Lull®

Illustrated Parts Manual

Models
644E-42
944E-42

SN 17569 thru 20123
& 0160002514 To Present

8990462

Revised
October 29, 2014

JLG®
An Oshkosh Corporation Company

EFFECTIVITY PAGE

February 4, 2005 - D - Revised Manual

November 10, 2005 - E - Revised Manual

October 9, 2007 - F - Revised Manual

July 2, 2008 - G - Revised Manual (Edited to B/M 644E - 0010626 Revision 28)
(Edited to B/M 944E - 0010627 Revision 26)

January 16, 2009 - H - Revised Manual

August 6, 2009 - I - Revised Manual

September 19, 2011 - J - Revised Manual, added Tier III information

February 2, 2012 - K - Revised Manual

April 26, 2012 - L - Revised Manual

December 21, 2012 - M - Revised Manual

July 30, 2013 - N - Revised Manual

January 30, 2014 - O - Revised Manual

October 29, 2014 - P - Revised Manual

TABLE OF CONTENTS

SECTION 1 - FRAME AND ATTACHING PARTS 11

FIGURE 1-1. MAIN FRAME COMPONENTS 644E (Prior to SN 0160048717, Excluding 0160045421) 12
FIGURE 1-2. MAIN FRAME COMPONENTS 944E (Prior to SN 0160041827) 14
FIGURE 1-3. MAIN FRAME COMPONENTS (644E SN 160048717 to Present, Including 0160045421; 944E SN 160041827 to Present) 18
FIGURE 1-4. ENGINE POD INSTALLATION (644E Prior to SN 0160048717, Excluding 0160045421; 944E Prior to SN 0160041827) 22
FIGURE 1-5. ENGINE POD INSTALLATION (644E SN 1600408717 to Present, Including 0160045421; 944E SN 160041827 to Present) 24
FIGURE 1-6. FENDER ASSEMBLY 28

SECTION 2 - BOOM 31

FIGURE 2-1. FIRST BOOM SECTION 644E 32
FIGURE 2-2. FIRST BOOM SECTION 944E 36
FIGURE 2-3. SECOND BOOM SECTION 644E 38
FIGURE 2-4. SECOND BOOM SECTION 944E 40
FIGURE 2-5. THIRD BOOM SECTION 644E 42
FIGURE 2-6. THIRD BOOM SECTION 944E 44
FIGURE 2-7. QUICK ATTACH 46
FIGURE 2-8. BOOM EXTEND CHAIN 48
FIGURE 2-9. BOOM RETRACT CHAIN 50
FIGURE 2-10. TRANSFER CARRIAGE INSTALLATION (644E Prior to SN 0160048717, Excluding 0160045421; 944E Prior to SN 0160041827) 52
FIGURE 2-11. TRANSFER CARRIAGE INSTALLATION (644E SN 0160048717 to Present, Including 0160045421; 944E SN 0160041827 to Present) 54

SECTION 3 - ATTACHMENTS 57

FIGURE 3-1. BUCKETS 58
FIGURE 3-2. TILT CARRIAGE (644E Prior to SN 0160034164; 944E Prior to SN 0160034158) 60
FIGURE 3-3. TILT CARRIAGE (644E SN 0160034164 through 0160051823; 944E SN 0160034158 through 0160051823) 62
FIGURE 3-4. TILT CARRIAGE (644E SN 0160051824 to Present; 944E SN 0160051824 to Present) 64
FIGURE 3-5. SIDE TILT CARRIAGE (Prior to SN 0160037794) 66
FIGURE 3-6. SIDE TILT CARRIAGE (SN 0160037794 to Present) 68
FIGURE 3-7. SWING CARRIAGE (Prior to SN 0160037794) 70
FIGURE 3-8. SWING CARRIAGE (SN 0160037794 to Present) 72
FIGURE 3-9. SHEET MATERIAL HANDLER (Prior to SN 0160037794) 74
FIGURE 3-10. SHEET MATERIAL HANDLER (SN 0160037794 to Present) 76
FIGURE 3-11. 3 FT TRUSS BOOM WITH WINCH 78
FIGURE 3-12. 10 FT TRUSS BOOM WITH WINCH (Prior to SN 0160037794) 80
FIGURE 3-13. 12 FT TRUSS BOOM WITH WINCH (SN 0160037794 to Present) 82
FIGURE 3-14. 10 FT TRUSS BOOM (Prior to SN 0160037794) 84
FIGURE 3-15. 12 & 15 FT TRUSS BOOM (Prior to SN 0160037794) 86
FIGURE 3-16. 50 IN SINGLE FORK POSITIONING CARRIAGE ASSEMBLY 88
FIGURE 3-17. 50 IN DUAL FORK POSITIONING CARRIAGE ASSEMBLY 90
FIGURE 3-18. FORK MOUNTED LIFTING HOOK 92
FIGURE 3-19. FORKS 94
FIGURE 3-20. FORK MOUNTED PLATFORM 96
FIGURE 3-21. CONCRETE BUCKET 100
FIGURE 3-22. SWEEPER ASSEMBLY 102
FIGURE 3-23. GRAPPLE BUCKET 104
FIGURE 3-24. FORK PIN LOCK INSTALLATION 106
FIGURE 3-25. 8 FT STANDARD MAST 108
FIGURE 3-26. 50 IN SIDE SHIFT CARRIAGE (644E SN 0160034164 to Present; 944E SN 0160034158 to Present) 112

SECTION 4 - ENGINE AND ATTACHING PARTS 115

FIGURE 4-1. ENGINE INSTALLATION (644E Prior to SN 0160048717, Excluding 01600045421; 944E Prior to SN 0160041827, Including 0160041849) 116
FIGURE 4-2. ENGINE INSTALLATION (644E SN 0160048717 to Present, Including 0160045421; 944E SN 0160041827 to Present) 120
FIGURE 4-3. ENGINE (SN 0160041827 through 0160044164) 124
FIGURE 4-4. ENGINE (SN 0160044254 through 0160049550) 126
FIGURE 4-5. ENGINE (644E SN 0160048717 to Present, Including 0160045421; 944E SN 0160049678 to Present) 128

TABLE OF CONTENTS

FIGURE 4-6. FUEL SYSTEM (644E Prior to SN 0160048717, Excluding 0160045421; 944E Prior to SN 0160041827).....130
FIGURE 4-7. FUEL SYSTEM (644E SN 0160048717 to Present, Including 0160045421; 944E SN 0160041827 to Present) 134
FIGURE 4-8. RADIATOR AND OIL COOLER MOUNTING (644E SN 17569 through 20123, SN 0160002514 through 0160009050; 944E SN 17569 through 20123, SN 0160002514 through 0160009044) 136
FIGURE 4-9. RADIATOR AND OIL COOLER MOUNTING (644E SN 0160009073 through 0160043356; 944E SN 0160009075 through 0160041823) 138
FIGURE 4-10. RADIATOR AND OIL COOLER MOUNTING (644E SN 0160048717 to Present, Including 0160045421; 944E SN 0160041827 to Present).....140
FIGURE 4-11. AIR CLEANER INSTALLATION (644E SN 17569 through 20123, SN 0160002514 through 0160011781; 944E SN 17569 through 20123, SN 0160002514 through 0160011778) 144
FIGURE 4-12. AIR CLEANER INSTALLATION (644E SN 0160011807 through 0160043356; 944E SN 0160011804 through 0160041823) 146
FIGURE 4-13. AIR CLEANER INSTALLATION (644E SN 0160048717 to Present, Including 0160045421; 944E SN 0160041827 to Present).....148
FIGURE 4-14. EXHAUST INSTALLATION (644E SN 17569 through 20123, SN 0160002514 through 0160009050; 944E SN 17569 through 20123, SN 0160002514 through 0160009044) 150
FIGURE 4-15. EXHAUST INSTALLATION (644E SN 0160009073 through 0160043356; 944E SN 0160009075 through 0160041823) 152
FIGURE 4-16. EXHAUST INSTALLATION (644E SN 0160048717 to Present, Including 01600405421; 944E SN 0160041827 to Present).....154

SECTION 5 - DRIVE TRAIN 157

FIGURE 5-1. DRIVE TRAIN COMPONENTS 158
FIGURE 5-2. FRONT AXLE 160
FIGURE 5-3. FRONT AXLE - INPUT (Prior to SN 0160039830, Excluding 0160036724, 0160036811, 0160036907 and 0160037012) 162
FIGURE 5-4. FRONT AXLE - INPUT (SN 0160039830 to Present, Including 0160036724, 0160036811, 0160036907 and 0160037012) 166
FIGURE 5-5. FRONT AXLE - INPUT (Prior to SN 0160040124, Excluding 0160034634, 0160036710, 0160036722, 0160036735 and 0160036738) 170
FIGURE 5-6. FRONT AXLE - INPUT (SN 0160040124 to Present, Including 0160034634, 0160036710, 0160036722, 0160036735 and 0160036738) 174
FIGURE 5-7. FRONT AXLE - LIMITED SLIP DIFFERENTIAL (644E Prior to SN 0160039830, Excluding 0160036724, 0160036811, 0160036907 and 0160037012; 944E Prior to SN 0160040124, Excluding 0160034634, 0160036710, 0160036722, 0160036735 and 0160036738) 178
FIGURE 5-8. FRONT AXLE - LIMITED SLIP DIFFERENTIAL (644E SN 0160039830 to Present, Including 0160036724, 0160036811, 0160036907 and 0160037012; 944E SN 0160040124 to Present, Including 0160034634, 0160036710, 0160036722, 0160036735 and 0160036738) 180
FIGURE 5-9. FRONT AXLE - AXLE CASING (644E Prior to SN 0160039830, Excluding 0160036724, 0160036811, 0160036907 and 0160037012; 944E Prior to SN 0160040124, Excluding 0160034634, 0160036710, 0160036722, 0160036735 and 0160036738) 182
FIGURE 5-10. FRONT AXLE - AXLE CASING (644E SN 0160039830 to Present, Including 0160036724, 0160036811, 0160036907 and 0160037012; 944E SN 0160040124 to Present, Including 0160034634, 0160036710, 0160036722, 0160036735 and 0160036738) 186
FIGURE 5-11. FRONT AXLE - M-DISC BRAKE (644E Prior to SN 0160039830, Excluding 0160036724, 0160036811, 0160036907 and 0160037012; 944E Prior to SN 0160040124, Excluding 0160034634, 0160036710, 0160036722, 0160036735 and 0160036738) 188
FIGURE 5-12. FRONT AXLE - M-DISC BRAKE (644E SN 0160039830 to Present, Including 0160036724, 0160036811, 0160036907 and 0160037012; 944E SN 0160040124 to Present, Including 0160034634, 0160036710, 0160036722, 0160036735 and 0160036738) 192
FIGURE 5-13. FRONT AXLE - BRAKE (644E Prior to SN 0160039830, Excluding 0160036724, 0160036811, 0160036907 and 0160037012; 944E Prior to SN 0160040124, Excluding 0160034634, 0160036710, 0160036722, 0160036735 and 0160036738) 194
FIGURE 5-14. FRONT AXLE - BRAKE (644E SN 0160039830 to Present, Including 0160036724, 0160036811, 0160036907 and 0160037012; 944E SN 0160040124 to Present, Including 0160034634, 0160036710, 0160036722, 0160036735 and 0160036738) 198
FIGURE 5-15. FRONT AXLE - JOINT HOUSING 644E (Prior to SN 0160039830, Excluding 0160036724, 0160036811, 0160036907 and 0160037012) 200
FIGURE 5-16. FRONT AXLE - JOINT HOUSING 944E (Prior to SN 0160040124, Excluding 0160034634, 0160036710, 0160036722, 0160036735 and 0160036738) 204
FIGURE 5-17. FRONT AXLE - JOINT HOUSING (644E SN 0160039830 to Present, Including 0160036724, 0160036811, 0160036907 and 0160037012; 944E SN 0160040124 to Present, Including 0160034634, 0160036710, 0160036722, 0160036735 and 0160036738) 206
FIGURE 5-18. FRONT AXLE - PLANETARY DRIVE (Prior to SN 0160039830, Excluding 0160036724, 0160036811, 0160036907 and 0160037012) 208

FIGURE 5-19. FRONT AXLE - PLANETARY DRIVE (Prior to SN 0160040124, Excluding 0160034634, 0160036710, 0160036722, 0160036735 and 0160036738) 210
FIGURE 5-20. FRONT AXLE - PLANETARY DRIVE (644E SN 0160039830 to Present, Including 0160036724, 0160036811, 0160036907 and 0160037012; 944E SN 0160040124 to Present, Including 0160034634, 0160036710, 0160036722, 0160036735 and 0160036738) 212
FIGURE 5-21. REAR AXLE 214
FIGURE 5-22. REAR AXLE - INPUT (644E Prior to SN 0160039830, Excluding 0160036724, 0160036811, 0160036907 and 0160037012; 944E Prior to SN 0160040124, Excluding 0160034634, 0160036710, 0160036722, 0160036735 and 0160036738) 216
FIGURE 5-23. REAR AXLE - INPUT (644E SN 0160039830 to Present, Including 0160036724, 0160036811, 0160036907 and 0160037012; 944E SN 0160040124 through 0160041823, Including 0160034634, 0160036710, 0160036722, 0160036735 and 0160036738) 220
FIGURE 5-24. REAR AXLE - INPUT 944E (SN 0160041827 to Present) 224
FIGURE 5-25. REAR AXLE - DIFFERENTIAL (644E Prior to SN 0160039830, Excluding 0160036724, 0160036811, 0160036907 and 0160037012; 944E Prior to SN 0160040124, Excluding 0160034634, 0160036710, 0160036722, 0160036735 and 0160036738) 228
FIGURE 5-26. REAR AXLE - DIFFERENTIAL (644E SN 0160039830 to Present, Including 0160036724, 0160036811, 0160036907 and 0160037012; 944E SN 0160040124 to Present, Including 0160034634, 0160036710, 0160036722, 0160036735 and 0160036738) 230
FIGURE 5-27. REAR AXLE - AXLE CASING (644E Prior to SN 0160039830, Excluding 0160036724, 0160036811, 0160036907 and 0160037012; 944E Prior to SN 0160040124, Excluding 0160034634, 0160036710, 0160036722, 0160036735 and 0160036738) 232
FIGURE 5-28. REAR AXLE - AXLE CASING (644E SN 0160039830 to Present, Including 0160036724, 0160036811, 0160036907 and 0160037012; 944E SN 0160040124 to Present, Including 0160034634, 0160036710, 0160036722, 0160036735 and 0160036738) 234
FIGURE 5-29. REAR AXLE - M-DISC BRAKE (644E Prior to SN 0160039830, Excluding 0160036724, 0160036811, 0160036907 and 0160037012; 944E Prior to SN 0160040124, Excluding 0160034634, 0160036710, 0160036722, 0160036735 and 0160036738) 236
FIGURE 5-30. REAR AXLE - M-DISC BRAKE (644E SN 0160039830 to Present, Including 0160036724, 0160036811, 0160036907 and 0160037012; 944E SN 0160040124 to Present, Including 0160034634, 0160036710, 0160036722, 0160036735 and 0160036738) 240
FIGURE 5-31. REAR AXLE - BRAKE (644E Prior to SN 0160039830, Excluding 0160036724, 0160036811, 0160036907 and 0160037012; 944E Prior to SN 0160040124, Excluding 0160034634, 0160036710, 0160036722, 0160036735 and 0160036738) 242
FIGURE 5-32. REAR AXLE - JOINT HOUSING (644E Prior to SN 0160039830, Excluding 0160036724, 0160036811, 0160036907 and 0160037012; 944E Prior to SN 0160040124, Excluding 0160034634, 0160036710, 0160036722, 0160036735 and 0160036738) 244
FIGURE 5-33. REAR AXLE - JOINT HOUSING (644E SN 0160039830 to Present, Including 0160036724, 0160036811, 0160036907 and 0160037012; 944E SN 0160040124 to Present, Including 0160034634, 0160036710, 0160036722, 0160036735 and 0160036738) 248
FIGURE 5-34. REAR AXLE - PLANETARY DRIVE (644E Prior to SN 0160039830, Excluding 0160036724, 0160036811, 0160036907 and 0160037012; 944E Prior to SN 0160040124, Excluding 0160034634, 0160036710, 0160036722, 0160036735 and 0160036738) 250
FIGURE 5-35. REAR AXLE - PLANETARY DRIVE (644E SN 0160039830 to Present, Including 0160036724, 0160036811, 0160036907 and 0160037012; 944E SN 0160040124 to Present, Including 0160034634, 0160036710, 0160036722, 0160036735 and 0160036738) 252
FIGURE 5-36. ZF TRANSMISSION 254
FIGURE 5-37. ZF TRANSMISSION - ENGINE CONNECTION AND INPUT SHAFTS 256
FIGURE 5-38. ZF TRANSMISSION - GEARBOX HOUSING AND COUPLING LOCATION 258
FIGURE 5-39. ZF TRANSMISSION - COUPLING GROUP 1 644E 260
FIGURE 5-40. ZF TRANSMISSION - COUPLING GROUP 1 944E 262
FIGURE 5-41. ZF TRANSMISSION - COUPLING GROUP 2 644E 264
FIGURE 5-42. ZF TRANSMISSION - COUPLING GROUP 2 944E 266
FIGURE 5-43. ZF TRANSMISSION - COUPLING GROUP 3 644E 268
FIGURE 5-44. ZF TRANSMISSION - COUPLING GROUP 3 944E 270
FIGURE 5-45. ZF TRANSMISSION - COUPLING GROUP 4 644E 272
FIGURE 5-46. ZF TRANSMISSION - COUPLING GROUP 4 944E 274
FIGURE 5-47. ZF TRANSMISSION - REVERSING GEAR GROUP CV 644E 276
FIGURE 5-48. ZF TRANSMISSION - REVERSING GEAR GROUP CV 944E 278
FIGURE 5-49. ZF TRANSMISSION - REVERSING GEAR GROUP CR 644E 280
FIGURE 5-50. ZF TRANSMISSION - REVERSING GEAR GROUP CR 944E 282
FIGURE 5-51. ZF TRANSMISSION - OIL PUMP 284
FIGURE 5-52. ZF TRANSMISSION - CONTROL UNIT 286
FIGURE 5-53. ZF TRANSMISSION - GEARSHIFT SYSTEM 288
FIGURE 5-54. ZF TRANSMISSION - TRANSFER BOX 290
FIGURE 5-55. DRIVE SHAFTS 292

TABLE OF CONTENTS

FIGURE 5-56. TIRE AND RIMS 644E (Prior to SN 0160039830, Excluding 0160036724, 0160036811, 0160036907 and 0160037012) 294
FIGURE 5-57. TIRE AND RIMS 644E (SN 0160039830 to Present, Including 0160036724, 0160036811, 0160036907 and 0160037012) 296
FIGURE 5-58. TIRE AND RIMS 298

SECTION 6 - CAB 301

FIGURE 6-1. CAB ASSEMBLY 302
FIGURE 6-2. SOFT CAB ENCLOSURE 304
FIGURE 6-3. CAB GLASS 306
FIGURE 6-4. DOOR ASSEMBLY 308
FIGURE 6-5. OPERATOR'S COMPARTMENT - INNER PANELS 312
FIGURE 6-6. OPERATOR'S SEAT (644E SN 17569 through 20123, SN 0160002514 through 0160013109; 944E SN 17569 through 20123, SN 0160002514 through 0160013106) 316
FIGURE 6-7. OPERATOR'S SEAT (644E SN 0160013127 to Present; 944E SN 0160013131 to Present) 318
FIGURE 6-8. REAR WINDOW (644E SN 17569 through 20123, SN 0160002514 through 0160009816; 944E SN 17569 through 20123, SN 0160002514 through 0160009818) 320
FIGURE 6-9. REAR WINDOW (644E SN 0160009474 to Present; 944E SN 0160009839 to Present) 322
FIGURE 6-10. FRONT WINDSHIELD WIPER ASSEMBLY 324
FIGURE 6-11. SKYLIGHT WIPER ASSEMBLY 326
FIGURE 6-12. WINDSHIELD GUARD 328
FIGURE 6-13. MIRRORS 330
FIGURE 6-14. HEATER SYSTEM 332
FIGURE 6-15. AIR CONDITIONING SYSTEM 334
FIGURE 6-16. VENTILATION HOSES AND VENTS 338

SECTION 7 - CONTROLS 341

FIGURE 7-1. SERVICE BRAKE AND PEDAL ASSEMBLY 342
FIGURE 7-2. THROTTLE GROUP INSTALLATION 644E (SN 17569 through 20115, SN 0160002519 through 0160003672, Excluding 19557 and 0160003489) 344
FIGURE 7-3. THROTTLE GROUP INSTALLATION 644E (SN 0160003690 through 0160043356, Including 19557, 20118 and 0160003489) 346
FIGURE 7-4. THROTTLE GROUP INSTALLATION 944E (SN 17569 through 20123, SN 0160002514 through 0160016057) 348
FIGURE 7-5. THROTTLE GROUP INSTALLATION 944E (SN 0160016083 through 0160041849, Excluding 0160041827) 350
FIGURE 7-6. THROTTLE GROUP INSTALLATION (644E SN 0160048717 to Present, Including 0160045421; 944E SN 0160041827 to Present, Excluding 0160041849) 352
FIGURE 7-7. STEERING COLUMN 354
FIGURE 7-8. FRAME LEVEL CONTROL VALVE ASSEMBLY 356
FIGURE 7-9. JOYSTICK CONTROL VALVE ASSEMBLY 358
FIGURE 7-10. JOYSTICK CONTROL VALVE ASSEMBLY, (SINGLE) 360

SECTION 8 - HYDRAULIC CIRCUITS 363

FIGURE 8-1. PUMP, SUCTION AND RETURN (644E SN 17569 through 20123, SN 0160002514 through 0160003108; 944E SN 17569 through 20123, SN 0160002514 through 0160003140) 364
FIGURE 8-2. PUMP, SUCTION AND RETURN (644E SN 0160003109 through 644E; 944E SN 0160003141 through 944E) 368
FIGURE 8-3. PUMP, SUCTION AND RETURN (644E SN 0160048717 to Present, Including 0160045421; 944E SN 0160041827 to Present) 372
FIGURE 8-4. SERVICE AND PARKING BRAKE 376
FIGURE 8-5. EXTEND/RETRACT AND LIFT/LOWER (644E SN 17569 through 20118, SN 0160002519 through 644E; 944E SN 18554 through 20123, SN 0160002514 through 944E) 380
FIGURE 8-6. EXTEND/RETRACT AND LIFT/LOWER (644E SN 0160003604 to Present; 944E SN 0160003602 to Present) 384
FIGURE 8-7. ATTACHMENT TILT AND AUXILIARY (644E SN 17569 through 19385; 944E SN 17569 through 19385) 388
FIGURE 8-8. ATTACHMENT TILT AND AUXILIARY (644E SN 19386 through 20118, SN 0160002519 through 0160003108; 944E SN 19386 through 20123, SN 0160002514 through 0160003140) 392
FIGURE 8-9. ATTACHMENT TILT AND AUXILIARY (644E SN 0160003109 to Present; 944E SN 0160003141 to Present) 396
FIGURE 8-10. FRAME LEVEL/STABIL-TRAK (SN 17569 through 18460) 400
FIGURE 8-11. FRAME LEVEL/STABIL-TRAK (SN 18461 through 20118, SN 0160002519 to Present) 402
FIGURE 8-12. TILT COMPENSATION CYLINDER (644E SN 17569 through 20118, SN 0160002519 through 0160003583, SN 0160002514 through 0160003587; 944E SN 18554 through 20123) 404
FIGURE 8-13. TILT COMPENSATION CYLINDER (644E SN 0160003604 to Present; 944E SN 0160003602 to Present) 406
FIGURE 8-14. TRANSFER CARRIAGE 408
FIGURE 8-15. STEERING CYLINDER 410
FIGURE 8-16. FRONT JOYSTICK 414
FIGURE 8-17. REAR JOYSTICK (SN 17569 through 18460) 416

FIGURE 8-18. REAR JOYSTICK (644E SN 18461 through 20123, SN 0160002514 to Present; 944E SN 18554 through 20123, SN 0160002514 to Present) 418
FIGURE 8-19. SINGLE JOYSTICK 420
FIGURE 8-20. TRANSMISSION OIL COOLER ASSEMBLY (644E Prior to SN 0160048717, Excluding 01600045421; 944E Prior to SN 0160041827)..... 422
FIGURE 8-21. TRANSMISSION OIL COOLER ASSEMBLY (644E SN 0160048717 to Present, Including 0160045421; 944E SN 0160041827 to Present) 424
FIGURE 8-22. OIL COOLER (644E Prior to SN 0160048717, Excluding 0160045421; 944E Prior to SN 0160041827) 426
FIGURE 8-23. OIL COOLER (644E SN 0160048717 to Present, Including 0160045421; 944E SN 0160041827 to Present)..... 428

SECTION 9 - HYDRAULIC COMPONENTS 431

FIGURE 9-1. EXTEND/RETRACT CYLINDER (644E SN 17569 through 20123, SN 0160002514 through 0160005325, Excluding 0160004236 and 0160004237)..... 432
FIGURE 9-2. EXTEND/RETRACT CYLINDER (644E SN 0160005784 to Present, Including 0160004236 and 0160004237).... 434
FIGURE 9-3. EXTEND/RETRACT CYLINDER (944E SN 18554 through 20123, SN 0160002514 through 0160005729) 436
FIGURE 9-4. EXTEND/RETRACT CYLINDER (SN 0160005814 to Present)..... 438
FIGURE 9-5. LIFT CYLINDER 440
FIGURE 9-6. LIFT CYLINDER (944E SN 18554 through 20123, SN 0160002514 through 0160005729) 442
FIGURE 9-7. LIFT CYLINDER 944E (SN 0160005814 to Present)..... 444
FIGURE 9-8. ATTACHMENT TILT CYLINDER 644E..... 446
FIGURE 9-9. ATTACHMENT TILT CYLINDER 944E..... 448
FIGURE 9-10. FRAME LEVEL CYLINDER 450
FIGURE 9-11. FRAME LEVEL CYLINDER (944E SN 17569 through 20123, SN 0160002514 through 0160004849, Excluding 0160004238 and 0160004239)..... 452
FIGURE 9-12. FRAME LEVEL CYLINDER (944E SN 0160004927 to Present, Including 0160004238 and 0160004239)..... 454
FIGURE 9-13. STABIL-TRAK CYLINDER..... 456
FIGURE 9-14. STABIL-TRAK CYLINDER (944E SN 17569 through 20123, SN 0160002514 through 0160004849, Excluding 0160004238 and 0160004239)..... 458
FIGURE 9-15. STABIL-TRAK CYLINDER (944E SN 0160004927 to Present, Including 0160004238 and 0160004239) 460
FIGURE 9-16. TILT COMPENSATION CYLINDER 644E 462
FIGURE 9-17. TILT COMPENSATION CYLINDER 944E 464
FIGURE 9-18. TRANSFER CYLINDER..... 466
FIGURE 9-19. GEAR PUMP (644E Prior to SN 0160048717, Excluding 0160045421) 468
FIGURE 9-20. GEAR PUMP (Prior to SN 0160041827)..... 470
FIGURE 9-21. GEAR PUMP (SN 0160041827 through 0160046530) 472
FIGURE 9-22. GEAR PUMP (644E SN 0160048717 to Present, Including 0160045421; 944E SN 0160046623 to Present) 474
FIGURE 9-23. MAIN CONTROL VALVE (644E SN 17569 through 20123, SN 0160002514 through 0160003074; 944E SN 17569 through 20123, SN 0160002514 through 0160003090)..... 476
FIGURE 9-24. MAIN CONTROL VALVE (644E SN 0160003088 to Present; 944E SN 0160003092 to Present)..... 480
FIGURE 9-25. PILOT SELECT VALVE ASSEMBLY, (DUAL JOYSTICK)..... 482
FIGURE 9-26. PILOT SELECT VALVE ASSEMBLY, (SINGLE JOYSTICK) 484
FIGURE 9-27. ACCUMULATOR CHARGE VALVE ASSEMBLY 486
FIGURE 9-28. STABIL-TRAK CYLINDER VALVES..... 490
FIGURE 9-29. AUXILIARY DUMP VALVE ASSEMBLIES (644E SN 19402 through 20118, SN 0160002519 through 0160003074; 944E SN 19402 through 20123, SN 0160002514 through 0160003072) 492
FIGURE 9-30. VALVE TRAY ASSEMBLY, (DUAL JOYSTICK) (SN 17569 through 19401)..... 494
FIGURE 9-31. VALVE TRAY ASSEMBLY, (DUAL JOYSTICK) (644E SN 18065 through 20123, SN 0160002514 through 0160003074; 944E SN 18065 through 20123, SN 0160002514 through 0160003072) 496
FIGURE 9-32. VALVE TRAY ASSEMBLY, (DUAL JOYSTICK) (644E SN 0160003088 to Present; 944E SN 0160003086 to Present)..... 498
FIGURE 9-33. VALVE TRAY ASSEMBLY, (SINGLE JOYSTICK) (644E SN 18065 through 20123, SN 0160002514 through 0160003074; 944E SN 18065 through 20123, SN 0160002514 through 0160003072) 500
FIGURE 9-34. VALVE TRAY ASSEMBLY, (SINGLE JOYSTICK) (644E SN 0160003088 to Present; 944E SN 0160003086 to Present)..... 502
FIGURE 9-35. HYDRAULIC TANK ASSEMBLY (644E Prior to SN 0160048717, Excluding 0160045421; 944E SN 0160041827 to Present)..... 504
FIGURE 9-36. HYDRAULIC TANK ASSEMBLY (644E SN 0160048717 to Present, Including 0160045421; 944E SN 0160041827 to Present)..... 508
FIGURE 9-37. ACCUMULATORS ASSEMBLY..... 510
FIGURE 9-38. DIAGNOSTIC PRESSURE TAPS..... 512
FIGURE 9-39. SIDE TILT CARRIAGE CYLINDER..... 514
FIGURE 9-40. 72IN 90 SWING CARRIAGE CYLINDER..... 516
FIGURE 9-41. GRAPPLE BUCKET CYLINDER..... 518
FIGURE 9-42. 50 IN SIDE SHIFT CARRIAGE CYLINDER (644E SN 0160034164 to Present; 944E SN 0160034158 to Present) 520

TABLE OF CONTENTS

SECTION 10 - ELECTRICAL....523

FIGURE 10-1. BATTERY AND VEHICLE GROUND CABLES (Prior to SN 01600487817, Excluding 0160045421) 524
FIGURE 10-2. BATTERY AND VEHICLE GROUND CABLES (Prior to SN 0160041827)....526
FIGURE 10-3. BATTERY AND VEHICLE GROUND CABLES (644E SN 0160048717 to Present, Including 0160045421; 944E SN 0160041827 to Present)....528
FIGURE 10-4. POWER COMPONENTS 644E (SN 17569 through 20115, SN 0160002519 through 0160003672, Excluding 19557 and 0160003489) 532
FIGURE 10-5. POWER COMPONENTS 644E (SN 0160003690 through 0160043356, Including 19557, 20118 and 0160003489) 534
FIGURE 10-6. POWER COMPONENTS 944E (Prior to SN 0160041827) 536
FIGURE 10-7. POWER COMPONENTS (644E SN 0160048717 to Present, Including 0160045421; 944E SN 0160041827 to Present)....540
FIGURE 10-8. OPEN CAB ELECTRICAL COMPONENTS (SN 17569 through 19041) 542
FIGURE 10-9. OPEN CAB ELECTRICAL COMPONENTS (644E SN 19042 through 20123, SN 0160002514 through 0160034284; 944E SN 19042 through 20123, SN 0160002514 through 0160034278) 544
FIGURE 10-10. OPEN CAB ELECTRICAL COMPONENTS (644E SN 0160034285 to Present; 944E SN 0160034279 to Present) 548
FIGURE 10-11. CLOSED CAB ELECTRICAL COMPONENTS....550
FIGURE 10-12. FUSES, RELAYS AND FLASHER BOX (644E SN 19042 through 20123, SN 0160002514 through 0160034284; 944E SN 19042 through 20123, SN 0160002514 through 0160034278)....552
FIGURE 10-13. FUSES, RELAYS AND FLASHER BOX (644E SN 0160034285 to Present; 944E SN 0160034279 to Present) 556
FIGURE 10-14. SENSOR COMPONENTS....560
FIGURE 10-15. CONTROL COMPONENTS 564
FIGURE 10-16. TRANSMISSION COMPONENTS....566
FIGURE 10-17. TRANSMISSION HARNESS 568
FIGURE 10-18. ENGINE HARNESS (644E SN 0160048717 to Present, Including 0160045421; 944E SN 0160041827 to Present) 570
FIGURE 10-19. ECM CAB HARNESS (644E SN 0160048717 to Present, Including 0160045421; 944E SN 0160041827 to Present)....572
FIGURE 10-20. FAN RELAY HARNESS 574
FIGURE 10-21. JUMPER HARNESS....576

SECTION 11 - DECALS 579

FIGURE 11-1. DECALS (644E Prior to SN 0160048717, Excluding 0160045421; 944E Prior to SN 0160041827) 580
FIGURE 11-2. DECALS (644E SN 0160048717 to Present, Including 0160045421; 944E SN 0160041827 to Present)....584

SECTION 12 - OPTIONS....589

FIGURE 12-1. ROADLIGHT INSTALLATION 590
FIGURE 12-2. WORKLIGHT INSTALLATION 596
FIGURE 12-3. BEACON AND STROBE LIGHT....600
FIGURE 12-4. SWING CARRIAGE CYLINDER ASSEMBLY ROSENBOOM....602
FIGURE 12-5. SWING CARRIAGE CYLINDER ASSEMBLY ENERGY 604
FIGURE 12-6. 48IN, 50IN, 60IN & 72IN SIDE TILT CARRIAGE CYLINDER....606
FIGURE 12-7. COLD START OPTION 608

SECTION 13 - RECOMMENDED SPARE PARTS....611

FIGURE 13-1. RECOMMENDED SPARE PARTS....612

PART NUMBER INDEX....617

SECTION 1 - FRAME AND ATTACHING PARTS

SECTION 1 - FRAME AND ATTACHING PARTS

FIGURE 1-1. MAIN FRAME COMPONENTS 644E (Prior to SN 0160048717, Excluding 0160045421)

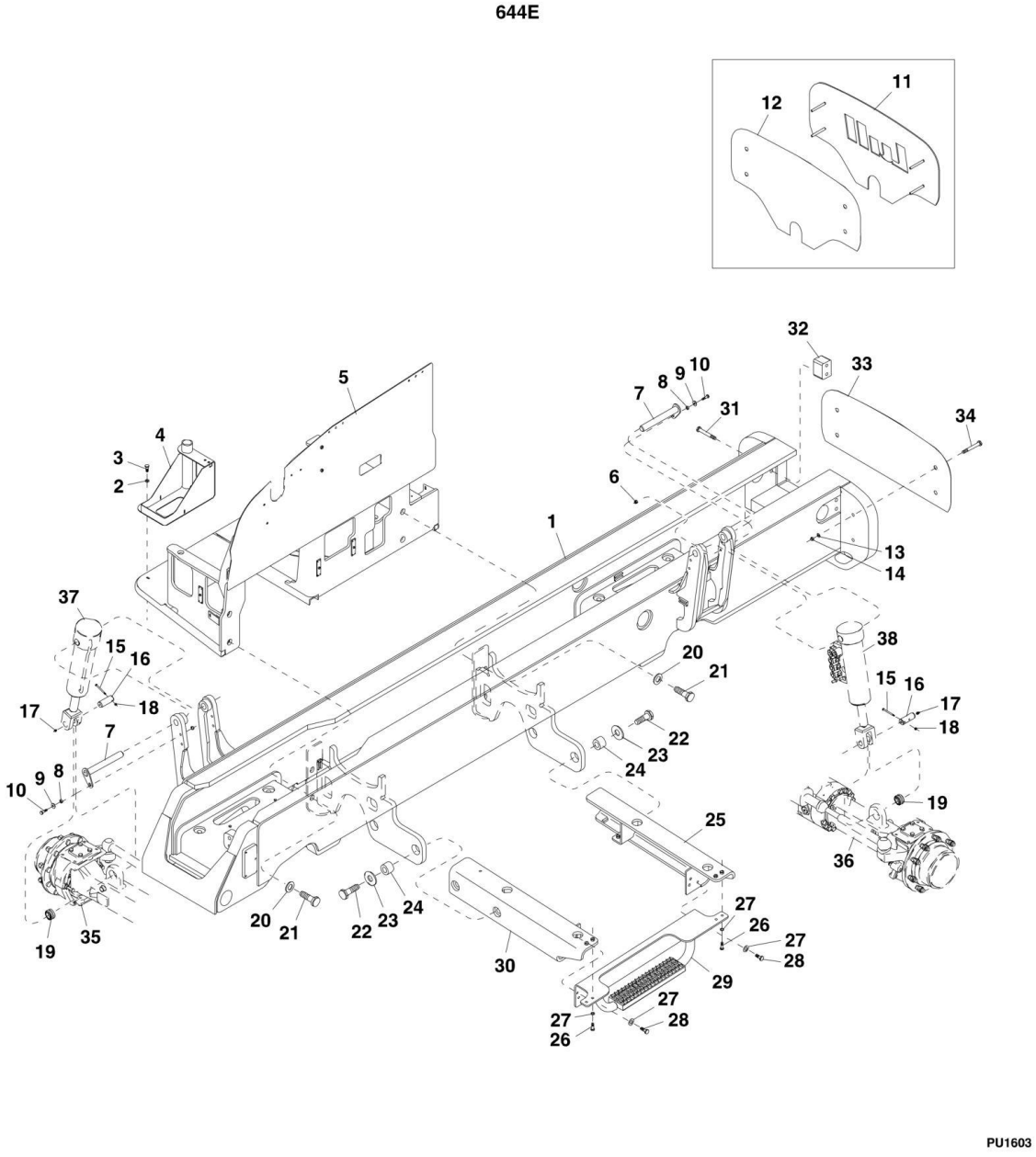

FIGURE 1-1. MAIN FRAME COMPONENTS 644E (Prior to SN 0160048717, Excluding 0160045421)

ITEM	PART NUMBER	QTY	DESCRIPTION	REV
1	N.S.S.	1	MAIN FRAME	
2	8307221	3	PLAIN WASHER, 10mm	
3	8303755	3	HEX HD CAPSCREW, 10X1.5X30mm, GR8.8	
4	7300534	1	LOWER BATTERY SUPPORT	
5	7300260	1	ENGINE MOUNT FRAME	
6	8310625	2	HEX LOCKNUT, 12-1.75mm	
7	7301149	2	CYLINDER MOUNTING PIN	
8	7139886	2	PIN RETAINER SPACER	
9	8310657	2	PLAIN WASHER,12 mm	
10	8310656	2	HEX HD CAPSCREW, 12-1.75X60mm, GR8.8	
11	7301096	NLA	LULL LOGO PLATE, (no longer available, use items 33 & 34 for replacement)	
12	7301098	NLA	LOGO BACKUP PLATE, (no longer available, use items 33 & 34 for replacement)	
13	8307220	4	FLAT WASHER, 12mm	
14	8310625	4	HEX LOCKNUT, 12-1.75mm	
15	8310424	2	HEX HD CAPSCREW, 8-1.25X90mm, GR8.8	
16	7137142	2	CYLINDER PIN	
17	8520001	2	LUBE FITTING, 1/8	
18	8305654	2	HEX LOCKNUT, M8-1.25	
19	8050001	2	SELF ALIGN BEARING, 1.4995X1.307	
20	8310539	4	PLAIN WASHER, 1.25-1.375-2.5	
21	0683020	4	HEX HD CAPSCREW, 1.25-7-2.5, GR8	
22		Ref	HEX HD CAPSCREW, 1.25-7-4, GR8, (See CAB SECTION for Breakdown)	
23		Ref	CAB SUPPORT WASHER, (See CAB SECTION for Breakdown)	
24		Ref	CAB MOUNT SHEER PIN, (See CAB SECTION for Breakdown)	
25		Ref	CAB REAR SUPPORT, (See CAB SECTION for Breakdown)	
26		Ref	HEX HD CAPSCREW, 12-1.75X40mm, GR8.8, (See CAB SECTION for Breakdown)	
27		Ref	PLAIN WASHER, 0.5, (See CAB SECTION for Breakdown)	
28		Ref	HEX HD CAPSCREW, 12-1.75X40mm, GR8.8, (See CAB SECTION for Breakdown)	
29		Ref	CAB MOUNT STEP, (See CAB SECTION for Breakdown)	
30		Ref	CAB FRONT SUPPORT, (See CAB SECTION for Breakdown)	
31	8321701	4	HEX HD CAPSCREW, 20-2.5X150mm, GR8.8	
32	7300754	2	TC STOP BLOCK	
33	3575924	1	FRAME COVER PLATE	
34	10704216	4	HEX HD CAPSCREW, 12-1.75X110mm, GR8.8	
35		Ref	FRONT AXLE, (See DRIVE TRAIN SECTION for Breakdown)	
36		Ref	REAR AXLE, (See DRIVE TRAIN SECTION for Breakdown)	
37		Ref	FRAME SWAY CYLINDER, (See HYDRAULIC COMPONENTS SECTION for Breakdown)	
38		Ref	STABIL-TRAK CYLINDER, (See HYDRAULIC COMPONENTS SECTION for Breakdown)	

FIGURE 1-2. MAIN FRAME COMPONENTS 944E (Prior to SN 0160041827)

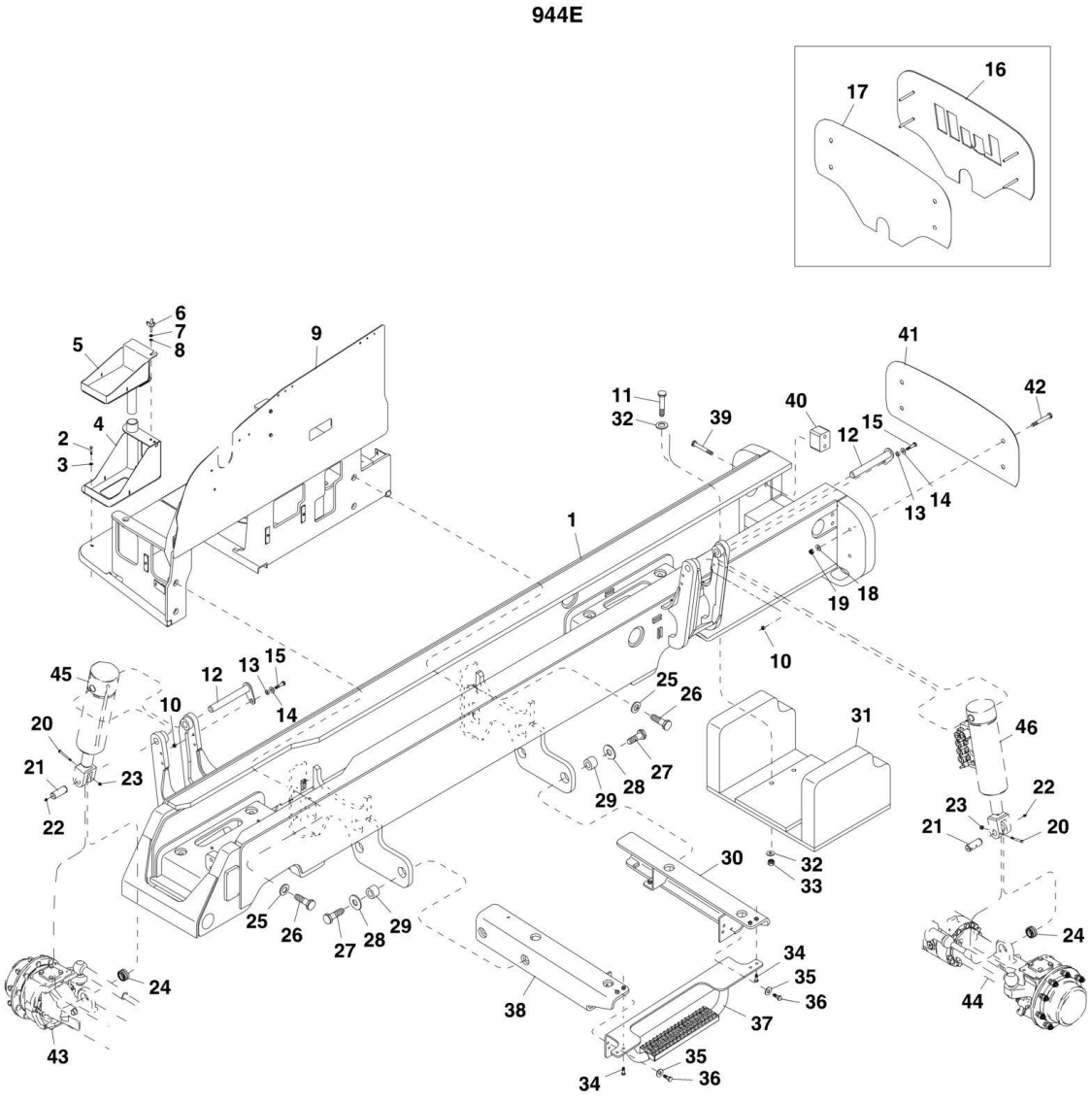

FIGURE 1-2. MAIN FRAME COMPONENTS 944E (Prior to SN 0160041827)

ITEM	PART NUMBER	QTY	DESCRIPTION	REV
1	N.S.S.	1	MAIN FRAME	
2	8303755	3	HEX HD CAPSCREW, 10X1.5X30mm, GR8.8	
3	8307221	3	PLAIN WASHER, M10	
4	7300534	1	LOWER BATTERY SUPPORT	
5	7300535	1	UPPER BATTERY SUPPORT	
6	8310709	1	CLAMP KNOB STUD, 10-1.5X40mm	
7	8307221	1	PLAIN WASHER, 10mm	
8	8310070	1	PUSH NUT, 3/8X13/16	
9	7300448	1	ENGINE MOUNT FRAME	
10	8310625	2	HEX LOCKNUT, 12-1.75mm	
11	8310713	4	HEX HD CAPSCREW, 20-2.5X130mm, GR8.8	
12	7301149	2	CYLINDER MOUNTING PIN	
13	7139886	2	PIN RETAINER SPACER	
14	8310657	2	PLAIN WASHER, 12mm	
15	8310656	2	HEX HD CAPSCREW, 12-1.75X60mm, GR8.8	
16	7301096	NLA	LULL LOGO PLATE, (no longer available, use items 41 & 42 for replacement)	
17	7301098	NLA	LOGO BACKUP PLATE, (no longer available, use items 41 & 42 for replacement)	
18	8307220	4	FLAT WASHER, 12mm	
19	8310625	4	HEX LOCKNUT, 12-1.75mm	
20	8310424	2	HEX HD CAPSCREW, 8-1.25X90mm, GR8.8	
21	7137142	2	CYLINDER PIN	
22	8520001	2	LUBE FITTING, 1/8	
23	8305654	2	HEX LOCKNUT, 8-1.25mm	
24	8050001	2	SELF ALIGN BEARING, 1.4995X1.307	
25	8310539	4	PLAIN HARDENED WASHER, 1.25-1.375-2.5	
26	0683020	4	HEX HD CAPSCREW, 1.25-7-2.5, GR8	
27		Ref	HEX HD CAPSCREW, 1.25-7- 4, GR8, (See CAB SECTION for Breakdown)	
28		Ref	CAB SUPPORT WASHER, (See CAB SECTION for Breakdown)	
29		Ref	CAB MOUNT SHEER PIN, (See CAB SECTION for Breakdown)	
30		Ref	CAB REAR SUPPORT, (See CAB SECTION for Breakdown)	
31	7301516	1	COUNTERWEIGHT	
32	8310426	8	PLAIN WASHER, 20mm	
33	8305655	4	HEX LOCKNUT, 20-2.5mm	
34		Ref	HEX HD CAPSCREW, 12-1.75X35mm, GR8.8, (See CAB SECTION for Breakdown)	
35		Ref	PLAIN WASHER, 0.500, (See CAB SECTION for Breakdown)	
36		Ref	HEX HD CAPSCREW, 12-1.75X40mm, GR8.8, (See CAB SECTION for Breakdown)	
37		Ref	CAB MOUNT STEP, (See CAB SECTION for Breakdown)	
38		Ref	CAB FRONT SUPPORT, (See CAB SECTION for Breakdown)	
39	8321701	4	HEX HD CAPSCREW, 20-2.50X150mm, GR8.8	
40	7300754	2	TC STOP BLOCK	
41	3575924	1	FRAME COVER PLATE	
42	10704216	4	HEX HD CAPSCREW, 12-1.75X110mm, GR8.8	
43		Ref	FRONT AXLE, (See DRIVE TRAIN SECTION for Breakdown)	
44		Ref	REAR AXLE, (See DRIVE TRAIN SECTION for Breakdown)	
45		Ref	FRAME SWAY CYLINDER, (See HYDRAULIC COMPONENTS SECTION for Breakdown)	

SECTION 1 - FRAME AND ATTACHING PARTS

ITEM	PART NUMBER	QTY	DESCRIPTION	REV
46		Ref	STABIL-TRAK CYLINDER, (See HYDRAULIC COMPONENTS SECTION for Breakdown)	

FIGURE 1-3. MAIN FRAME COMPONENTS (644E SN 160048717 to Present, Including 0160045421; 944E SN 160041827 to Present)

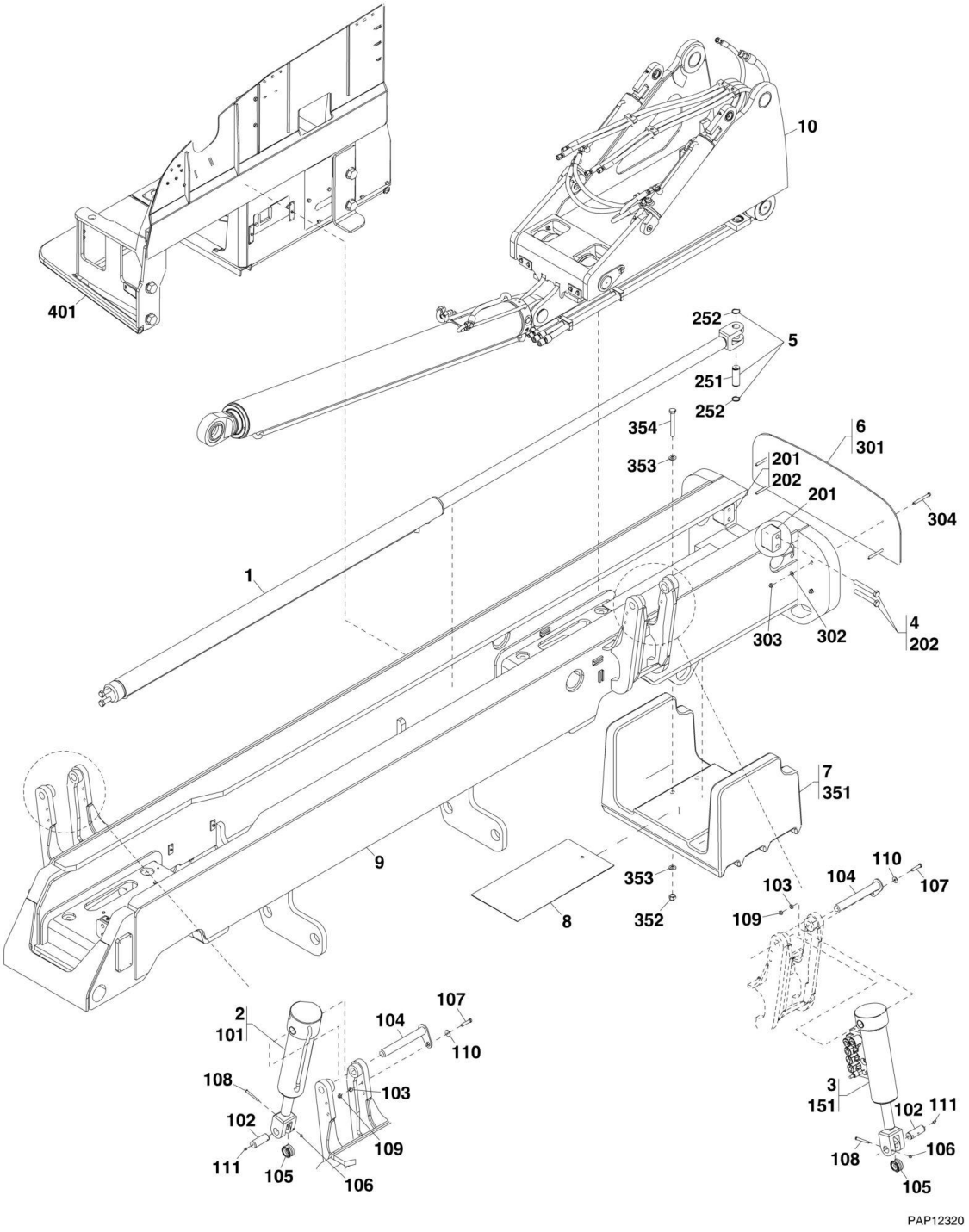

FIGURE 1-3. MAIN FRAME COMPONENTS (644E SN 160048717 to Present, Including 0160045421; 944E SN 160041827 to Present)

ITEM	PART NUMBER	QTY	DESCRIPTION	REV
	1001143083	Ref	FRAME INSTALLATION, (644E), (not available to order, see items 1 thru 6 & 8 thru 10 for service)	A
	1001120707	Ref	FRAME INSTALLATION, (944E), (not available to order, see items 1 thru 10 for service)	A
1		Ref	TRANSFER CYLINDER, (See HYDRAULIC COMPONENTS SECTION for Breakdown)	
2	7300726	Ref	FRAME LEVEL INSTALLATION, (not available to order, see items 101 thru 111 for service)	E
3	7300727	Ref	STABIL-TRAK CYLINDER INSTALLATION, (not available to order, see items 102 thru 111 & 151 for service)	D
4	7300753	Ref	TRANSFER CYLINDER STOP INSTALLATION, (not available to order, see items 201 & 202 for service)	AD
5	7300859	Ref	TRANSFER CYLINDER MOUNTING INSTALLATION, (not available to order, see items 251 & 252 for service)	AD
6	7301097	Ref	FRAME COVER INSTALLATION, (not available to order, see items 301 thru 304 for service)	D
7	7301146	Ref	COUNTERWEIGHT INSTALLATION, (944E), (not available to order, see items 351 thru 354 for service)	B
8	7301222	1	HOSE TRAY ASSEMBLY	E
8	7301868	AR	1IN ADHESIVE TAPE	
9	N.S.S.	1	WELDMENT	
10		Ref	TRANSFER CARRIAGE INSTALLATION, (See BOOM SECTION for Breakdown)	
101		Ref	FRAME LEVEL CYLINDER, (See HYDRAULIC COMPONENTS SECTION for Breakdown)	
102	7137142	2	PIN	
103	7139886	2	PIN SPACER	
104	7301149	2	PIN	
105	8050001	2	BEARING	
106	8305654	2	HEX NUT, M8X1.25	
107	8310656	2	HEX HD CAPSCREW, M12X60, GR8.8, (torque to 59-106 Nm/44-78 lb-ft)	
108	8310424	2	HEX HD CAPSCREW, M8X90, GR8.8, (torque to 17-31 Nm/13-23 lb-ft)	
109	8310625	2	HEX NUT, M12X1.75	
110	8310657	2	WASHER, 12mm	
111	8520001	2	GREASE FITTING	
151		Ref	STABIL-TRAK CYLINDER, (See HYDRAULIC COMPONENTS SECTION for Breakdown)	
201	7300754	2	TC STOP BLOCK	
202	8321701	4	HEX HD CAPSCREW, M20X150, GR8.8	
251	7300503	1	PIN	
252	8630026	2	RETAINING RING	
301	3575924	1	FRAME COVER PLATE	
302	8307220	4	WASHER, 12mm	
303	8310625	4	HEX NUT, M12X1.75	
304	10704216	4	HEX HD CAPSCREW, M12X110, GR8.8	
351	1001094782	1	COUNTERWEIGHT, (944E)	
352	8305655	4	HEX NUT, M20X2.5, (torque to 295-530 Nm/218-391 lb-ft), (944E)	
353	8310426	8	WASHER, 20mm, (944E)	
354	8321701	4	HEX HD CAPSCREW, M20X150, GR8.8, (944E)	
401		Ref	ENGINE POD INSTALLATION, (See ENGINE POD INSTALLATION	

SECTION 1 - FRAME AND ATTACHING PARTS

ITEM	PART NUMBER	QTY	DESCRIPTION	REV
			for Breakdown)	

FIGURE 1-4. ENGINE POD INSTALLATION (644E Prior to SN 0160048717, Excluding 0160045421; 944E Prior to SN 0160041827)

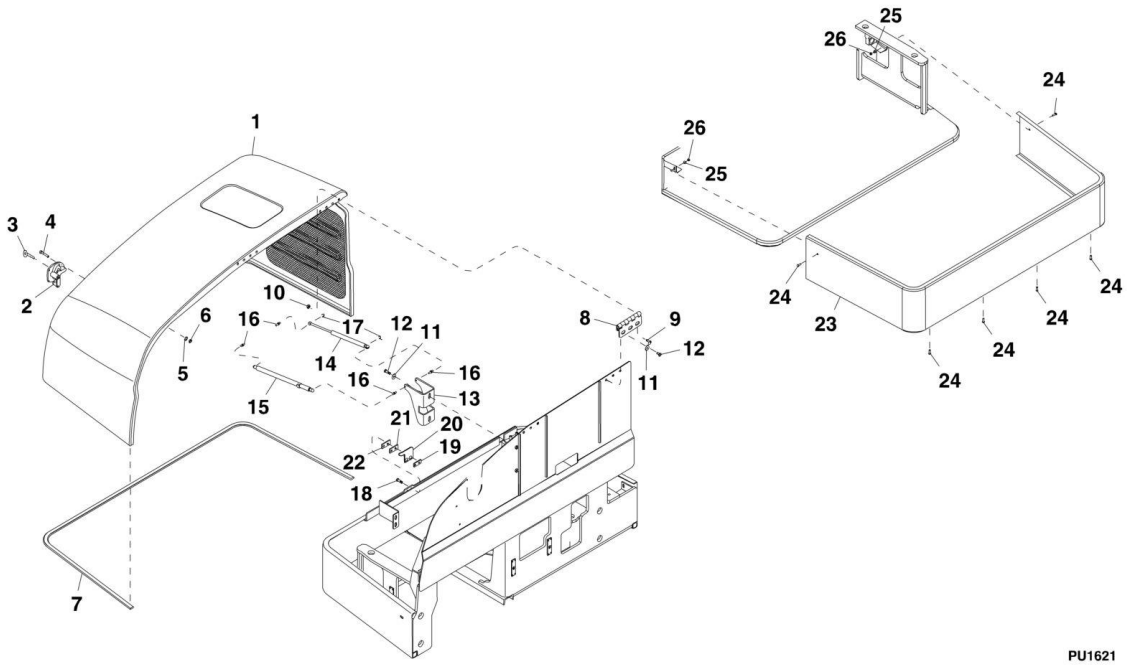

FIGURE 1-4. ENGINE POD INSTALLATION (644E Prior to SN 0160048717, Excluding 0160045421; 944E Prior to SN 0160041827)

ITEM	PART NUMBER	QTY	DESCRIPTION	REV
1	7300609	1	HOOD ASSEMBLY	
2	7300364	1	HOOD LATCH ASSEMBLY, (includes item 3)	
3	8342813	1	HOOD LATCH KEY	
4	8310664	4	SOCKET HD CAPSCREW, M4X25, GR12.9	
5	8310491	4	PLAIN WASHER, 4mm	
6	3290405	4	TORX HEX NUT, M4-0.7	
7	8277172	1	TRIM SEAL	
8	7300630	2	HOOD HINGE	
9	8310614	8	FLANGE SOCKET HEX HD CAPSCREW, M10X30	
10	8305038	8	HEX NUT, M10X1.5	
11	8310621	8	FEND WASHER, 10-5/16-18mm, THD	
12	8303784	8	HEX HD CAPSCREW, M10X20, GR8.8	
13	7300687	1	GAS STRUT BRACKET	
14	8702162	1	GAS STRUT SPRING, 10X22, 550N	
15	8702163	1	LOCKING GAS STRUT SPRING, 10X22, 550N	
16	8340038	4	BALL STUD, 10mm, 5/16-18	
17	8702164	2	SPRING CLIP RETAINER	
18	8303777	2	HEX HD CAPSCREW, M10X35, GR8.8	
19	7301312	1	HOOD LATCH NUT PLATE	
20	7301371	1	LATCH CATCH PLATE	
21	7301373	1	LATCH CATCH PLATE, 7 GA SPACER	
22	7301372	1	HOOD LATCH NUT PLATE	
23	7300370	1	ENGINE MOUNT SKIRT	
24	8310693	6	HEX FLANGE SCREW, M8X25, GR8.8	
25	8307203	2	WASHER	
26	8305654	2	HEX LOCKNUT, M8X1.25	

FIGURE 1-5. ENGINE POD INSTALLATION (644E SN 1600408717 to Present, Including 0160045421; 944E SN 160041827 to Present)

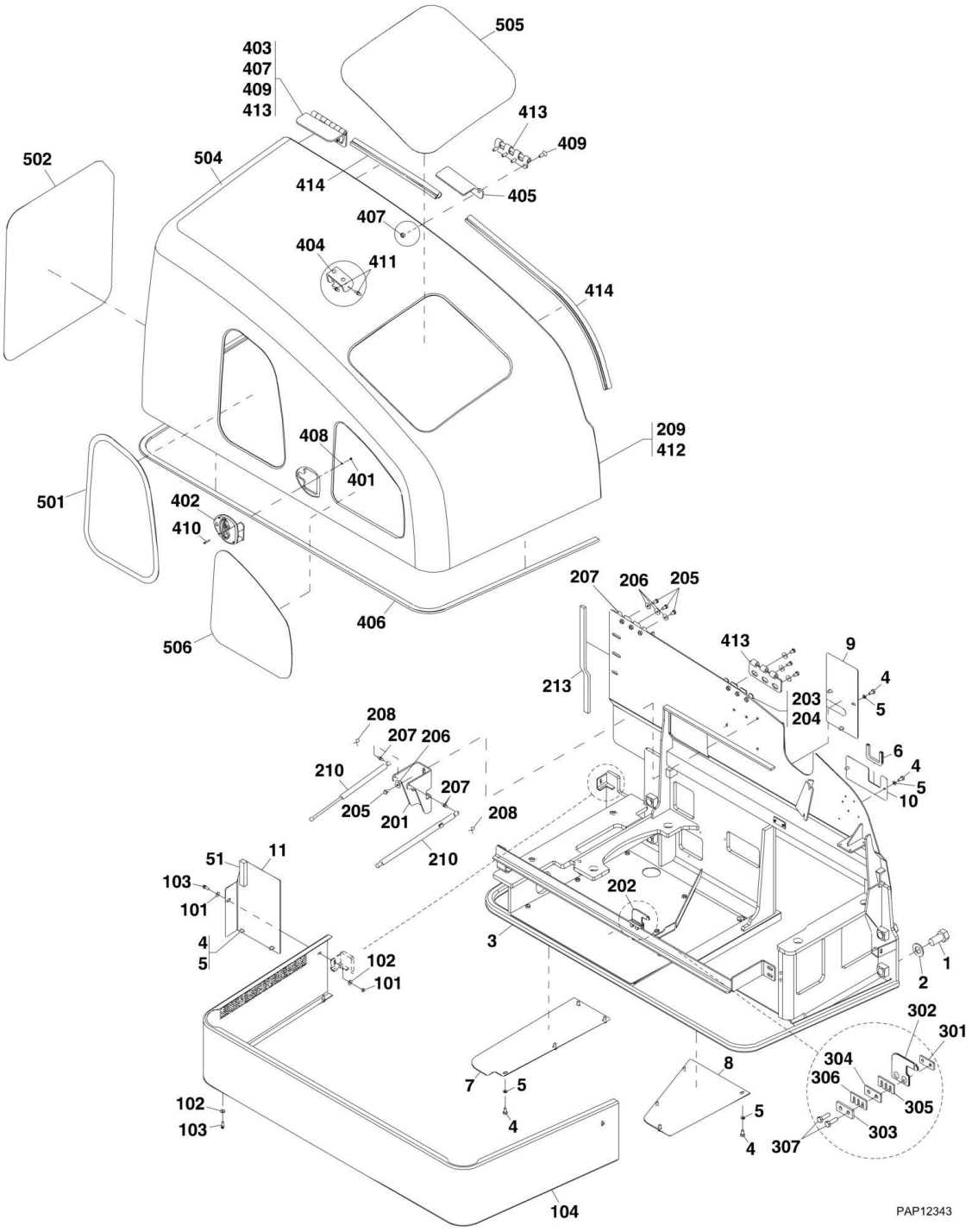

FIGURE 1-5. ENGINE POD INSTALLATION (644E SN 1600408717 to Present, Including 0160045421; 944E SN 160041827 to Present)

ITEM	PART NUMBER	QTY	DESCRIPTION	REV
	1001112264	Ref	ENGINE POD INSTALLATION, (not available to order, see items 1 thru 11 for service)	C
1	0683020	4	HEX HD CAPSCREW, 1-1/4X2-1/2, GR8, (torque to 1213 to 2183 lb-ft/1645-2960 Nm)	
2	8310539	4	WASHER, 1-1/4	
3	1001112271	1	WELDMENT	
4	0761010	15	HEX HD CAPSCREW, M10X20, GR8.8, (torque to 50 Nm/37 lb-ft)	
5	4832000	15	LOCKWASHER, 10mm	
6	90206196	7.5 in	TRIM	
7	1001125456	1	COOLER COVER PLATE	
8	1001125457	1	ENGINE COVER PLATE	
9	1001125458	1	ENGINE POD COVER PLATE	
10	1001125459	1	ENGINE POD COVER PLATE	
11	1001125720	1	ENGINE POD COVER PLATE, (includes item 51)	B
51	1001125721	1	FOAM SEAL	
	1001125402	Ref	ENGINE POD COVER INSTALLATION, (not available to order, see items 101 thru 104 for service)	A
101	8305654	2	HEX NUT, M8X1.25	
102	8307203	12	WASHER, 5/16	
103	8310693	10	HEX FLANGE SCREW, M8X25, GR8.8, (torque to 13-23 lb-ft/18-31 Nm)	
104	1001125401	1	ENGINE POD COVER ASSEMBLY	
	1001112381	Ref	HOOD INSTALLATION, (not available to order, see items 201 thru 213 for service)	C
201	7300687	1	GAS STRUT BRACKET	
202	7301370	1	LATCH ASSEMBLY, (includes items 301 thru 307)	AB
203	7301526	AR	10 GAUGE SHIM	
204	7301527	AR	16 GAUGE SHIM	
205	8303784	8	HEX HD CAPSCREW, M10X20, GR8.8, (torque to 25-44 lb-ft/34-60 Nm)	
206	8310621	8	WASHER, 10mm	
207	8340038	2	BALL STUD, 10mm, (torque to 12-21 lb-ft)	
208	8702164	4	SPRING RETAINER CLIP	
209	1001112382	1	HOOD ASSEMBLY, (includes items 401 thru 414)	D
210	8702162	2	GAS SPRING	
213	1001125463	1	FOAM SEAL	
301	7301312	1	HOOD LATCH PLATE	
302	7301371	1	LATCH CATCH PLATE	
303	7301372	AR	HOOD LATCH PLATE	
304	7301373	AR	LATCH CATCH PLATE, 7 GA SPACER	
305	7301526	AR	20 GAUGE SHIM	
306	7301527	AR	16 GAUGE SHIM	
307	8303777	2	HEX HD CAPSCREW, M10X35, GR8.8, (torque to 34-61 Nm/25-45 Nm)	
401	3290405	4	HEX LOCKNUT, M4X0.7	
402	7300364	1	HOOD LATCH ASSEMBLY	
402	8342813	1	HOOD LATCH KEY	
403	7300634	1	REAR HINGE BRACKET	
404	7300645	1	GAS SPRING BRACKET	
405	7300943	1	FRONT HINGE BRACKET	

SECTION 1 - FRAME AND ATTACHING PARTS

ITEM	PART NUMBER	QTY	DESCRIPTION	REV
406	8277172	1	SEAL	
407	8305038	8	HEX NUT, M10X1.5	
408	8310491	4	WASHER, 4mm	
409	8310614	8	FLANGE SOCKET HEX HD CAPSCREW, M10X30	
410	8310664	4	SOCKET HD CAPSCREW, M4X25, GR12.9, (torque to 2-4 lb-ft/3-5 Nm)	
411	8340038	2	BALL STUD, 10mm	
412	1001112383	1	HOOD ASSEMBLY, (includes items 501 thru 506)	D
413	7300630	2	REAR HINGE	
414	1001131991	56.3 in	BULB SEAL	
501	1001125299	1	SIDE MESH	
502	1001125301	1	REAR MESH	
504	1001112384	1	BASE MOLD HOOD	
505	1001112386	1	TOP MESH	
506	1001112387	1	SIDE MESH	

FIGURE 1-6. FENDER ASSEMBLY

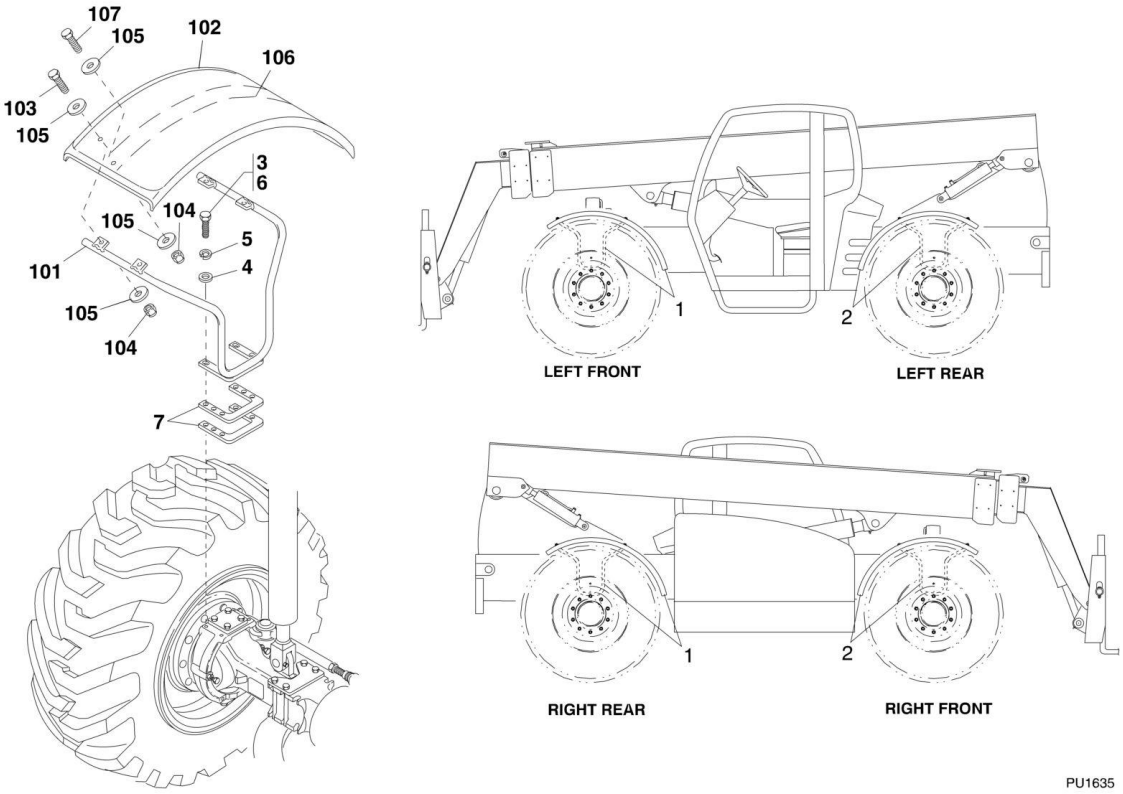

FIGURE 1-6. FENDER ASSEMBLY

ITEM	PART NUMBER	QTY	DESCRIPTION	REV
	7301311	Ref	FENDER INSTALLATION, (644E), (944E, if equipped), (not available to order, see items 1 thru 5 for service)	AB
	1001109604	Ref	FENDER INSTALLATION, (944E, if equipped with Solid Tire 1001105703, 1001105703 & 01151109), (not available to order, see items 1 thru 7 for service) **(SN 160037902 to Present)**	A
1	7150695	2	LEFT FRONT/RIGHT REAR FENDER ASSEMBLY, (includes items 101 thru 107)	G
2	7150696	2	RIGHT FRONT/LEFT REAR FENDER ASSEMBLY, (includes items 101 thru 107)	G
3	8310164	16	HEX HD CAPSCREW, M12X40, GR8.8	
3	0701221	16	HEX HD CAPSCREW, M12X65, GR8.8, (944E, if equipped with Solid Tire 1001105703), (torque to 43-78 lb-ft/58-106 Nm) **(SN 160037902 to Present)**	
4	8310308	16	WASHER, 1/2	
5	8307025	16	LOCKWASHER, 12mm	
5	4832100	16	SPRING LOCKWASHER, 12 mm, (944E, if equipped with Solid Tire 1001105703) **(SN 160037902 to Present)**	
6	8526007	AR	LOCTITE 242, (apply to item 3)	
7	1001109573	8	SHIM, (944E, if equipped with Solid Tire 1001105703) **(SN 160037902 to Present)**	
101	7150668	1	FENDER MOUNT **(SN 17569 through 20123, SN 0160002514 through 0160025339)**	
101	0903609	1	FENDER MOUNT **(SN 0160025381 to Present)**	
102	7150706	1	FENDER	
103	8303626	4	HEX HD CAPSCREW, 1/2-13X1-1/2, GR5	
104	8305644	6	HEX LOCKNUT, 1/2-13 **(SN 17569 through 20123, SN 0160002514 through 0160025339)**	
104	8305644	4	HEX LOCKNUT, 1/2-13 **(SN 0160025381 to Present)**	
105	8307206	12	PLAIN WIDE WASHER, 1/2 **(SN 17569 through 20123, SN 0160002514 through 0160025339)**	
105	8307206	8	PLAIN WIDE WASHER, 1/2 **(SN 0160025381 to Present)**	
106	6623576	1	FENDER SUPPORT **(SN 17569 through 20123, SN 0160002514 through 0160025339)**	
107	8303625	2	HEX HD CAPSCREW, 1-1/2-13X1-1/2, GR5 **(SN 17569 through 20123, SN 0160002514 through 0160025339)**	

SECTION 2 - BOOM

FIGURE 2-1. FIRST BOOM SECTION 644E

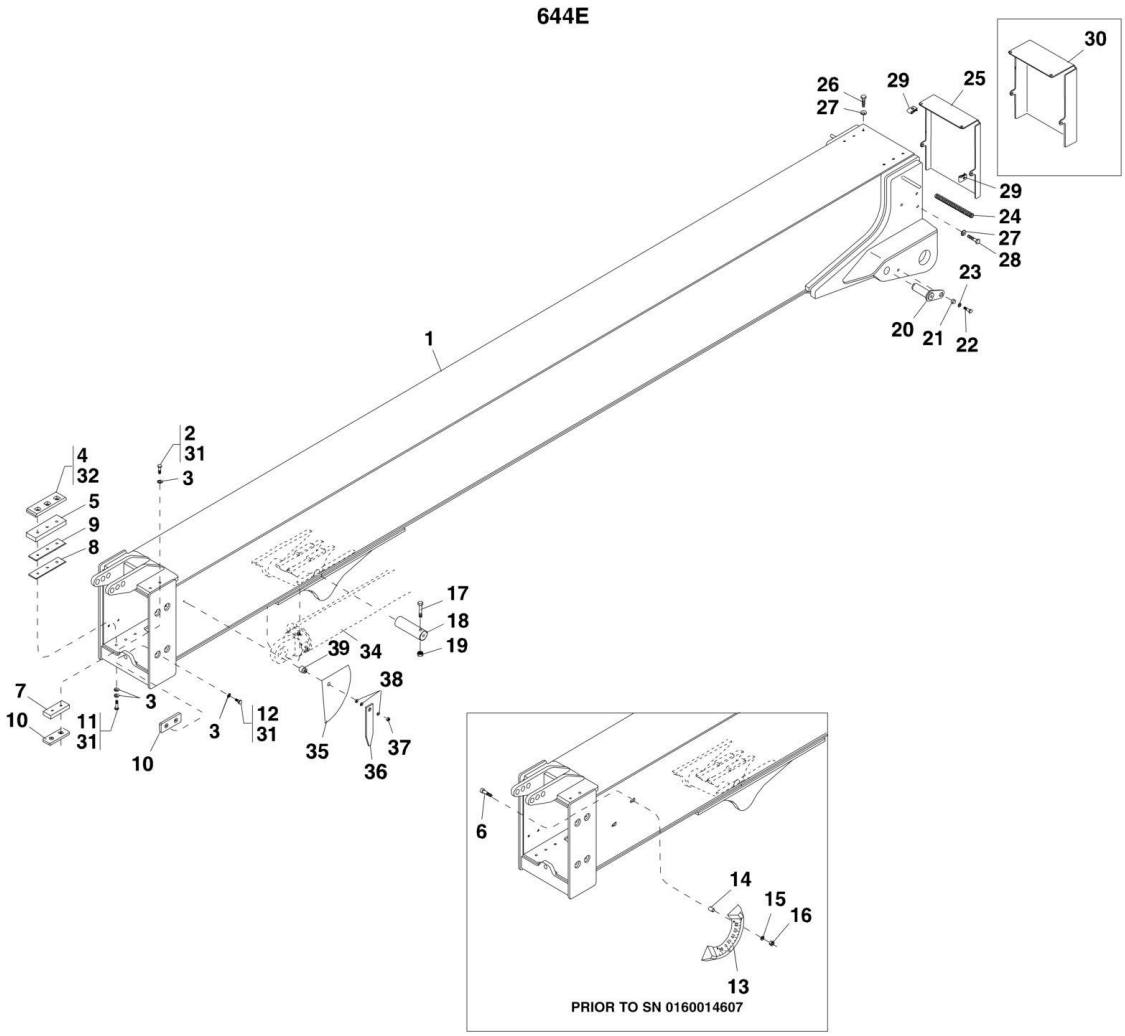

FIGURE 2-1. FIRST BOOM SECTION 644E

ITEM	PART NUMBER	QTY	DESCRIPTION	REV
1	7300950	1	FIRST BOOM SECTION	
2	8310125	4	HEX HD CAPSCREW, 10-1.5X55mm, PC8.8	
3	8307221	24	PLAIN WASHER, 10mm	
4	7300034	2	WEAR PAD, (includes inserts)	
5	7300064	2	WEAR PAD SPACER	
6	8310630	2	CARRIAGE BOLT, 6-1.0X40mm, PC8.8 **(SN 17569 through 20123, SN 0160002514 through 160014607)**	
7	7300516	2	WEAR PAD SPACER	
8	7126172	2	SHIM, WEAR PAD, 3.42mm, (10 GA)	
9	7126182	2	SHIM, WEAR PAD, 1.90mm, (14 GA)	
10	7300032	6	WEAR PAD, (includes inserts)	
11	8310748	6	HEX HD CAPSCREW, 10-1.5X50mm, PC8.8	
12	8303551	8	HEX HD CAPSCREW, 10-1.5X16mm, PC8.8	
13	10238252	1	BOOM ANGLE INDICATOR **(SN 17569 through 20123, SN 0160002514 through 160014607)**	
14	8310629	2	SPACER **(SN 17569 through 20123, SN 0160002514 through 160014607)**	
15	8307219	2	PLAIN WASHER, 6mm **(SN 17569 through 20123, SN 0160002514 through 160014607)**	
16	8305652	2	HEX LOCKNUT, 6-1.0mm **(SN 17569 through 20123, SN 0160002514 through 160014607)**	
17	8310627	1	HEX HD CAPSCREW, 20-2.5X140mm, PC8.8	
18	7139325	1	LIFT/LOWER CYLINDER PIN	
19	8305655	1	HEX LOCKNUT, 20-2.5mm	
20	7300723	2	TILT COMPENSATION CYLINDER PIN, (rod end)	
21	7139886	2	PIN RETENTION SPACER	
22	8310164	2	HEX HD CAPSCREW, 12-1.75X40mm, PC8.8	
23	8310657	2	PLAIN WASHER, 12mm	
24	6620731	1	MOULDING	
25	7301175	1	REAR BOOM COVER **(SN 17569 through 20118, SN 0160002519 through 0160005949, Excluding 0160004236, 0160004237 and 0160005773)**	
26	8303611	2	HEX HD CAPSCREW, 8-1.25X30mm, PC8.8	
27	8307222	4	FLAT WASHER, 8mm	
28	8310030	2	HEX HD CAPSCREW, 8-1.25X80mm, PC8.8	
29	8310686	4	RETAINER NUT, 8-1.25mm	
30	7302064	1	REAR BOOM COVER, **(SN 0160006093 to Present, Including 0160004236, 0160004237 and 0160005773)**	
31	8526007	AR	LOCTITE 242, (apply to items 2, 11 & 12)	
32	8522050	AR	LUBRIPLATE GREASE, #5555, (apply to item 4)	
33	8522051	AR	RUST INHIBITOR, HEAVY DUTY, (not shown)	
34		Ref	BOOM EXTEND/RETRACT CYLINDER, (See HYDRAULIC COMPONENTS SECTION for Breakdown)	
35	4105262	1	BOOM ANGLE INDICATOR DECAL **(SN 0160014607 to Present)**	
36	7075611	1	BOOM ANGLE INDICATOR POINTER **(SN 0160014607 through 0160033138)**	
36	1001098769	1	BOOM ANGLE INDICATOR POINTER **(SN 0160033139 to Present)**	
37	8305647	1	HEX LOCK NUT, 7/16-14 **(SN 0160014607 through 0160033138)**	
37	8305645	1	HEX LOCK NUT, 3/8-16 **(SN 0160033139 to Present)**	
38	8307113	3	PLAIN WASHER, 7/16 **(SN 0160014607 through 0160033138)**	
38	4711600	1	WASHER, 3/8 **(SN 0160033139 to Present)**	

SECTION 2 - BOOM

ITEM	PART NUMBER	QTY	DESCRIPTION	REV
39	1001096404	1	ANGLE INDICATOR SPACER **(SN 0160033139 to Present)**	

FIGURE 2-2. FIRST BOOM SECTION 944E

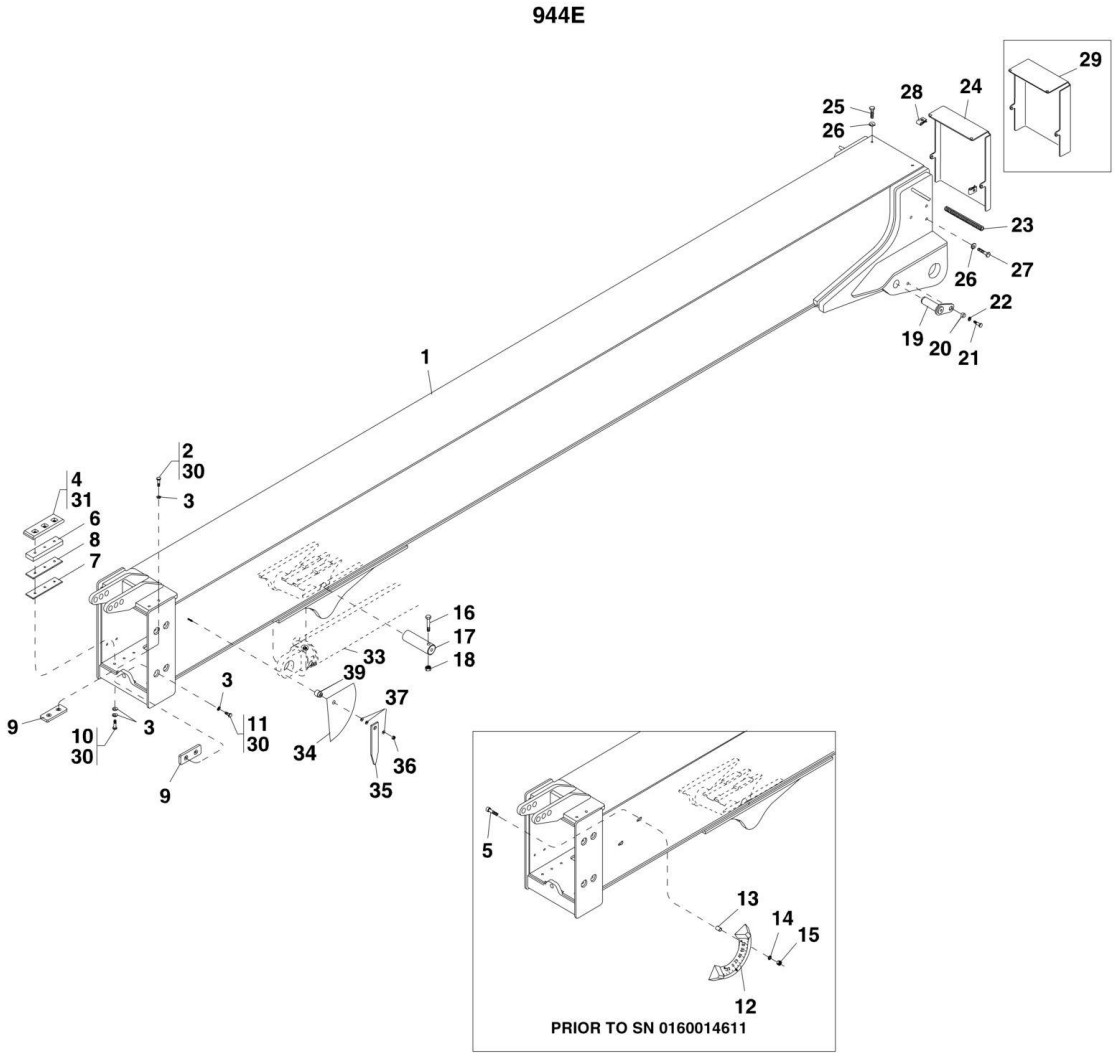

FIGURE 2-2. FIRST BOOM SECTION 944E

ITEM	PART NUMBER	QTY	DESCRIPTION	REV
1	7300966	1	FIRST BOOM SECTION	
2	8303097	4	HEX HD CAPSCREW, 10-1.5X65mm, PC8.8	
3	8307221	24	PLAIN WASHER, 10mm	
4	7300034	2	WEAR PAD, (includes inserts)	
5	8310630	2	CARRIAGE BOLT, 6-1.0X40mm, PC8.8 **(SN 17569 through 20123, SN 0160002514 through 160014607)**	
6	7300064	2	WEAR PAD	
7	7126172	2	SHIM, WEAR PAD, 3.42mm, (10 GA)	
8	7126182	2	SHIM, WEAR PAD, 1.90mm, (14 GA)	
9	7300032	6	WEAR PAD, (includes inserts)	
10	8310748	6	HEX HD CAPSCREW, 10-1.5X50mm, PC8.8	
11	8303551	8	HEX HD CAPSCREW, 10-1.5X16mm, PC8.8	
12	10238252	1	BOOM ANGLE INDICATOR **(SN 17569 through 20123, SN 0160002514 through 160014607)**	
13	8310629	2	SPACER **(SN 17569 through 20123, SN 0160002514 through 160014607)**	
14	8307219	2	PLAIN WASHER, 6mm **(SN 17569 through 20123, SN 0160002514 through 160014607)**	
15	8305652	2	HEX LOCKNUT, 6-1.0mm **(SN 17569 through 20123, SN 0160002514 through 160014607)**	
16	8310627	1	HEX HD CAPSCREW, 20-2.5X140mm, PC8.8	
17	7139325	1	LIFT/LOWER CYLINDER PIN	
18	8305655	1	HEX LOCKNUT, 20-2.5mm	
19	7300723	2	TILT COMPENSATION CYLINDER PIN, (rod end)	
20	7139886	2	PIN RETENTION SPACER	
21	8310164	2	HEX HD CAPSCREW, 12-1.75X40mm, PC8.8	
22	8310657	2	PLAIN WASHER, 12mm	
23	6620731	1	MOULDING	
24	7301183	1	REAR BOOM COVER **(SN 18554 through 20123, SN 0160002514 through 0160006008, Including 0160006152, Excluding 0160006007)**	
25	8303611	2	HEX HD CAPSCREW, 8-1.25X30mm, PC8.8	
26	8307222	4	FLAT WASHER, 8mm	
27	8310293	2	HEX HD CAPSCREW, 8-1.25X50mm, PC8.8	
28	8310686	4	RETAINER NUT, 8-125mm	
29	7302065	1	REAR BOOM COVER, **(SN 0160006007 to Present, Excluding 0160006008 and 0160006152)**	
30	8526007	AR	LOCTITE 242, (apply to items 2, 10 & 11)	
31	8522050	AR	LUBRIPLATE GREASE, #5555, (apply to item 4)	
32	8522051	AR	RUST INHIBITOR, HEAVY DUTY, (not shown)	
33		Ref	BOOM EXTEND/RETRACT CYLINDER, (See HYDRAULIC COMPONENTS SECTION for Breakdown)	
34	4105262	1	BOOM ANGLE INDICATOR DECAL **(SN 0160014607 to Present)**	
35	7075611	1	BOOM ANGLE INDICATOR POINTER **(SN 0160014607 through 0160033138)**	
35	1001098769	1	BOOM ANGLE INDICATOR POINTER **(SN 0160033139 to Present)**	
36	8305647	1	HEX LOCK NUT, 7/16-14 **(SN 0160014607 through 0160033138)**	
36	8305645	1	HEX LOCK NUT, 3/8-16 **(SN 0160033139 to Present)**	
37	8307113	3	PLAIN WASHER, 7/16 **(SN 0160014607 through 0160033138)**	
37	4711600	1	WASHER, 3/8 **(SN 0160033139 to Present)**	
39	1001096404	1	ANGLE INDICATOR SPACER **(SN 0160033139 to Present)**	

FIGURE 2-3. SECOND BOOM SECTION 644E

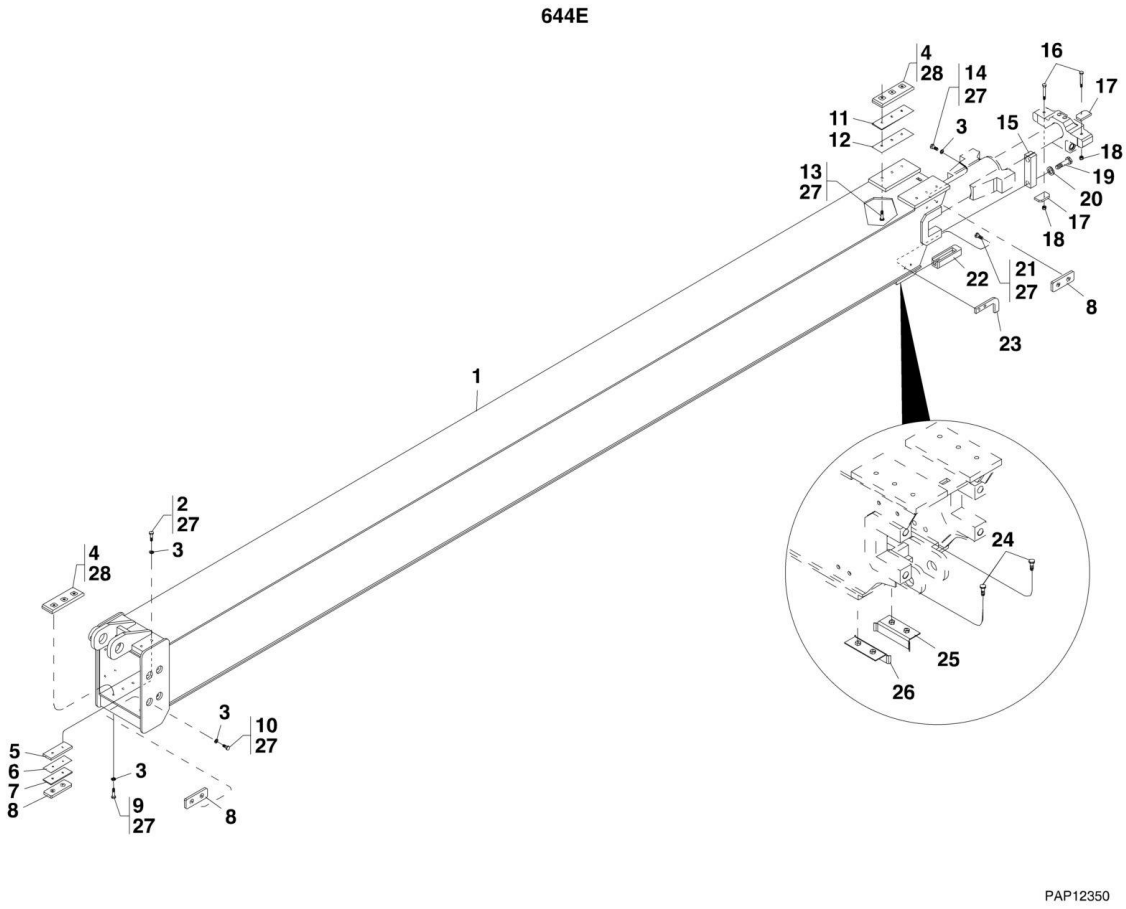

FIGURE 2-3. SECOND BOOM SECTION 644E

ITEM	PART NUMBER	QTY	DESCRIPTION	REV
1	7300098	1	SECOND BOOM SECTION	
2	8303097	4	HEX HD CAPSCREW, 10-1.5X65mm, PC8.8	
3	8307221	22	PLAIN WASHER, 10mm	
4	7300034	4	WEAR PAD, (includes inserts)	
5	7300516	2	SPACER	
6	7300517	AR	SHIM, 3.42mm, (10 GA)	
7	7300518	AR	SHIM, 1.90mm, (14 GA)	
8	7300032	8	WEAR PAD, (includes inserts)	
9	8303784	6	HEX HD CAPSCREW, 10-1.5X20mm, PC8.8	
10	8303551	8	HEX HD CAPSCREW, 10-1.5X16mm, PC8.8, (torque to 46-52 Nm)	
11	7126172	AR	SHIM, 3.42mm, (10 GA)	
12	7126182	AR	SHIM, 1.90mm, (14 GA)	
13	8310600	6	HEX HD CAPSCREW, 10-1.5X20mm, PC12.9	
14	8303755	4	HEX HD CAPSCREW, 10-1.5X30mm, PC8.8, (torque to 29-52 Nm)	
15	4220238	2	EXTEND CYLINDER ANCHOR PLATE	
16	8310705	2	HEX HD CAPSCREW, 10-1.5X75mm, PC8.8, (torque to 46-52 Nm)	
17	7300522	2	EXTEND CYLINDER ROD MOUNT PLATE	
18	8305630	2	HEX LOCKNUT, 10-1.5mm	
19	8310598	4	HEX HD CAPSCREW, 20-2.5X80mm, PC10.9	
20	8310620	4	PLAIN WASHER, 20mm	
21	8303798	4	HEX HD CAPSCREW, 10-1.5X25mm, PC8.8	
22	7120182	2	WEAR PAD CHANNEL	
23	7300579	2	WEAR PAD STOP PLATE	
24	8303783	4	HEX HD CAPSCREW, 8-1.25X25mm, PC8.8, (torque to 14-26 Nm)	
25	7301533	1	RH HOSE GUIDE	
26	7301535	1	LH HOSE GUIDE	
27	8526007	AR	LOCTITE 242, (apply to items 2, 9, 10, 13, 14 & 21)	
28	8522050	AR	LUBRIPLATE GREASE, #5555, (apply to item 4)	
29	8522051	AR	RUST INHIBITOR, HEAVY DUTY, (not shown)	

FIGURE 2-4. SECOND BOOM SECTION 944E

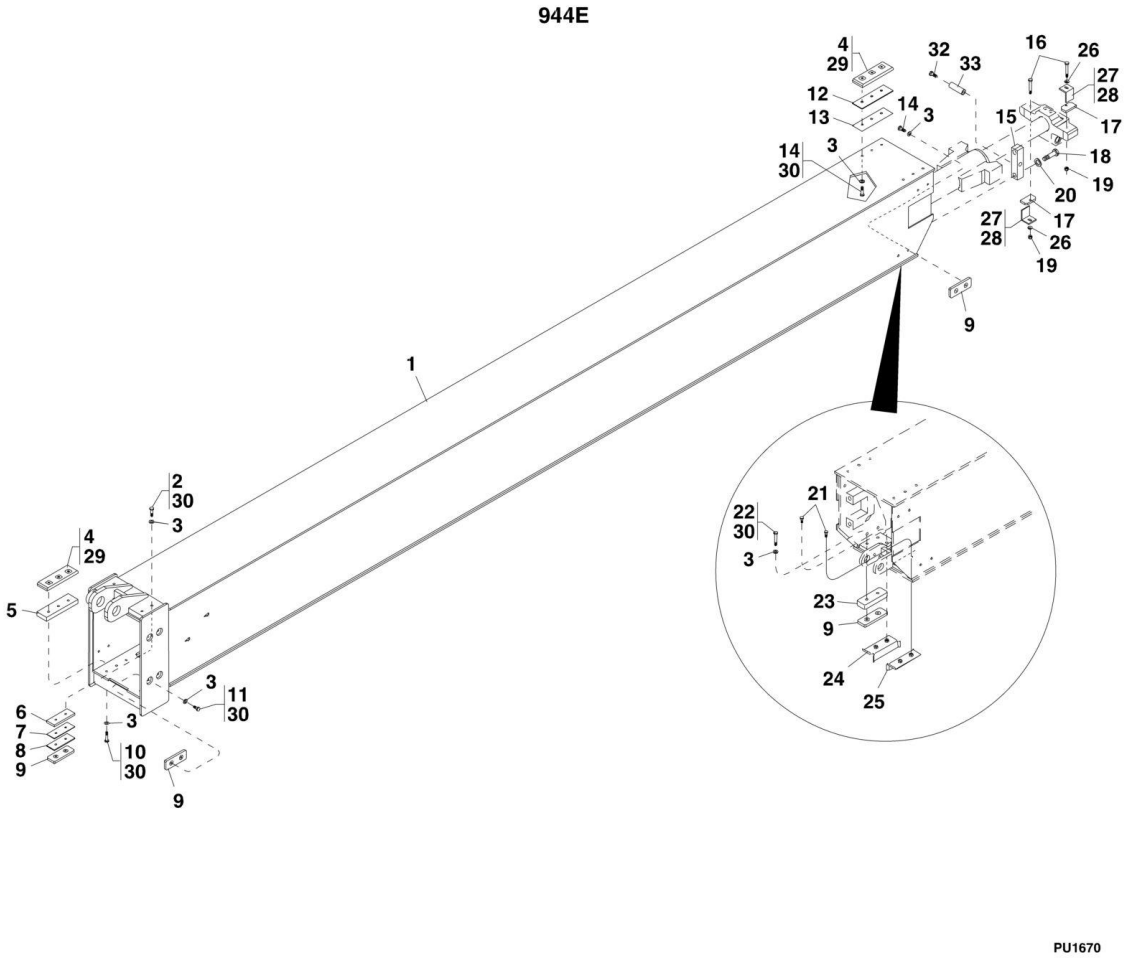

FIGURE 2-4. SECOND BOOM SECTION 944E

ITEM	PART NUMBER	QTY	DESCRIPTION	REV
1	7300805	1	SECOND BOOM SECTION	
2	8303097	4	HEX HD CAPSCREW, 10-1.5X65mm, PC8.8	
3	8307221	36	PLAIN WASHER, 10mm	
4	7300034	4	WEAR PAD, (includes inserts)	
5	7300064	2	SPACER	
6	7300516	2	SPACER	
7	7300517	AR	SHIM, 3.42mm, (10 GA)	
8	7300518	AR	SHIM, 1.90mm, (14 GA)	
9	7300032	12	WEAR PAD, (includes inserts)	
10	8303769	6	HEX HD CAPSCREW, 10-1.5X45mm, PC8.8	
11	8303551	8	HEX HD CAPSCREW, 10-1.5X16mm, PC8.8	
12	7126172	AR	SHIM, 3.42mm, (10 GA)	
13	7126182	AR	SHIM, 1.90mm, (14 GA)	
14	8303798	14	HEX HD CAPSCREW, 10-1.5X25mm, PC8.8	
15	4220238	2	EXTEND CYLINDER ANCHOR PLATE	
16	8310354	2	HEX HD CAPSCREW, 10-1.5X80mm, PC8.8	
17	7300522	2	EXTEND CYLINDER ROD MOUNT	
18	8310598	4	HEX HD CAPSCREW, 20-2.5X80mm, PC10.9	
19	8305630	2	HEX LOCKNUT, 10X1.5mm	
20	8310620	4	PLAIN WASHER, 20mm	
21	8303783	4	HEX HD CAPSCREW, 8-1.25X25mm, PC8.8	
22	8303753	4	HEX HD CAPSCREW, 10-1.5X60mm, PC8.8	
23	7300973	2	SPACER	
24	7301535	1	LH HOSE GUIDE	
25	7301533	1	RH HOSE GUIDE	
26	8307220	2	PLAIN WASHER, 12mm	
27	7301756	AR	EXTEND CYLINDER, THICK SHIM	
28	7301757	AR	EXTEND CYLINDER, THIN SHIM	
29	8522050	AR	LUBRIPLATE GREASE #5555, (apply to item 4)	
30	8526007	AR	LOCTITE 242, (apply to items 2, 10, 11, 14, & 22)	
31	8522007	AR	RUST INHIBITOR, HEAVY DUTY, (not shown)	
32	8310514	2	SOCKET HD SHOULDER SCREW, 1/2X1-3/4X3/8-16	
33	3860123	2	BOOM HOSE ROLLER	

FIGURE 2-5. THIRD BOOM SECTION 644E

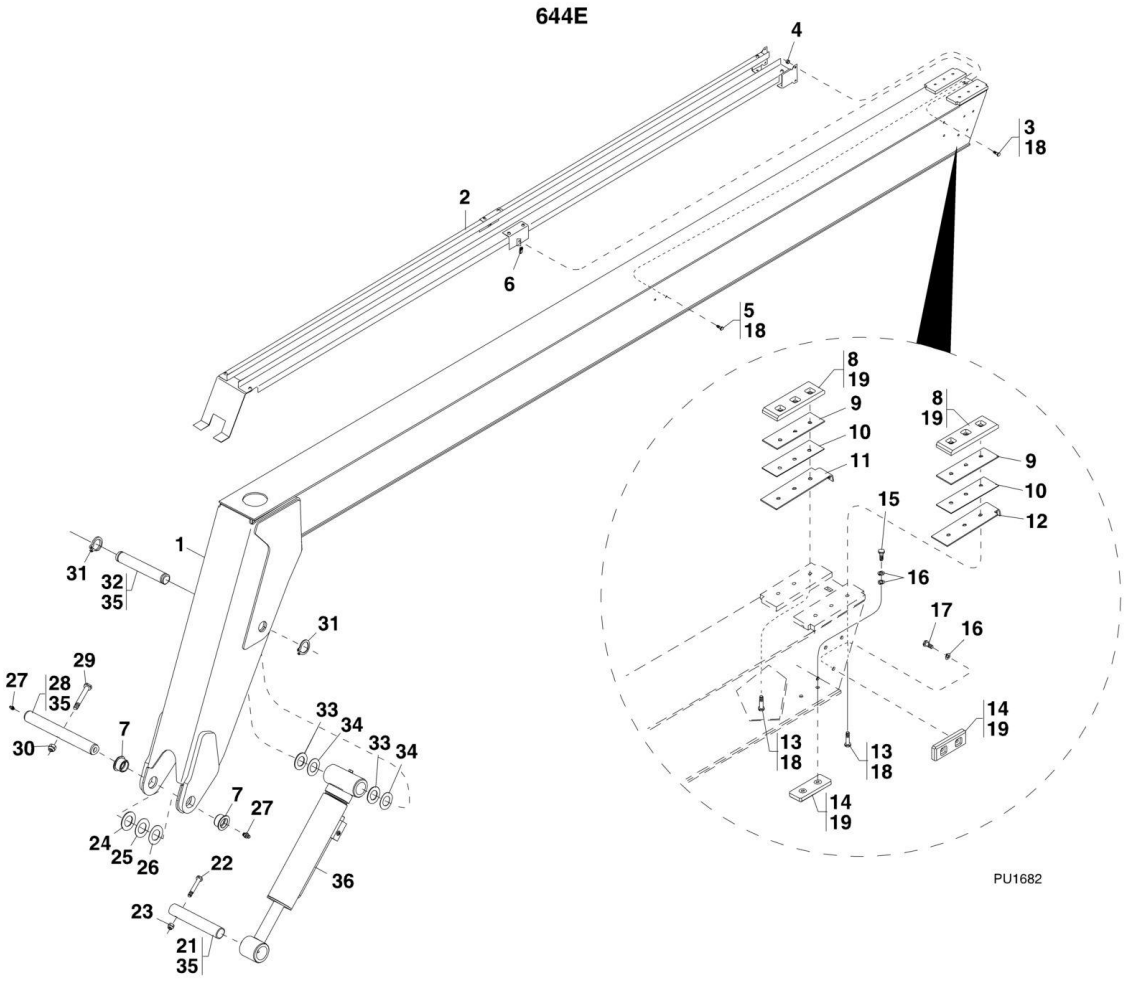

FIGURE 2-5. THIRD BOOM SECTION 644E

ITEM	PART NUMBER	QTY	DESCRIPTION	REV
1	7300099	1	THIRD BOOM SECTION	
2	7301253	1	BOOM HOSE GUIDE	
3	8303784	4	HEX HD CAPSCREW, 10-1.5X20mm, PC8.8	
4	8305630	4	HEX LOCKNUT, 10-1.5mm	
5	8303606	2	HEX HD CAPSCREW, 8-1.25X20mm, PC8.8	
6	8310686	2	RETAINER NUT, 8-1.25X25.4mm	
7	7300620	2	QUICK ATTACH PIVOT FLANGE BUSHING	
8	7300034	2	WEAR PAD, (includes inserts)	
9	7126172	AR	SHIM, 3.42mm, (10 GA)	
10	7126182	AR	SHIM, 1.90mm, (14 GA)	
11	7300512	1	LEFT CLAMP MOUNT BRACKET ASSY	
12	7300511	1	RIGHT CLAMP MOUNT BRACKET ASSY	
13	8310600	6	HEX HD CAPSCREW, 10-1.5X20mm, PC12.9	
14	7300032	6	WEAR PAD, (includes inserts)	
15	8303777	4	HEX HD CAPSCREW, 10-1.5X35mm, PC8.8	
16	8307221	AR	PLAIN WASHER, 10mm	
17	8303551	8	HEX HD CAPSCREW, 10-1.5X16mm, PC8.8	
18	8526007	AR	LOCTITE 242, (apply to items 3, 5 & 13)	
19	8522050	AR	LUBRIPLATE GREASE, (apply to items 8 & 14)	
20	8522051	AR	RUST INHIBITOR, HEAVY DUTY, (not shown)	
21	7300112	1	FORK TILT QUICK ATTACH PIN	
22	8303265	1	HEX HD CAPSCREW, 12-1.75X130mm, PC8.8	
23	8310625	1	HEX LOCKNUT, 12-1.75mm	
24	8307904	AR	SHIM WASHER, 2X.048X3	
25	8310093	AR	SHIM WASHER, 2X.075X3.5	
26	8307918	AR	SHIM WASHER, 2X.134X3.5	
27	8520001	2	LUBE FITTING, 1/8	
28	7083922	1	CARRIAGE PIVOT PIN	
29	8310606	1	HEX HD CAPSCREW, 16-2.0X130mm, PC8.8	
30	8310217	1	HEX LOCKNUT, 16-2.0mm	
31	8630022	2	SHAFT RETAINING RING	
32	7300111	1	ATTACHMENT TILT CYLINDER BOOM PIN, (644E)	
32	7300829	1	ATTACHMENT TILT CYLINDER BOOM PIN, (944E)	
33	8310706	AR	SHIM WASHER, 2.25X.048X3.75	
34	8310707	AR	SHIM WASHER, 2.25X.075X3.75	
35	8522012	AR	ANTI-SIEZE LUBE, (apply to items 21, 28 & 32)	
36		Ref	ATTACHMENT TILT CYLINDER, (See HYDRAULIC COMPONENTS SECTION for Breakdown)	

FIGURE 2-6. THIRD BOOM SECTION 944E

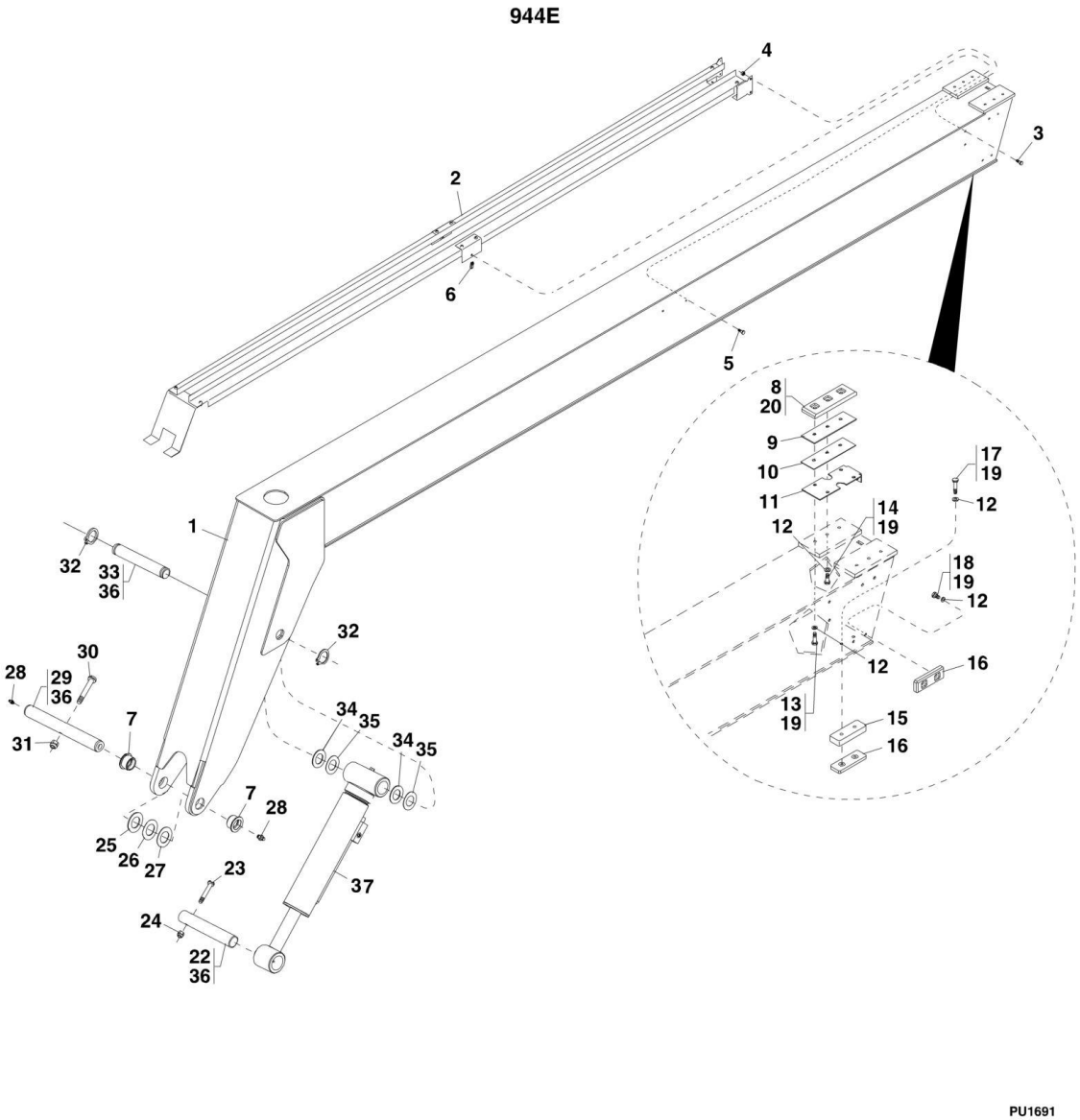

FIGURE 2-6. THIRD BOOM SECTION 944E

ITEM	PART NUMBER	QTY	DESCRIPTION	REV
1	7300816	1	THIRD BOOM SECTION	
2	7301257	1	BOOM HOSE GUIDE	
3	8303784	4	HEX HD CAPSCREW, 10-1.5X20mm, PC8.8	
4	8305630	4	HEX LOCKNUT, 10-1.5mm	
5	8303606	2	HEX HD CAPSCREW, 8-1.25X20mm, PC8.8	
6	8310686	2	RETAINER NUT, 8-1.25X25.4mm	
7	7300620	2	QUICK ATTACH PIVOT FLANGE BUSHING	
8	7300034	2	WEAR PAD, (includes inserts)	
9	7126172	AR	SHIM, 3.42mm, (10 GA)	
10	7126182	AR	SHIM, 1.90mm, (14 GA)	
11	7300899	2	CLAMP MOUNT BRACKET ASSY	
12	8307221	18	PLAIN WASHER, 10mm	
13	8303778	4	HEX HD CAPSCREW, 10-1.5X40mm, PC8.8	
14	8303777	2	HEX HD CAPSCREW, 10-1.5X35mm, PC8.8	
15	7300973	2	SPACER	
16	7300032	6	WEAR PAD, (includes inserts)	
17	8310125	4	HEX HD CAPSCREW, 10-1.5X55mm, PC8.8	
18	8303551	8	HEX HD CAPSCREW, 10-1.5X16mm, PC8.8	
19	8526007	AR	LOCTITE 242, (apply to items 13, 14 & 17)	
20	8522050	AR	LUBRIPLATE GREASE, (apply to item 8)	
21	8522051	AR	RUST INHIBITOR, HEAVY DUTY, (not shown)	
22	7300112	1	FORK TILT QUICK ATTACH PIN	
23	8303265	1	HEX HD CAPSCREW, 12-1.75X130mm, PC8.8	
24	8310625	1	HEX LOCKNUT, 12-1.75mm	
25	8307904	AR	SHIM WASHER, 2X.048X3	
26	8310093	AR	SHIM WASHER, 2X.075X3.5	
27	8307918	AR	SHIM WASHER, 2X.134X3.5	
28	8520001	2	LUBE FITTING, 1/8	
29	7083922	1	CARRIAGE PIVOT PIN	
30	8310606	1	HEX HD CAPSCREW, 16-2.0X130mm, PC8.8	
31	8310217	1	HEX LOCKNUT, 16-2.0mm	
32	8630022	2	SHAFT RETAINING RING	
33	7300111	1	ATTACHMENT TILT CYLINDER BOOM PIN, (644E)	
33	7300829	1	ATTACHMENT TILT CYLINDER BOOM PIN, (944E)	
34	8310706	AR	SHIM WASHER, 2.25X.048X3.75	
35	8310707	AR	SHIM WASHER, 2.25X.075X3.75	
36	8522012	AR	ANTI-SIEZE LUBE, (apply to items 22, 29 & 33)	
37		Ref	ATTACHMENT TILT CYLINDER, (See HYDRAULIC COMPONENTS SECTION for Breakdown)	

FIGURE 2-7. QUICK ATTACH

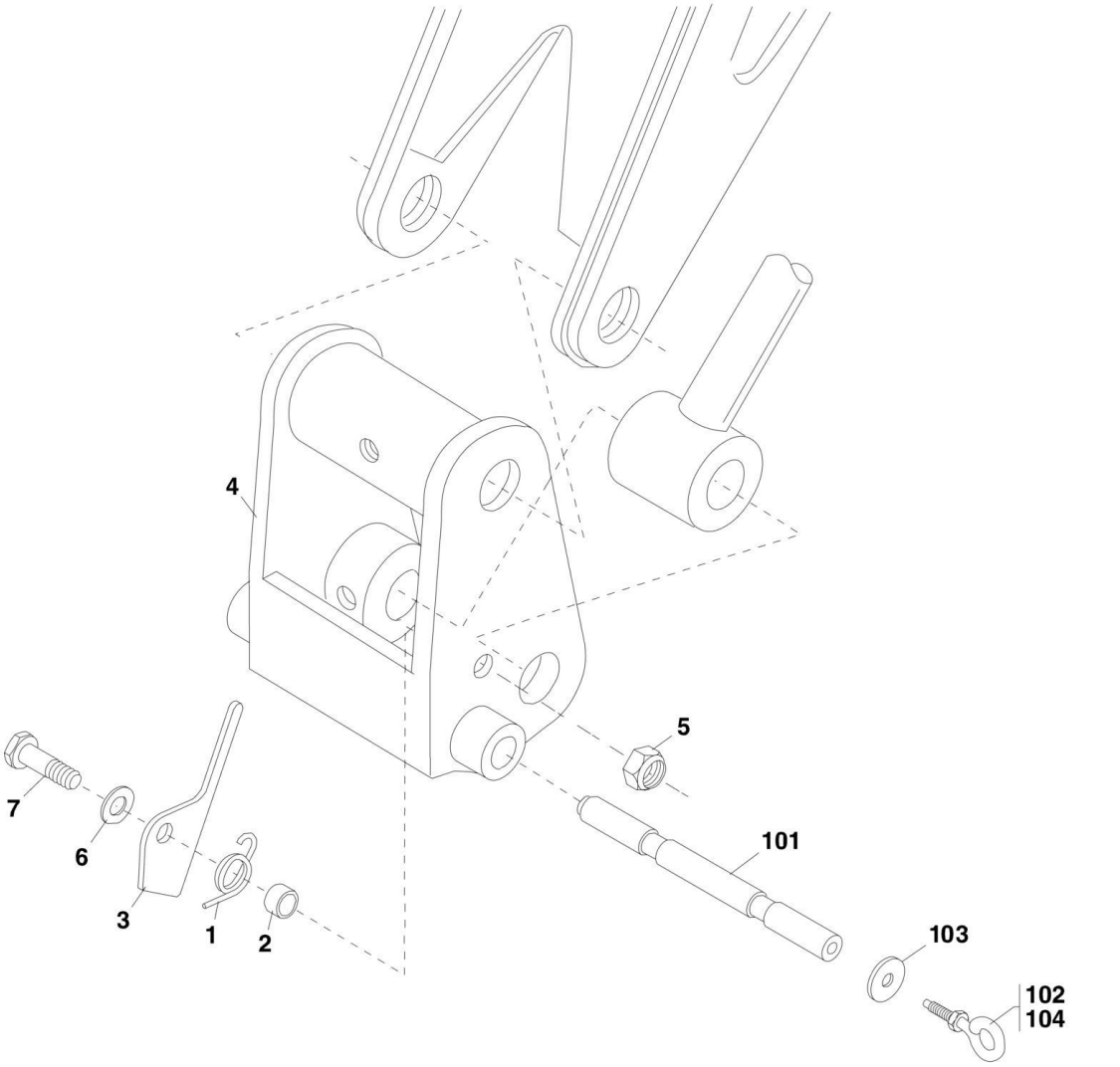

FIGURE 2-7. QUICK ATTACH

ITEM	PART NUMBER	QTY	DESCRIPTION	REV
	7300094	1	QUICK ATTACH ASSY, (includes items 1 thru 7)	AB
1	7085552	1	TORSION SPRING	
2	7085571	1	QUICK ATTACH SPACER	
3	7121422	1	QUICK ATTACH LATCH	
4	7300095	1	QUICK ATTACH	
5	8305655	1	HEX LOCKNUT, 20-2.5mm	
6	8310426	1	PLAIN WASHER, 20mm	
7	8310700	1	HEX HD CAPSCREW, 20-2.5X70mm, PC8.8	
	7118892	1	LOCK PIN, (includes items 101 thru 104)	B
101	7118882	1	PIN	
102	8310266	1	EYE WITH NUT BOLT	
103	8310276	1	WASHER	
104	8526007	AR	LOCTITE 242, (apply to item 102)	

FIGURE 2-8. BOOM EXTEND CHAIN

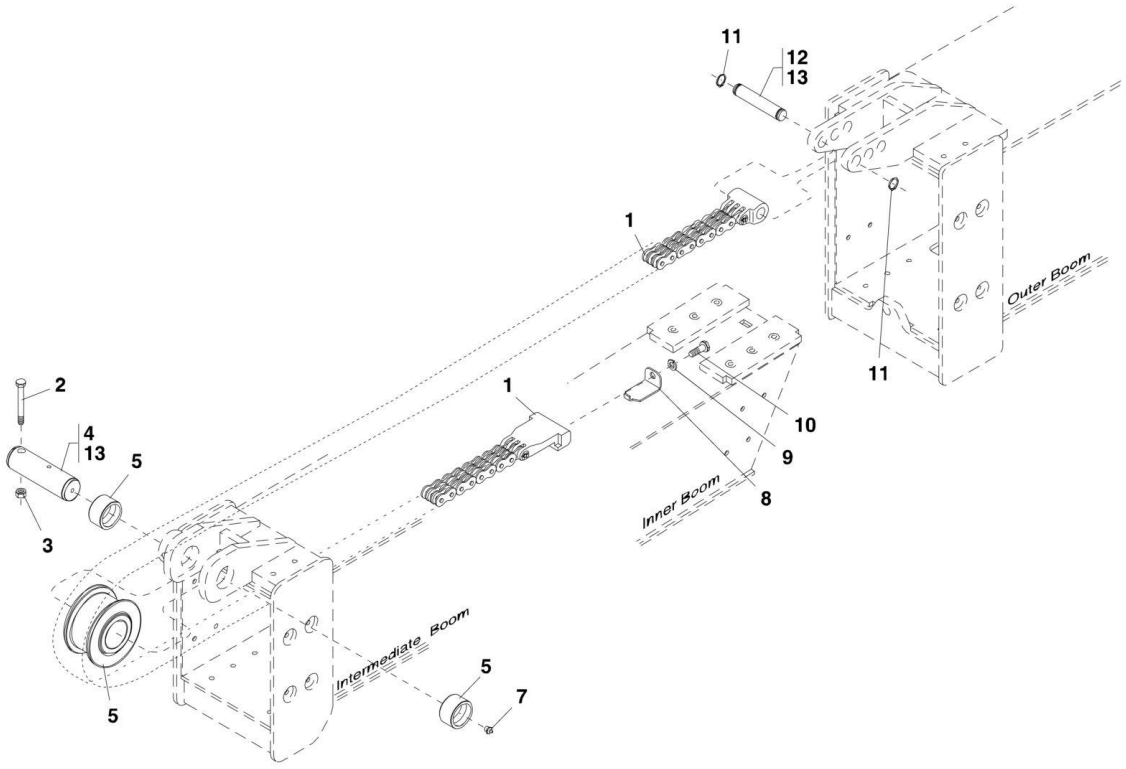

FIGURE 2-8. BOOM EXTEND CHAIN

ITEM	PART NUMBER	QTY	DESCRIPTION	REV
	7300076	Ref	EXTEND CHAIN ASSY, (includes all items)	D
1	7300911	1	EXTEND CHAIN AND CLEVIS ASSY	
2	8310651	1	HEX HD CAPSCREW, 16-2.0X100mm, PC8.8	
3	8310217	1	HEX LOCKNUT, 16-2.0mm	
4	7117582	1	EXTEND CHAIN SHEAVE PIN	
5	1001101867	1	BUSHING SHEAVE ASSY	A
5	7117502	2	CHAIN SHEAVE BUSHING	
5	7114032	1	EXTEND CHAIN SHEAVE	
7	8520001	1	GREASE FITTING, 1/8	
8	7300078	1	CLEVIS RETAINER BRACKET	
9	8307025	1	LOCKWASHER, 12mm	
10	8303790	1	HEX HD CAPSCREW, 12-1.75X30mm, PC8.8	
11	8642236	2	RETAINING RING	
12	7300613	1	CLEVIS PIN	
13	8522012	AR	ANTI-SEIZE LUBE, (apply to items 4 & 12)	

FIGURE 2-9. BOOM RETRACT CHAIN

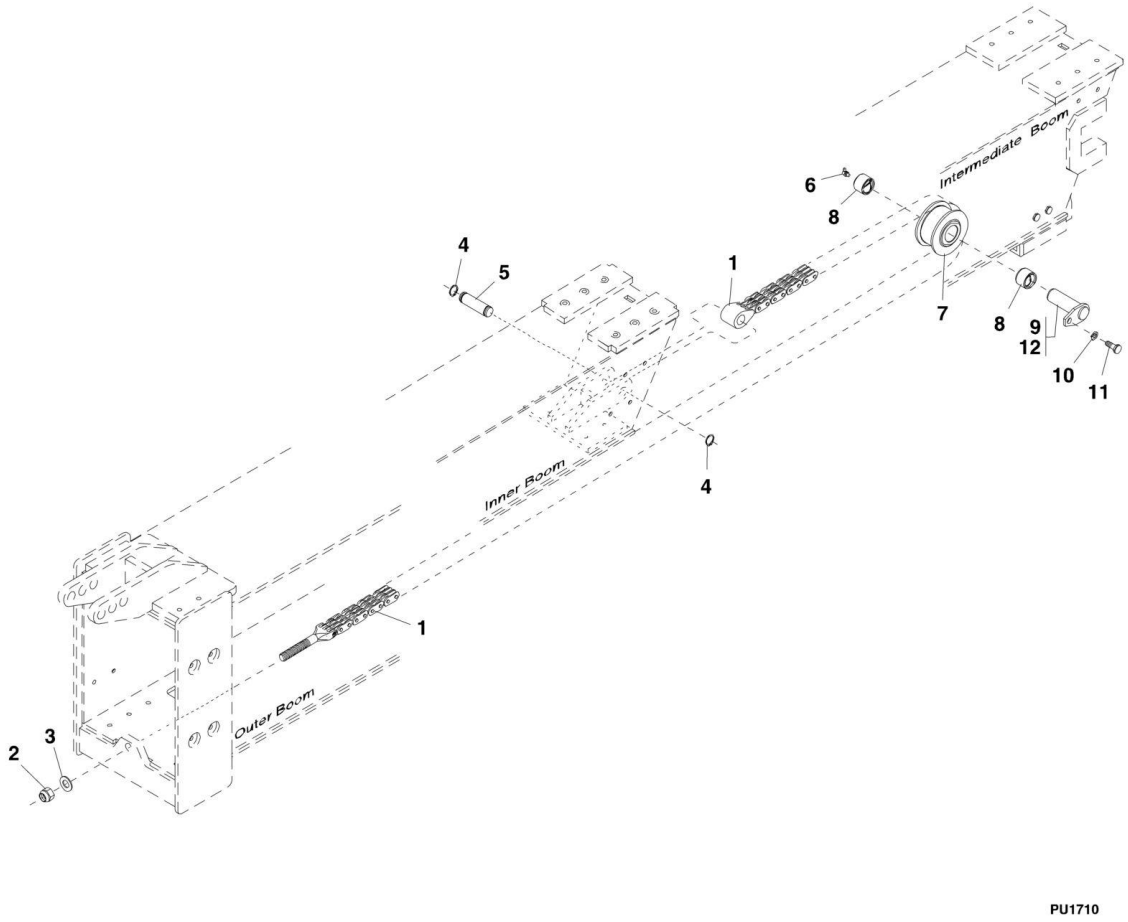

FIGURE 2-9. BOOM RETRACT CHAIN

ITEM	PART NUMBER	QTY	DESCRIPTION	REV
1	7300912	1	RETRACT CHAIN AND CLEVIS ASSY, (644E)	
1	7300970	1	RETRACT CHAIN AND CLEVIS ASSY, (944E)	
2	8305646	1	HEX LOCKNUT, 3/4-16	
3	8307703	1	PLAIN WASHER, 3/4	
4	8642236	2	RETAINING RING	
5	7300106	1	CLEVIS PIN, 90	
6	8520003	1	GREASE FITTING	
7	7138986	1	RETRACT CHAIN SHEAVE ASSY, (includes item 8)	
8	7138979	2	CHAIN SHEAVE BUSHING	
9	7300080	1	RETRACT CHAIN SHEAVE PIN	
10	8307025	1	LOCKWASHER, M12	
11	8303618	1	HEX HD CAPSCREW, M12-1.75X25mm, PC8.8	
12	8522012	AR	ANTI-SIEZE LUBE, (apply to item 9)	

FIGURE 2-10. TRANSFER CARRIAGE INSTALLATION (644E Prior to SN 0160048717, Excluding 0160045421; 944E Prior to SN 0160041827)

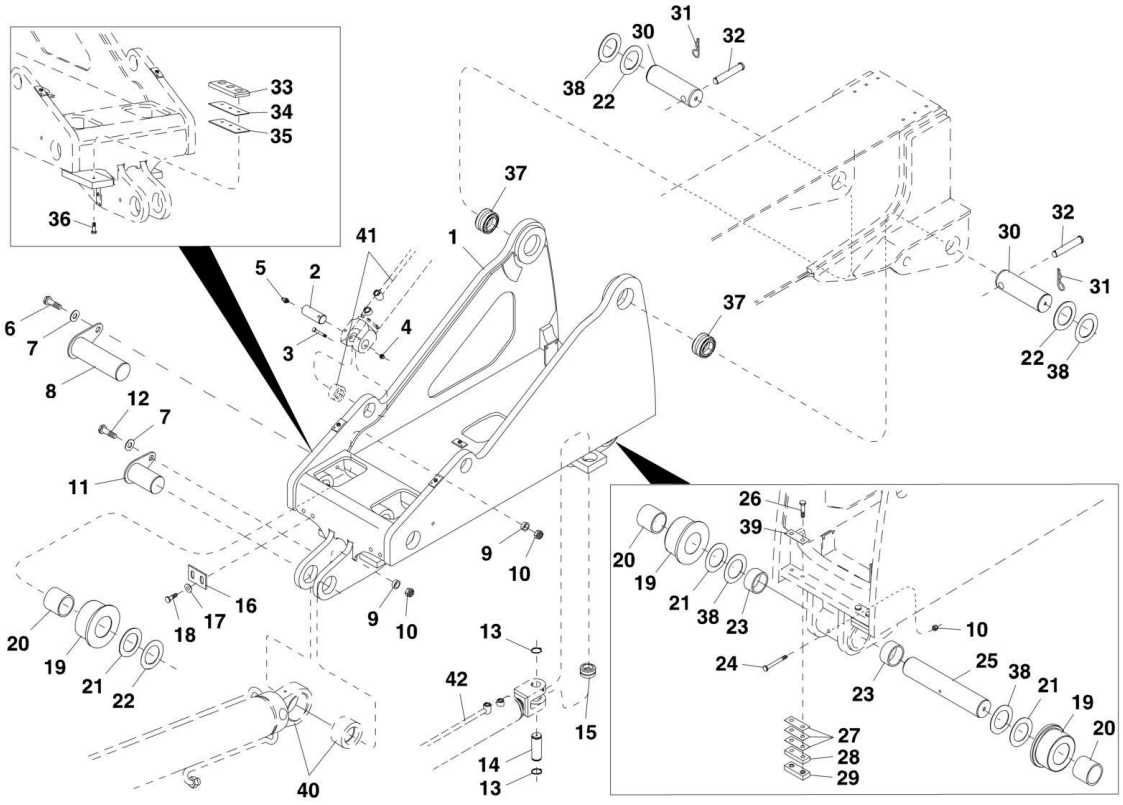

FIGURE 2-10. TRANSFER CARRIAGE INSTALLATION (644E Prior to SN 0160048717, Excluding 0160045421; 944E Prior to SN 0160041827)

ITEM	PART NUMBER	QTY	DESCRIPTION	REV
1	7301102	1	TRANSFER CARRIAGE	
2	7137142	2	CYLINDER PIN	
3	8310424	2	HEX HD CAPSCREW, M8X90, GR8.8	
4	8305654	2	HEX LOCKNUT, M8X1.25mm	
5	8520001	2	LUBE FITTING, 1/8	
6	8303531	2	HEX HD CAPSCREW, M12X65, GR8.8	
7	8310657	3	PLAIN WIDE WASHER, 12mm	
8	7139915	2	RETENTION PIN	
9	7139886	3	RETENTION PIN SPACER	
10	8310625	4	HEX LOCKNUT, M12X1.75	
11	7300580	1	HOIST CYLINDER BASE PIN	
12	8310218	1	HEX HD CAPSCREW, M12X55, GR8.8	
13	8630026	2	EXTERNAL SNAP RING, 38mm	
14	7300503	1	TRANSFER CYLINDER PIN	
15	8050001	1	SELF ALIGN BEARING	
16	7301308	2	SCRAPER PLATE	
17	8307221	4	PLAIN WASHER, 10mm	
18	8303798	4	HEX HD CAPSCREW, M10X25, GR8.8	
19	7139911	4	ROLLER ASSY, (includes item 20)	
20	8050086	4	BEARING	
21	8310689	AR	SHIM WASHER, SELF LUBE, 3.00X4.50X0.08	
22	8307913	AR	SHIM WASHER, SELF LUBE, 3.060X.120X4.750	
23	7300716	2	BUSHING, 3X3.75X2.50	
24	8310655	1	HEX HD CAPSCREW, M12X140, GR8.8	
25	7300566	1	REAR TRANSFER ROLLER PIN	
26	8310220	4	HEX HD CAPSCREW, 1/2-20X2-1/4, GR5	
27	10118167	AR	REAR ROLLER SUPPORT SHIM, (11 GA)	
28	7301033	2	REAR RETAINER SPACER	
29	10165950	2	REAR ROLLER RETAINER SLIDE BLOCK	
30	7300572	2	BOOM PIVOT PIN	
31	8302446	2	BOOM PIVOT CLEVIS COTTER PIN	
32	8310662	2	BOOM PIVOT PIN CLEVIS	
33	7300034	2	WEAR PAD, (includes inserts)	
34	7126182	AR	SHIM, 3.42mm, (10 GA)	
35	7126172	AR	SHIM, 1.90mm, (14 GA)	
36	8303778	4	HEX HD CAPSCREW, M10X40, GR8.8	
37	8050085	2	BEARING	
38	8307912	AR	SHIM WASHER, 3.060X.060X4.750	
39	10165110	AR	REAR ROLLER SUPPORT SHIM, (II GA)	
40		Ref	LIFT CYLINDER, (See HYDRAULIC COMPONENTS SECTION for Breakdown)	
41		Ref	TILT COMPENSATION CYLINDER, (See HYDRAULIC COMPONENTS SECTION for Breakdown)	
42		Ref	TRANSFER CYLINDER, (See HYDRAULIC COMPONENTS SECTION for Breakdown)	

FIGURE 2-11. TRANSFER CARRIAGE INSTALLATION (644E SN 0160048717 to Present, Including 0160045421; 944E SN 0160041827 to Present)

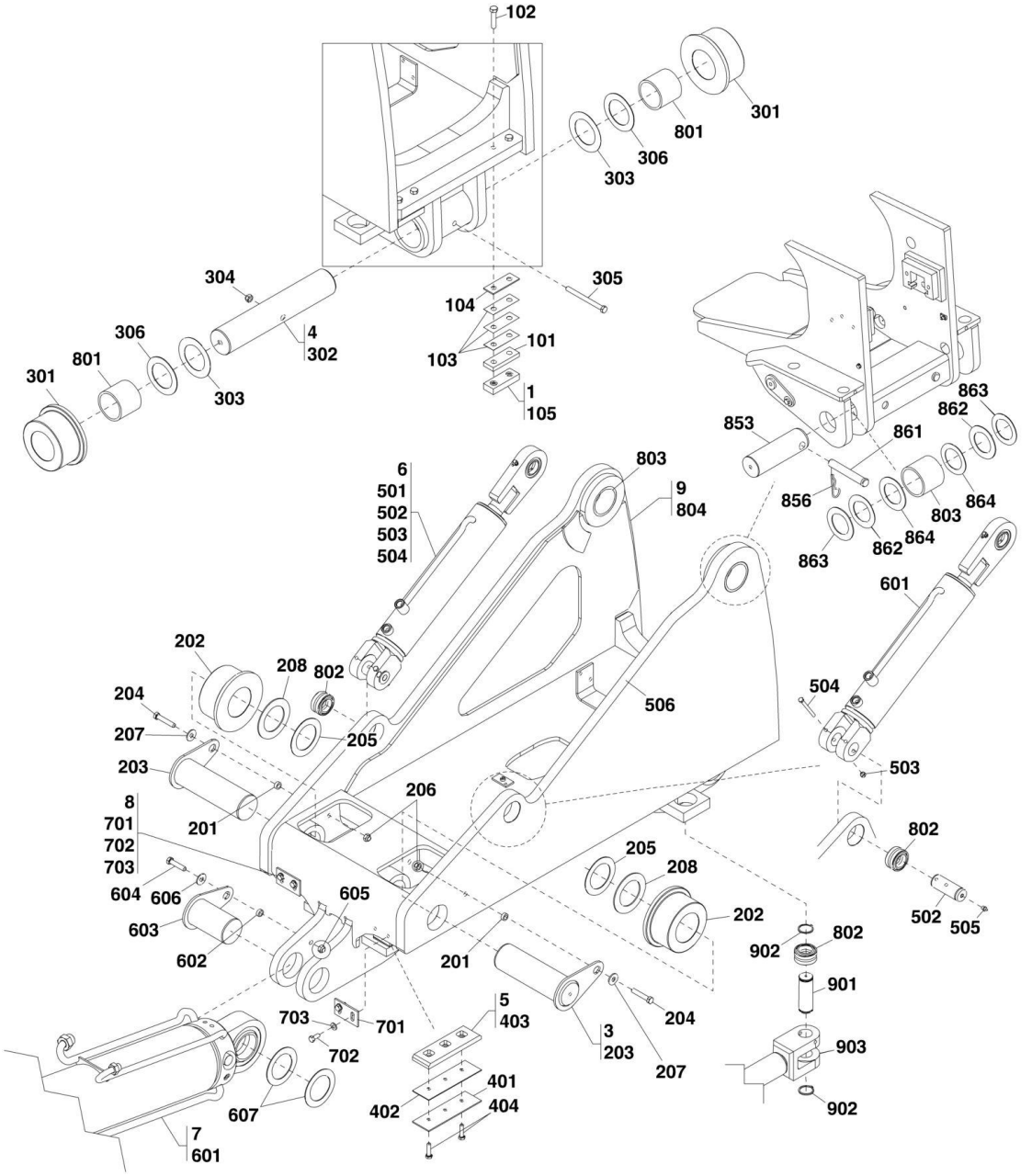

FIGURE 2-11. TRANSFER CARRIAGE INSTALLATION (644E SN 0160048717 to Present, Including 0160045421; 944E SN 0160041827 to Present)

ITEM	PART NUMBER	QTY	DESCRIPTION	REV
	1001143084	Ref	TRANSFER CARRIAGE INSTALLATION, (644E), (not available to order, see items 1 thru 9 for service)	A
	1001125709	Ref	TRANSFER CARRIAGE INSTALLATION, (944E), (not available to order, see items 1 thru 9 for service)	B
1	7139956	Ref	REAR PAD INSTALLATION, (not available to order, see items 101 thru 105 for service)	F
2		Ref	HYDRAULIC COMPONENTS, (not shown), (See HYDRAULIC CIRCUITS SECTION for Breakdown)	
3	7300565	Ref	FRONT ROLLER INSTALLATION, (not available to order see items 201 thru 208 for service)	E
4	7300622	Ref	REAR ROLLER INSTALLATION, (not available to order, see items 301 thru 306 for service)	E
5	7300955	Ref	FRONT RETAINER INSTALLATION, (not available to order, see items 401 thru 404 for service)	AA
6	7139951	Ref	TILT COMPENSATION CYLINDER INSTALLATION, (644E), (not available to order, see items 501 thru 506 for service)	D
6	7301198	Ref	TILT COMPENSATION CYLINDER INSTALLATION, (944E), (not available to order, see items 501 thru 506 for service)	B
7	7139952	Ref	LIFT CYLINDER INSTALLATION, (644E), (not available to order, see items 601 thru 607 for service)	E
7	7301199	Ref	LIFT CYLINDER INSTALLATION, (944E), (not available to order, see items 601 thru 607 for service)	D
8	7301313	Ref	SCRAPER PLATE INSTALLATION, (not available to order, see items 701 thru 703 for service)	C
9	1001125710	Ref	BUSHING INSTALLATION, (not available to order, see items 801 thru 804 for service)	A
101	7301033	2	SPACER	
102	8310220	4	HEX HD CAPSCREW, 1/2-20X2-1/4, GR5, (torque to 51-90 lb-ft/69-122 Nm)	
103	10118167	6	SHIM, 22 GA	
104	1065110	2	SHIM, 11 GA	
105	10165950	2	SLIDE BLOCK	
201	7139886	2	SPACER	
202	7139911	2	ROLLER ASSEMBLY	
202	7139912	1	ROLLER	
202	8050086	1	BEARING	
203	7139915	2	PIN	
204	8303531	2	HEX HD CAPSCREW, M12X65, GR8.8	
205	8307913	2	SHIM	
206	8310625	2	HEX LOCKNUT, M12X1.75, (torque to 44-81 lb-ft/59-106 Nm)	
207	8310657	2	WASHER, 12mm	
208	8310689	1	SELF-LUBE SHIM	
301	7139911	2	ROLLER	
301	7139912	1	ROLLER	
301	8050086	1	BEARING	
302	7300566	1	PIN	
303	8307912	2	SHIM	
304	8310625	1	HEX LOCKNUT, M12X1.75	
305	8310655	1	HEX HD CAPSCREW, M12X140, GR8.8	
306	8310689	2	SELF-LUBE SHIM	
401	7126172	1	SHIM	
402	7126182	1	SHIM	

SECTION 2 - BOOM

ITEM	PART NUMBER	QTY	DESCRIPTION	REV
403	7300034	1	WEAR PAD	
404	8303778	2	HEX HD CAPSCREW, M10X40, GR8.8, (torque to 34-61 Nm)	
501		Ref	TILT COMPENSATION CYLINDER, (See HYDRAULIC COMPONENTS SECTION for Breakdown)	
502	7137142	2	PIN	
503	8305654	2	HEX LOCKNUT, M8X90, (torque to 17-31 Nm/13-23 lb-ft)	
504	8310424	2	HEX HD CAPSCREW, M8X90, GR 8.8	
505	8520001	2	GREASE FITTING	
506	91143220	7 in	TRIM LOCK	
601		Ref	LIFT CYLINDER, (See HYDRAULIC COMPONENTS SECTION for Breakdown)	
602	7139886	1	SPACER	
603	7300580	1	PIN	
604	8310218	1	HEX HD CAPSCREW, M12X55, GR8.8	
605	8310625	1	HEX NUT, M12X1.75, (torque to 59-106 Nm/43-106 lb-ft)	
606	8310657	1	WASHER, 12mm	
607	8310691	2	SELF-LUBE SHIM	
701	7301309	2	SCRAPER PLATE	
702	8303798	4	HEX HD CAPSCREW, M10X25, GR8.8	
703	8307221	4	WASHER, 10mm	
801	7300716	2	BUSHING	
802	805001	3	BEARING	
803	8050085	2	BEARING	
804	1001125711	1	TRANSFER CARRIAGE WELDMENT	
804	7301102	1	TRANSFER CARRIAGE WELDMENT	
853	7300572	2	BOOM PIVOT PIN	
856	8302446	2	COTTER PIN	
861	8310662	2	CLEVIS PIN	
862	8310689	2	SELF-LUBE SHIM	
863	8307912	2	SHIM	
864	8307913	4	SHIM	
901		Ref	PIN, (See FRAME AND ATTACHING PARTS SECTION for Breakdown)	
902		Ref	RETAINING RING, (See FRAME AND ATTACHING PARTS SECTION for Breakdown)	
903		Ref	TRANSFER CYLINDER, (See HYDRAULIC COMPONENTS SECTION for Breakdown)	

SECTION 3 - ATTACHMENTS

FIGURE 3-1. BUCKETS

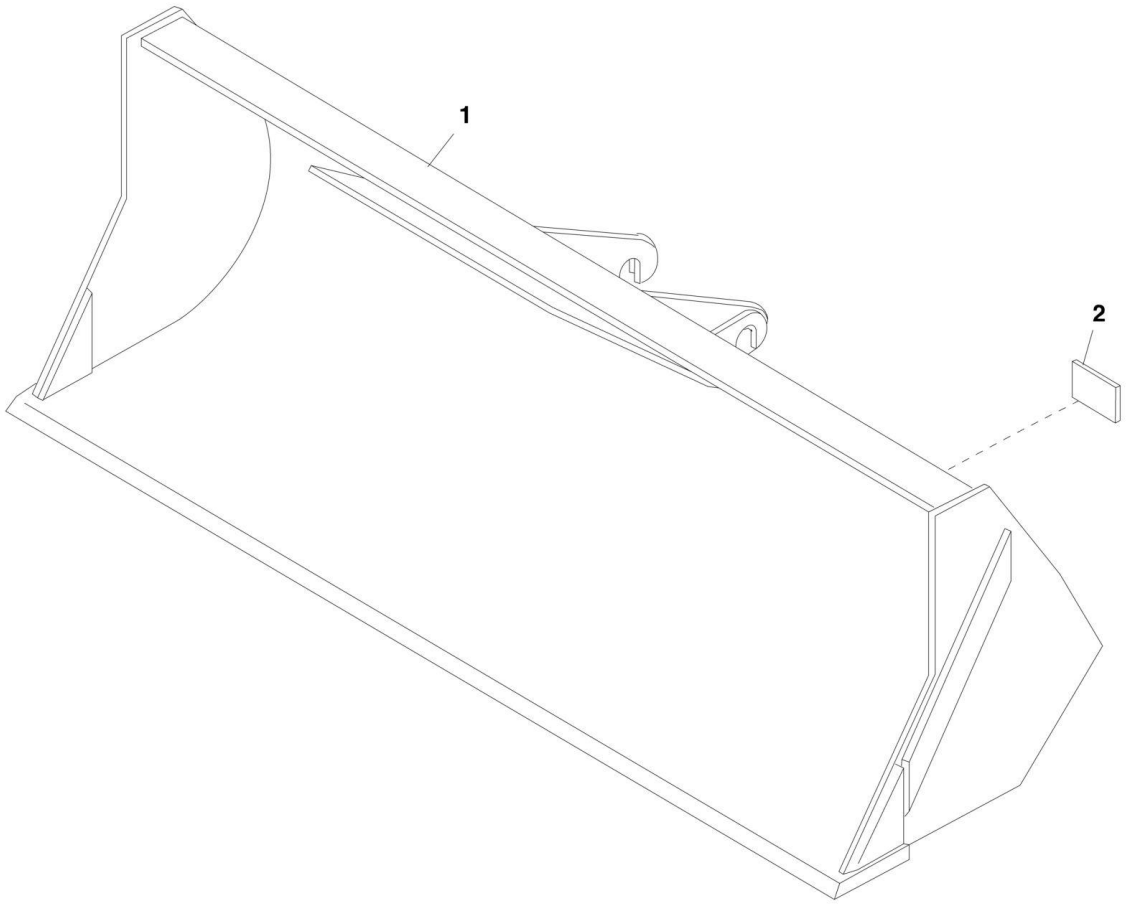

FIGURE 3-1. BUCKETS

ITEM	PART NUMBER	QTY	DESCRIPTION	REV
1	7110744	1	UTILITY BUCKET, 1-1/4³ YD, (includes item 2)	D
1	1001100822	1	72 IN BUCKET, 1.0³ YARD	B
1	1001100823	1	96 IN BUCKET, 1.5³ YARD	B
1	1001100824	1	102 IN BUCKET, 2.0³ YARD	B
2	N.S.S.	1	SN PLATE	

FIGURE 3-2. TILT CARRIAGE (644E Prior to SN 0160034164; 944E Prior to SN 0160034158)

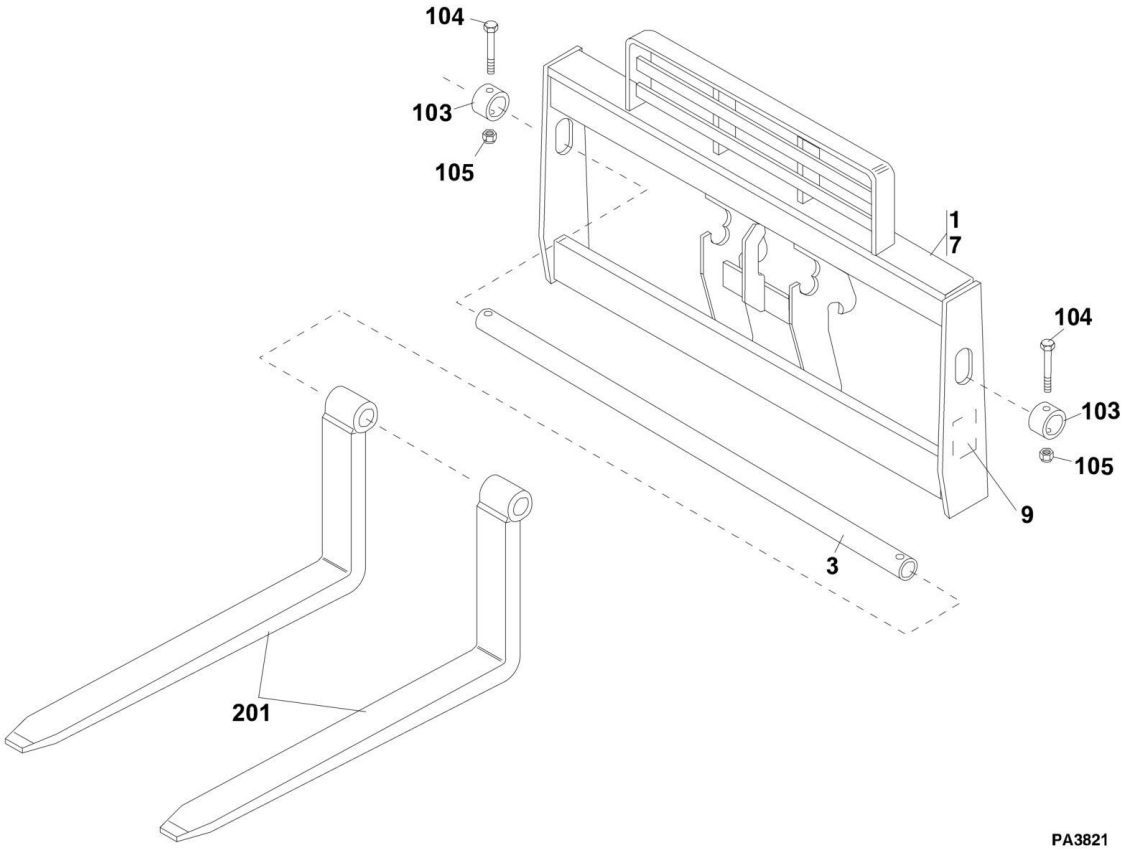

FIGURE 3-2. TILT CARRIAGE (644E Prior to SN 0160034164; 944E Prior to SN 0160034158)

ITEM	PART NUMBER	QTY	DESCRIPTION	REV
	6040500	1	48 IN CARRIAGE, (includes items 1 thru 9)	6
	7161200	1	50 IN CARRIAGE, (includes items 1 thru 9)	6
	6040600	1	60 IN CARRIAGE, (includes items 1 thru 9)	4
	6040700	1	72 IN CARRIAGE, (includes items 1 thru 9)	5
1	N.S.S.	1	CARRIAGE	
3	7128772	1	48 IN FORK PIVOT SHAFT	
3	90451058	1	50 IN FORK PIVOT SHAFT	
3	7128792	1	60 IN FORK PIVOT SHAFT	
3	90551013	1	72 IN FORK PIVOT SHAFT	
7	7118993	NLA	STANDARD CARRIAGE ASSY, (no longer available, use items 103 thru 105 for service)	G
9	N.S.S.	1	SN PLATE	
103	90200003	2	COLLAR	
104	8303634	2	HEX HD CAPSCREW, 5/8-11X4	
105	8305643	2	HEX LOCKNUT, 5/8-11	
201		Ref	FORKS, (See FORKS for Breakdown)	

FIGURE 3-3. TILT CARRIAGE (644E SN 0160034164 through 0160051823; 944E SN 0160034158 through 0160051823)

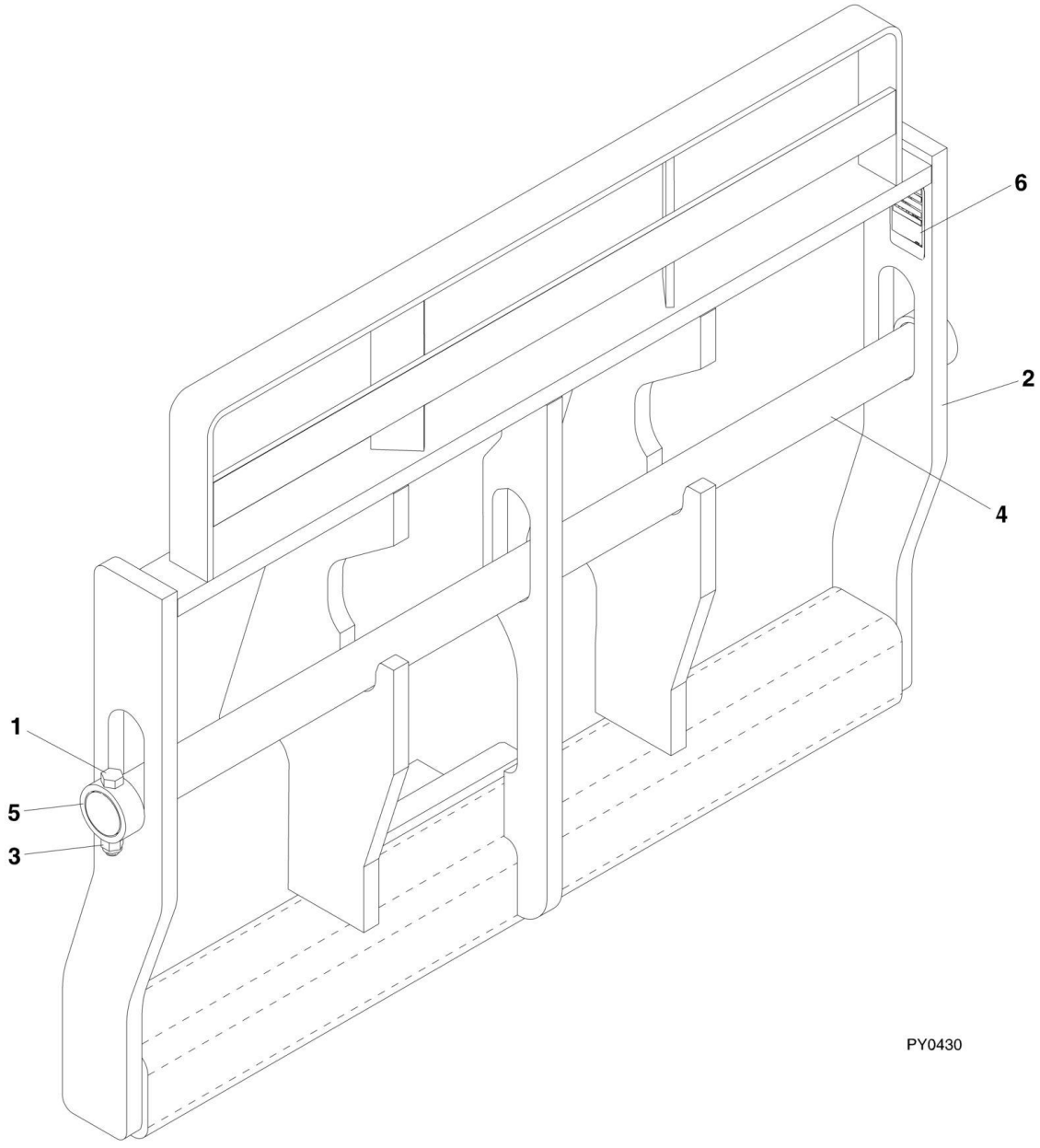

FIGURE 3-3. TILT CARRIAGE (644E SN 0160034164 through 0160051823; 944E SN 0160034158 through 0160051823)

ITEM	PART NUMBER	QTY	DESCRIPTION	REV
	1170021	1	50 IN TILT CARRIAGE, (includes items 1 thru 6)	E
	1170024	1	60 IN TILT CARRIAGE, (includes items 1 thru 6)	E
	1170027	1	72 IN TILT CARRIAGE, (includes items 1 thru 6) **(Prior to SN 0160042912, Excluding 0160025782, 0160025783 and 0160025827)**	E
	1001132514	1	72 IN TILT CARRIAGE, (includes items 1 thru 6) **(SN 0160042912 through 0160051823)**	B
1	0642032	2	HEX HD CAPSCREW, 5/8-11X4, GR5	
2	N.S.S.	1	TILT CARRIAGE	
3	3300240	2	LOCKNUT, 5/8-11	
4	3423275	1	50 IN FORK PIN	
4	3423242	1	60 IN FORK PIN	
4	3423276	1	72 IN FORK PIN	
5	90200003	2	COLLAR	
6	N.S.S.	1	SN PLATE	

FIGURE 3-4. TILT CARRIAGE (644E SN 0160051824 to Present; 944E SN 0160051824 to Present)

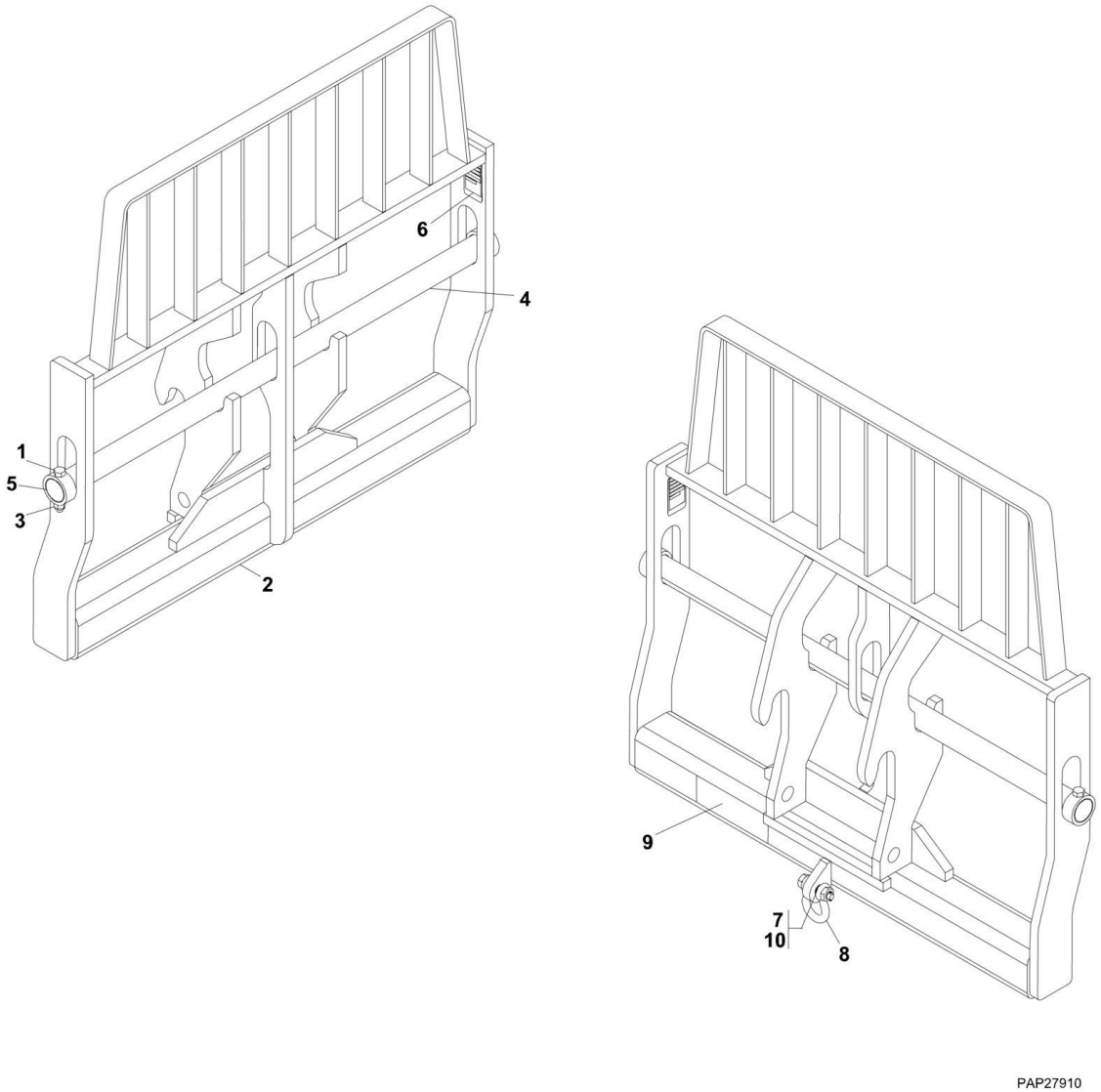

FIGURE 3-4. TILT CARRIAGE (644E SN 0160051824 to Present; 944E SN 0160051824 to Present)

ITEM	PART NUMBER	QTY	DESCRIPTION	REV
	1001146084	1	50 IN TILT CARRIAGE WITH LIFT LUG, (includes all items)	A
	1001146086	1	60 IN TILT CARRIAGE WITH LIFT LUG, (includes all items)	A
	1001146088	1	72 IN TILT CARRIAGE WITH LIFT LUG, (includes all items)	A
1	0642032	2	HEX HD CAPSCREW, 5/8-11X4, GR5	
2	N.S.S.	1	TILT CARRIAGE	
3	3300240	2	LOCKNUT, 5/8-11	
4	3423275	1	50 IN FORK PIN	
4	3423242	1	60 IN FORK PIN	
4	3423276	1	72 IN FORK PIN	
5	90200003	2	COLLAR	
6	N.S.S.	1	SN PLATE	
7	1001146159	1	SLEEVE	
8	1001146160	1	SHACKLE	
9	1001151561	1	DANGER SWINGING LOADS DECAL	
10	0100063	AR	LOCTITE 609, (apply to item 7)	

FIGURE 3-5. SIDE TILT CARRIAGE (Prior to SN 0160037794)

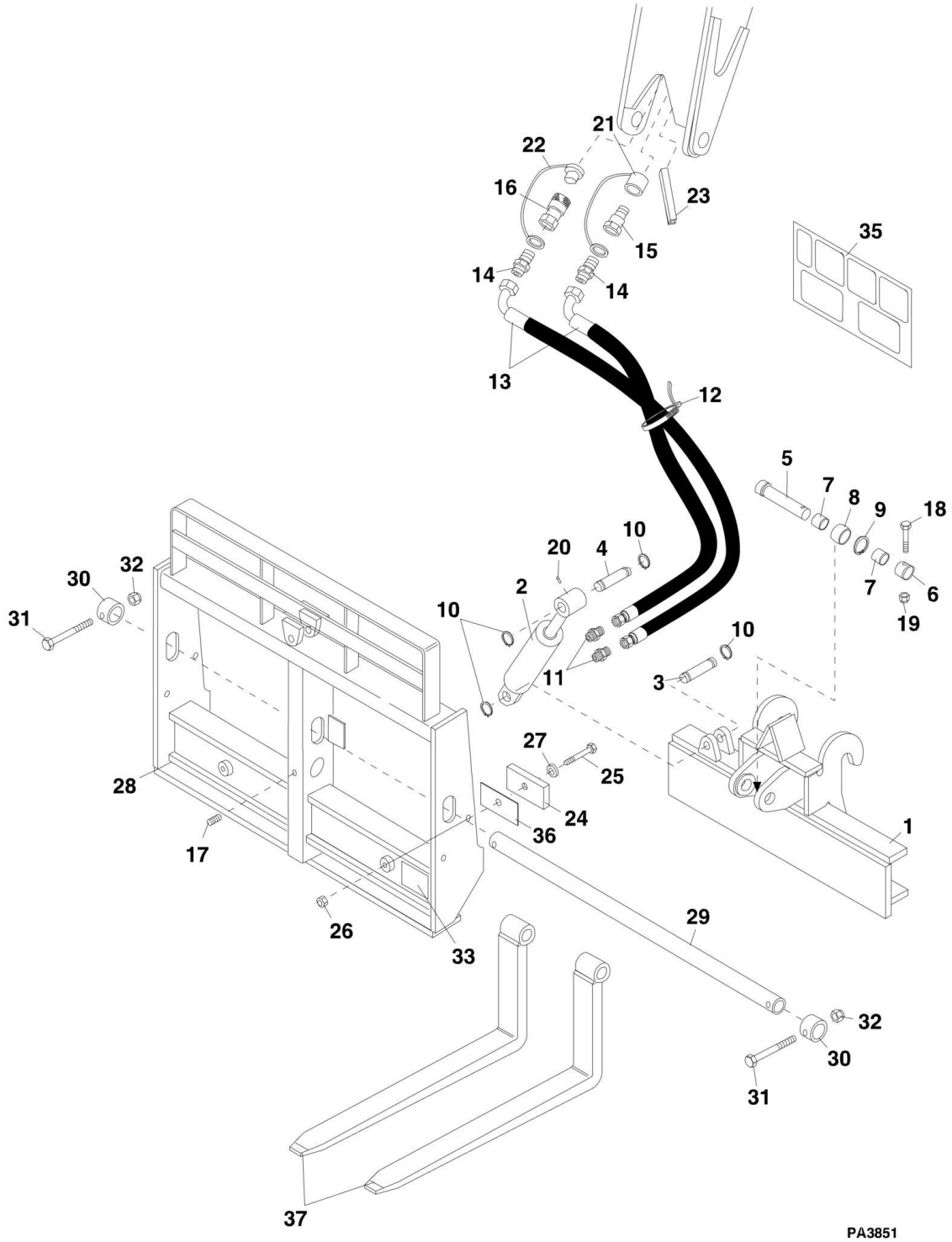

FIGURE 3-5. SIDE TILT CARRIAGE (Prior to SN 0160037794)

ITEM	PART NUMBER	QTY	DESCRIPTION	REV
	7117214	1	SIDE TILT CARRIAGE ASSY, (includes items 1 thru 36)	N
1	7117204	1	PIVOT BASE	
2		Ref	SIDE TILT CYLINDER, (See OPTIONS SECTION for Breakdown)	
3	7077501	1	CYLINDER BASE PIN	
4	7077511	1	CYLINDER ROD PIN	
5	7085411	1	PIVOT PIN	
6	7085501	1	PIN LOCKING COLLAR	
7	7077481	2	SPACER	
8	8065634	1	SELF ALIGN BUSHING	
9	8642001	1	SNAP RING	
10	8642235	4	SNAP RING	
11	2220371	2	STRAIGHT CONNECTOR	
12	8584001	1	TIE WRAP	
13	2711992	2	HOSE ASSY	
14	2220372	2	STRAIGHT CONNECTOR	
15	91403414	1	MALE QUICK DISCONNECT	
15	8640029	1	NOSE SEAL, (not shown)	
16	91403413	1	FEMALE QUICK DISCONNECT	
16	8640029	1	NOSE SEAL, (not shown)	
16	8640028	1	COUPLER BODY SEAL, (not shown)	
16	8640032	1	COUPLER BODY SEAL BACK-UP RING, (not shown)	
17	88671001	1	GREASE FITTING	
18	8303770	1	HEX HD CAPSCREW, 3/8-16X2-3/4	
19	8305645	1	HEX LOCKNUT, 3/8-16	
20	8520013	2	LUBE FITTING	
21	8420053	1	DUST CAP, #8	
22	8420055	1	DUST PLUG, #8	
23	7125741	1	MOULDING	
24	7065482	2	WEAR PAD	
25	8303739	2	HEX HD CAPSCREW, 5/16-18X1-1/4	
26	8305626	2	HEX LOCKNUT, 5/16-18	
27	8307203	2	FLAT HEAVY WASHER	
28	7117244	1	48 IN SIDE TILT CARRIAGE	
28	7300983	1	50 IN SIDE TILT CARRIAGE	
28	7117254	1	60 IN SIDE TILT CARRIAGE	
28	7117264	1	72 IN SIDE TILT CARRIAGE	
29	7128772	1	FORK PIVOT SHAFT, (48 IN carriage)	
29	90451058	1	FORK PIVOT SHAFT, (50 IN carriage)	
29	7128792	1	FORK PIVOT SHAFT, (60 IN carriage)	
29	90551013	1	FORK PIVOT SHAFT, (72 IN carriage)	
30	90200003	2	COLLAR	
31	8303634	2	HEX HD CAPSCREW, 5/8-11X4	
32	8305643	2	HEX LOCKNUT, 5/8-11	
33	N.S.S.	1	SN PLATE	
35	4108232	1	CAPACITY CHART DECAL	
36	7070191	AR	SHIM	
37		Ref	FORKS, (See FORKS for Breakdown)	

FIGURE 3-6. SIDE TILT CARRIAGE (SN 0160037794 to Present)

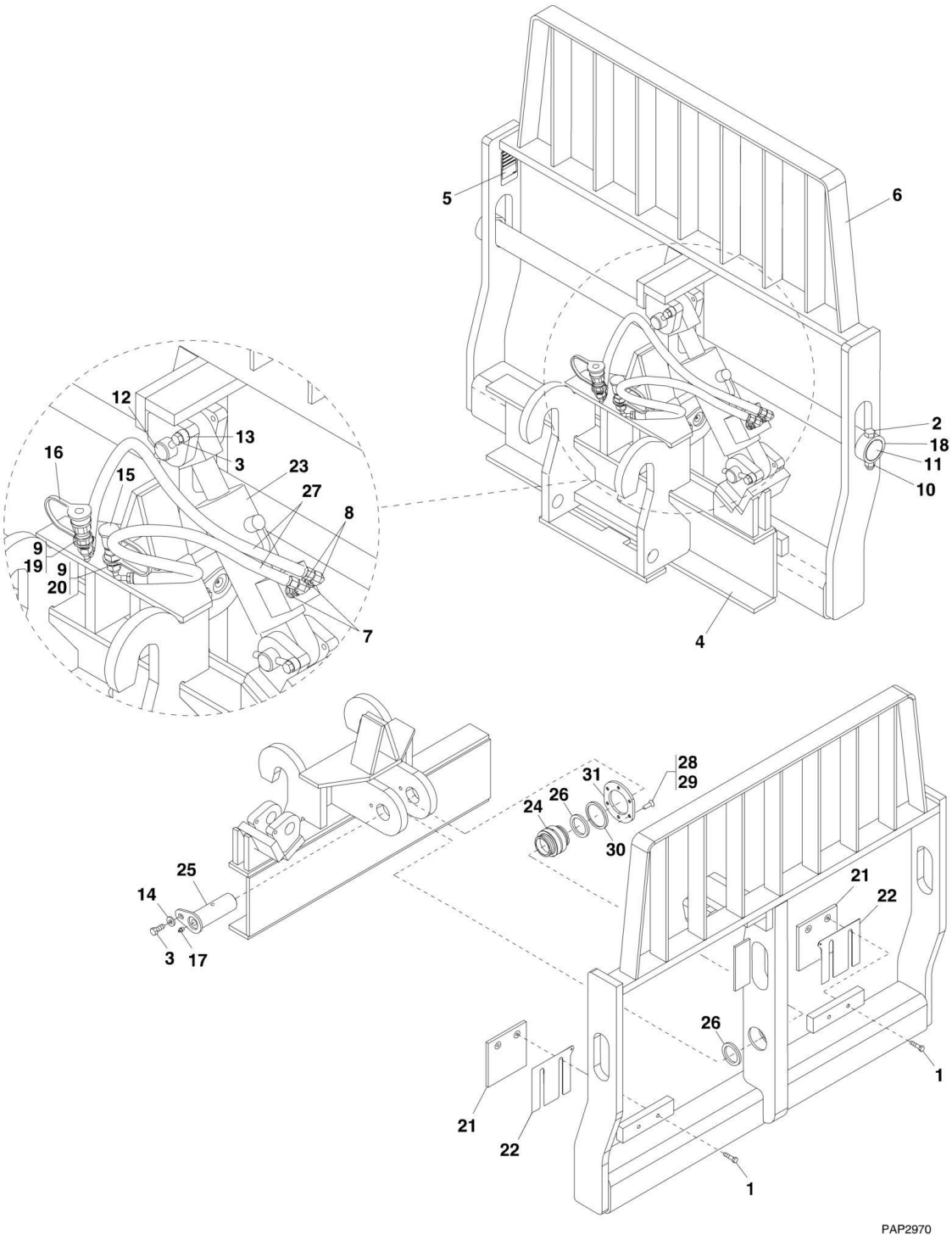

FIGURE 3-6. SIDE TILT CARRIAGE (SN 0160037794 to Present)

ITEM	PART NUMBER	QTY	DESCRIPTION	REV
	1170054	1	50 IN SIDE TILT CARRIAGE, (includes all items)	H
	1001101956	1	60 IN SIDE TILT CARRIAGE, (includes all items)	H
	1170057	1	72 IN SIDE TILT CARRIAGE, (includes all items)	H
1	0641612	4	HEX HD CAPSCREW, 3/8-16X1-1/2	
2	0642032	2	HEX HD CAPSCREW, 5/8-11X4	
3	0681810	3	HEX HD CAPSCREW, 1/2-13X1-1/4	
4	1001133072	1	CARRIAGE BASE	
5	N.S.S.	1	SN PLATE	
6	N.S.S.	1	SIDE TILT CARRIAGE	
7	2110606	2	CONNECTOR	
8	2172106	2	CONNECTOR, 90	
9	2110808	2	CONNECTOR, (50 IN Side Tilt Carriage)	
9	2110608	2	CONNECTOR, (60 IN Side Tilt Carriage)	
9	2110808	2	CONNECTOR, (72 IN Side Tilt Carriage)	
10	3300240	2	LOCK NUT, 5/8-11	
11	3423275	1	50 IN FORK PIN	
11	3423242	1	60 IN FORK PIN	
11	3423276	1	72 IN FORK PIN	
12	3423307	2	PIN	
13	3841203	2	KEEPER	
14	4891800	1	WASHER, 1/2	
15	8420053	1	DUST CAP	
16	8420055	1	DUST PLUG	
17	88671001	1	GREASE FITTING	
18	90200003	2	COLLAR	
19	91403413	1	CONNECTOR	
20	91403414	1	CONNECTOR	
21	1001090063	2	WEAR PAD	
22	1001090064	AR	SHIM	
23		Ref	HYDRAULIC CYLINDER, (See HYDRAULIC COMPONENTS SECTION for Breakdown)	
24	1001090140	1	BEARING	
25	1001099113	1	PIN	
26	1001099115	2	SLEEVE	
27	1001102378	2	HOSE ASSY, 3/8X39	
28	0100011	AR	LOCTITE 242	
29	0741610	6	FLAT HEAD SOCKET SCREW, 3/8-16	
30	1001120914	1	BEARING RETAINER SHIM	
31	1001120915	1	BEARING RETAINER PLATE	

FIGURE 3-7. SWING CARRIAGE (Prior to SN 0160037794)

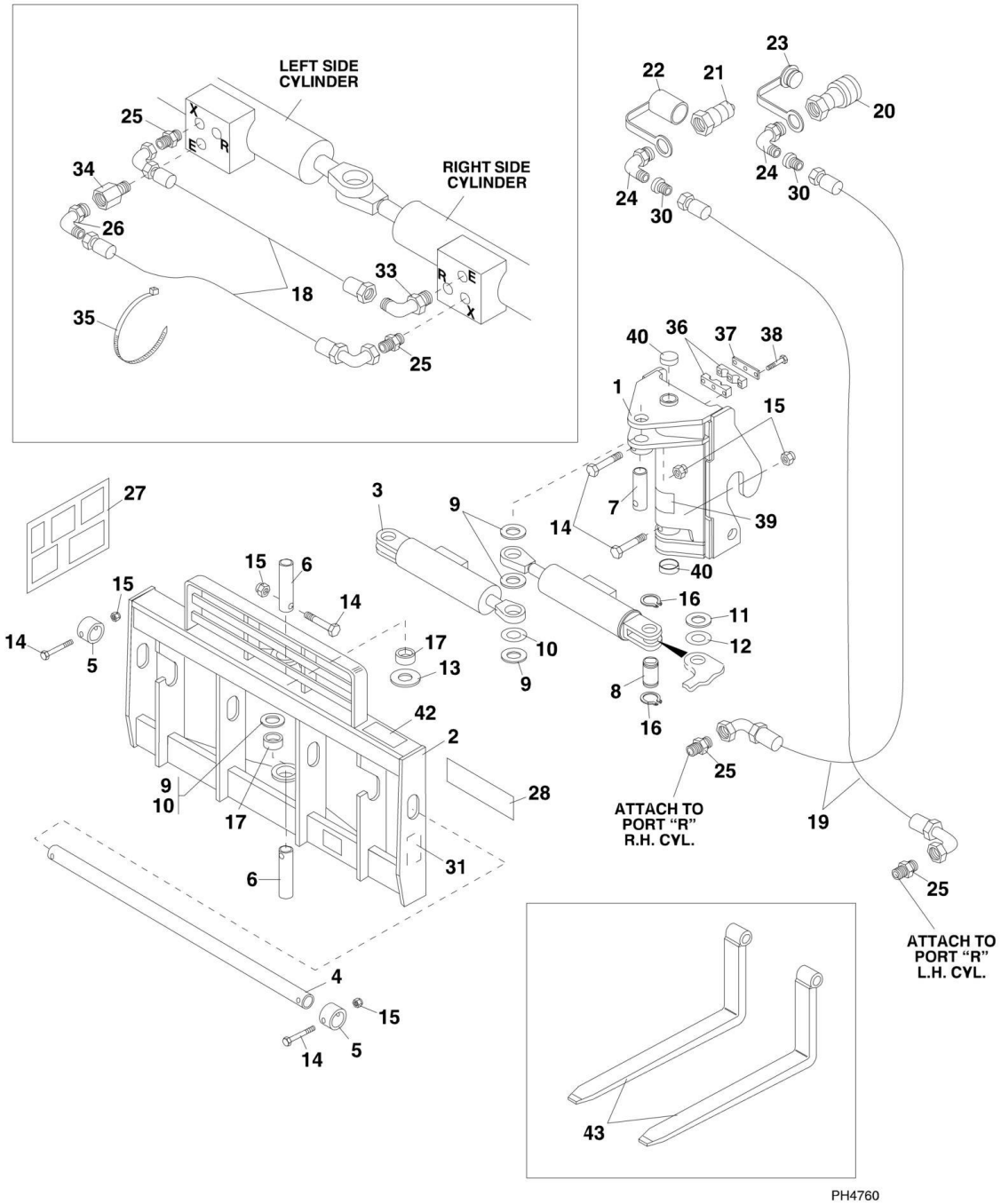

FIGURE 3-7. SWING CARRIAGE (Prior to SN 0160037794)

ITEM	PART NUMBER	QTY	DESCRIPTION	REV
	7125800	1	72 IN SWING CARRIAGE ASSY, (includes items 1 thru 42)	
1	7110494	1	PIVOT BASE	
2	7110694	1	72 IN CARRIAGE	
3		Ref	SWING CARRIAGE CYLINDER, (See OPTIONS SECTION for Breakdown)	
4	90551013	1	FORK PIVOT SHAFT	
5	90200003	2	COLLAR	
6	7110702	2	CARRIAGE PIVOT PIN	
7	7110712	1	CYLINDER PIVOT PIN, (rod end)	
8	7110722	2	CYLINDER PIVOT PIN, (base end)	
9	8307918	AR	SHIM, 2 IDX10 GA	
10	8307904	AR	SHIM, 2 IDX18 GA	
11	8310161	AR	SHIM, 1-1/2 IDX10 GA	
12	8310160	AR	SHIM, 1-1/2 IDX18 GA	
13	7062922	1	THRUST BEARING	
14	8303634	5	HEX HD CAPSCREW, 5/8-11X4	
15	8305643	5	HEX LOCKNUT, 5/8-11	
16	8642207	4	RETAINING RING	
17	8065062	2	SELF LUBE BEARING	
18	6604662	2	HOSE ASSY	
19	2717287	2	HOSE ASSY	
20	91403413	1	FEMALE QUICK DISCONNECT	
20	8640029	1	SEAL NOSE, (not shown)	
20	8640028	1	COUPLER BODY SEAL, (not shown)	
20	8640032	1	COUPLER BODY SEAL BACK-UP RING, (not shown)	
21	91403414	1	MALE QUICK DISCONNECT	
21	8640029	1	NOSE SEAL, (not shown)	
22	8420053	1	DUST CAP, #8	
23	8420055	1	DUST PLUG, #8	
24	2220628	2	ELBOW, 90	
25	2220415	4	STRAIGHT CONNECTOR	
26	2220473	1	ELBOW, 90	
27	4107692	2	CAPACITY CHART DECAL	
28	4107702	1	TIP OVER HAZARD DANGER DECAL	
30	2220609	2	TUBE END REDUCER, 6-4	
31	N.S.S.	1	SN PLATE	
33	2220775	1	ELBOW, 90	
34	8770016	1	REDUCER	
35	8584001	5	Tie Wrap	
36	8769132	2	CLAMP HALF	
37	6608621	1	CLAMP COVER	
38	8303715	3	HEX HD CAPSCREW, 5/16-18X1-1/2	
39	4107712	1	NO TRUSS BOOM DANGER DECAL	
40	8580315	2	TRIM PLUG, 2-1/2 DIA	
42	4110473	1	HOSE ROUTING DECAL	
43		Ref	FORKS, (See FORKS for Breakdown)	

FIGURE 3-8. SWING CARRIAGE (SN 0160037794 to Present)

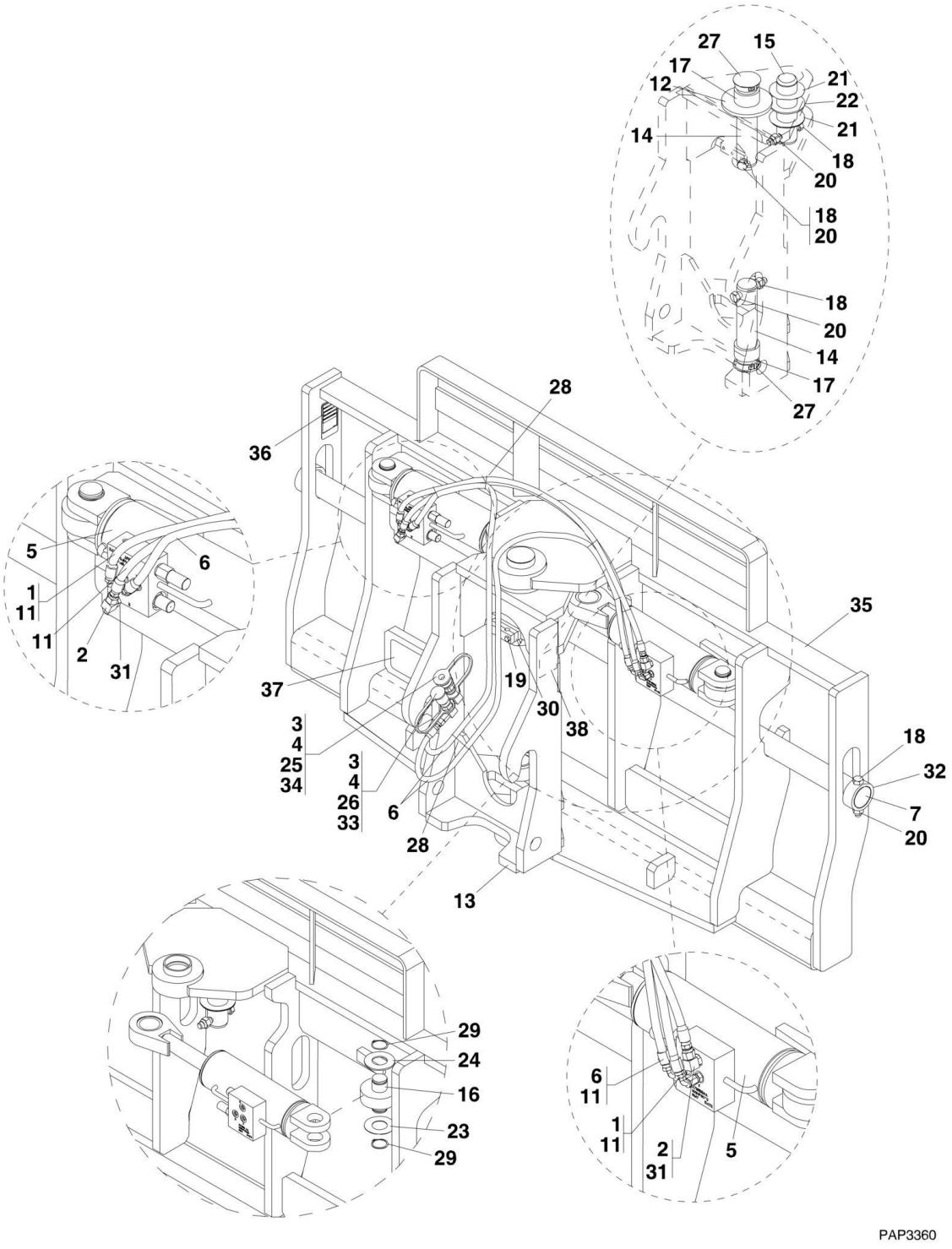

FIGURE 3-8. SWING CARRIAGE (SN 0160037794 to Present)

ITEM	PART NUMBER	QTY	DESCRIPTION	REV
	1001095418	1	72 IN 90, SWING CARRIAGE, (includes all items)	K
1	2220415	4	CONNECTOR	
2	2220473	2	CONNECTOR, 90	
3	2220609	2	CONNECTOR	
4	2220628	2	CONNECTOR, 90	
5		Ref	SWING CYLINDER, (See HYDRAULIC COMPONENTS SECTION for Breakdown)	
6	2717287	2	HOSE ASSY, 1/4X58	
7	3423276	1	PIN	
11	6604662	2	HOSE ASSY, 1/4X40.5	
12	7062922	1	WASHER	
13	N.S.S.	1	PIVOT WELDMENT	
14	7110702	2	PIVOT PIN	
15	7110712	1	PIN	
16	7110722	2	PIN	
17	8065062	2	BUSHING	
18	8303634	5	HEX HD CAPSCREW, 5/8-11X4, GR5	
19	8303715	3	HEX HD CAPSCREW, 5/16-18X1.5, GR5	
20	8305643	5	HEX NUT, 5/8-11	
21	8307904	AR	SHIM	
22	8307918	AR	SHIM	
23	8310160	AR	SHIM	
24	8310161	AR	SHIM	
25	8420053	1	DUST CAP	
26	8420055	1	DUST PLUG	
27	8580315	2	PLUG	
28	8584001	5	TIE WRAP	
29	8642207	4	RETAINING RING	
30	8769132	2	CLAMP	
31	8770016	2	CONNECTOR	
32	90200003	2	COLLAR	
33	91403413	1	CONNECTOR	
34	91403414	1	CONNECTOR	
35	N.S.S.	1	CARRIAGE FRAME	
36	N.S.S.	1	SN PLATE	
37	1001110704	1	WARNING CRUSH HAZARD DECAL	
38	1001111190	2	WARNING DECAL	

FIGURE 3-9. SHEET MATERIAL HANDLER (Prior to SN 0160037794)

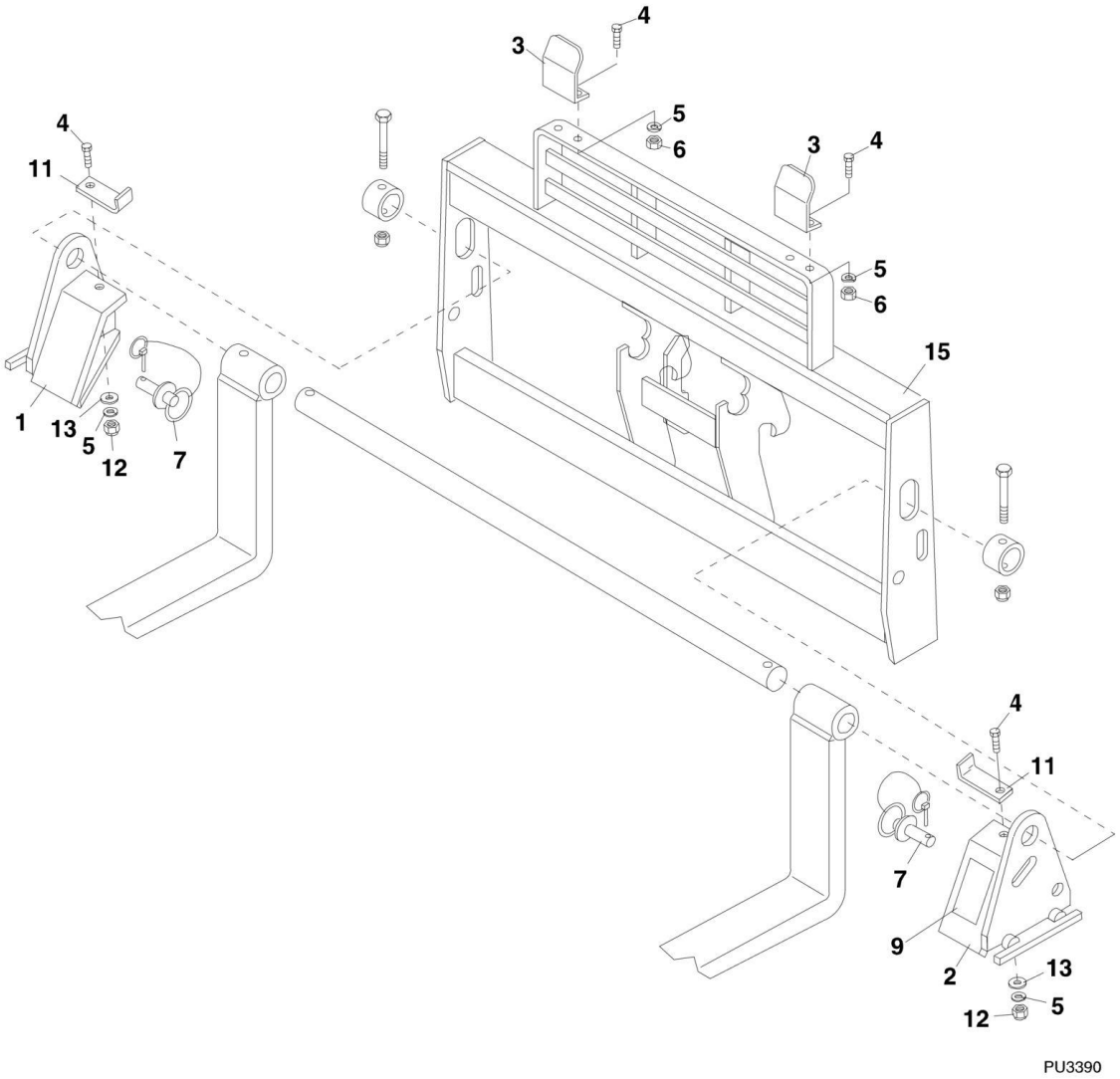

FIGURE 3-9. SHEET MATERIAL HANDLER (Prior to SN 0160037794)

ITEM	PART NUMBER	QTY	DESCRIPTION	REV
	7129300	1	SHEET MATERIAL HANDLER WITH 72 IN SWING CARRIAGE ASSY, (includes items 1 thru 13)	
	7112704	1	SHEET MATERIAL HANDLER WITH 72 IN SWING CARRIAGE ASSY, (includes items 1 thru 13)	E
1	7112533	1	RIGHT SIDE FORK SUPPORT	
2	7112523	1	LEFT SIDE FORK SUPPORT	
3	7112642	2	BACKREST EXTENSION	
4	8303626	6	HEX HD CAPSCREW, 1/2-13X1-1/2	
5	8307007	6	LOCKWASHER, 1/2	
6	8305012	4	HEX NUT, 1/2-13	
7	8301456	2	HITCH PIN	
9	N.S.S.	2	SN PLATE	
11	7114941	2	Lock Bar	
12	8305644	2	HEX LOCKNUT, 1/2-13	
13	8307112	2	FLAT WASHER, 1/2	
15		Ref	72 IN SWING CARRIAGE, (See SWING CARRIAGE for Breakdown)	

FIGURE 3-10. SHEET MATERIAL HANDLER (SN 0160037794 to Present)

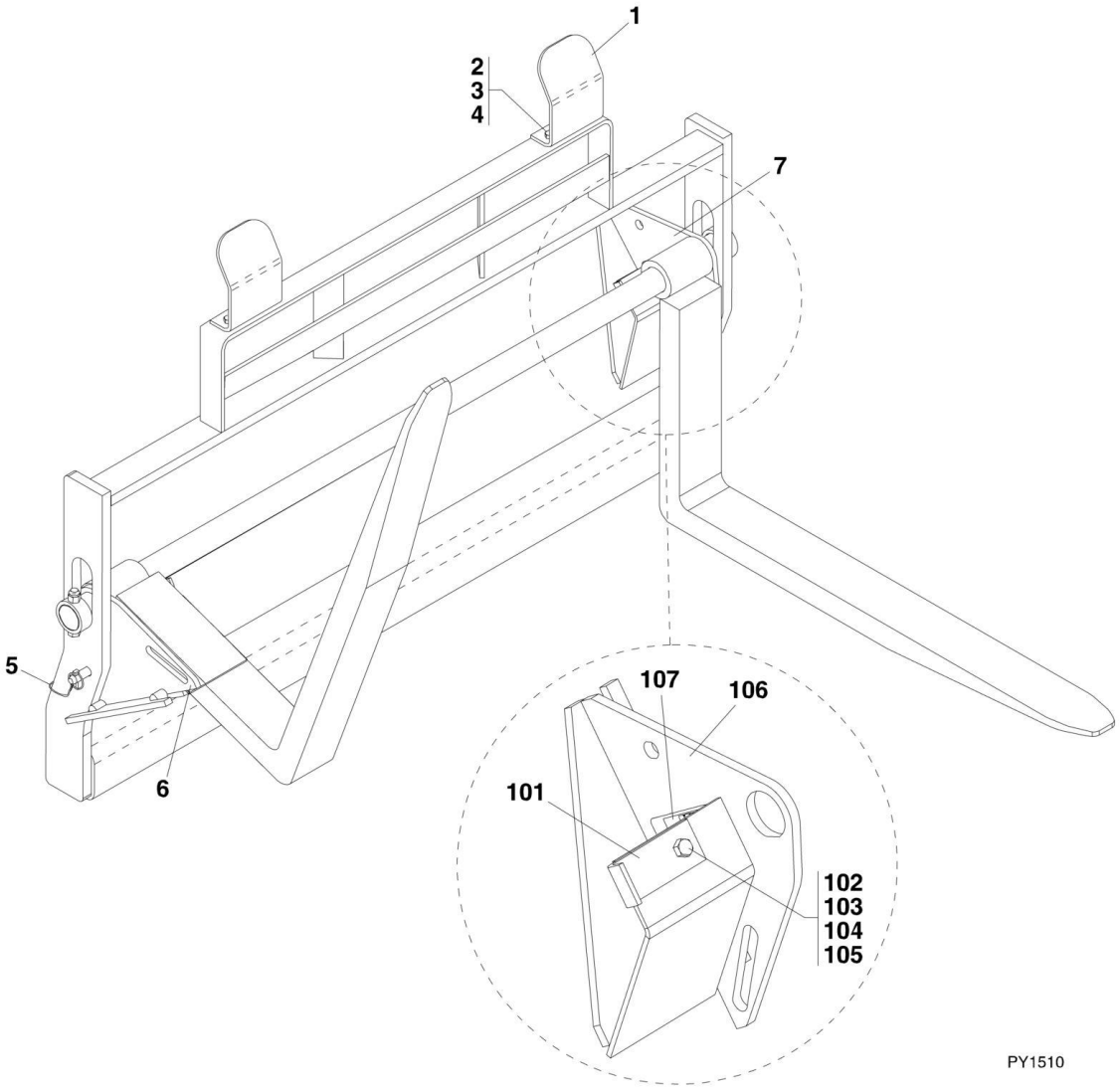

FIGURE 3-10. SHEET MATERIAL HANDLER (SN 0160037794 to Present)

ITEM	PART NUMBER	QTY	DESCRIPTION	REV
	1001100227	1	SHEET MATERIAL HANDLER ASSY, (includes all items)	A
1	7112642	2	BACKREST EXTENSION	
2	8303626	4	HEX HD CAPSCREW, 1/2-13X1-1/2 GR5	
3	8305012	4	HEX NUT, 1/2-13	
4	8307007	4	LOCKWASHER, 1/2	
5	1001093377	2	HITCH PIN	
6	1001101115	1	FORK SUPPORT ASSY, RH, (includes items 101 thru 107)	A
7	1001101116	1	FORK SUPPORT ASSY, LH, (includes items 101 thru 107)	B
101	7114941	1	LOCK BAR	
102	8303626	1	HEX HD CAPSCREW, 1/2-13X1-1/2 GR5	
103	8305644	1	HEX LOCK NUT, 1/2-13	
104	8307007	1	LOCKWASHER, 1/2	
105	8307112	1	WASHER, 1/2	
106	1001100228	1	FORK SUPPORT, RH (not shown)	
106	1001100229	1	FORK SUPPORT, LH (shown)	
107	N.S.S.	1	SN PLATE	

FIGURE 3-11. 3 FT TRUSS BOOM WITH WINCH

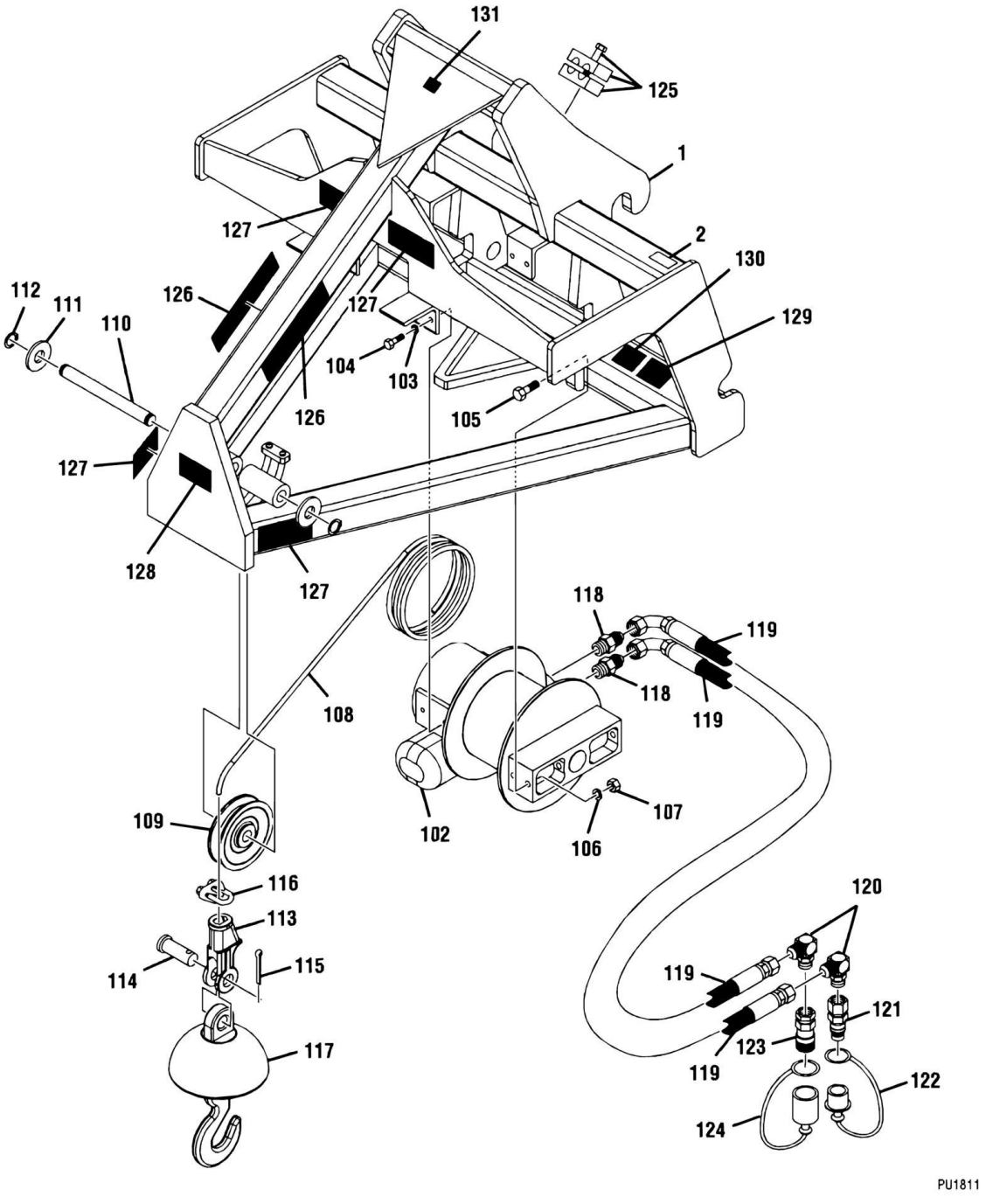

FIGURE 3-11. 3 FT TRUSS BOOM WITH WINCH

ITEM	PART NUMBER	QTY	DESCRIPTION	REV
	7139608	1	3 FT TRUSS BOOM WITH WINCH, (includes all items) **(644E SN 17569 through 20123, SN 0160002514 through 0160034057; 944E SN 17569 through 20123, SN 0160002514 through 0160033846)**	
	1001100967	1	3 FT TRUSS BOOM WITH WINCH, (includes items 1 & 2) **(644E SN 0160034058 to Present; 944E SN 0160033847 to Present)**	A
1	8380008	1	3 FT TRUSS BOOM WITH WINCH, (includes items 102 thru 131)	
2	N.S.S.	1	SN PLATE	
3	7301040	1	LOAD CHART BOOKLET, (not shown)	
102	70021921	1	WINCH	
103	90554042	4	LOCKWASHER, 3/8	
104	70021349	4	HEX HD CAPSCREW, 3/8X1	
105	70024059	2	HEX HD CAPSCREW, 1/2X1-3/4	
106	90554020	2	LOCKWASHER, 1/2	
107	90554054	2	HEX NUT, 1/2	
108	70022028	1	CABLE	
109	70021935	1	PULLEY	
110	70022529	1	PIN	
111	70024060	2	HARDENED FLAT WASHER	
112	70024061	2	SNAP RING	
113	70021979	1	SOCKET ASSY, (includes items 114 & 115)	
114	N.S.S.	1	PIN	
115	N.S.S.	1	COTTER PIN	
116	70022528	1	CLAMP	
117	70021978	1	BALL SWIVEL WITH SAFETY HOOK	
118	2220371	2	CONNECTOR	
119	70021977	2	HOSE ASSY, 3/8X32	
120	2220628	2	ELBOW, 90	
121	91403413	1	QUICK DISCONNECT COUPLER	
122	91043126	1	DUST CAP	
123	91403414	1	QUICK DISCONNECT NIPPLE	
124	91043125	1	DUST PLUG	
125	70021387	1	CLAMP	
126	70024062	2	CAPACITY DECAL	
127	70024063	4	ROTATING PART DECAL	
128	70024064	1	DO NOT TOW DECAL	
129	N.S.S.	1	SN PLATE	
130	90554018	1	WARNING HIGH PRESSURE DECAL	
131	90554016	1	MADE IN USA DECAL	

FIGURE 3-12. 10 FT TRUSS BOOM WITH WINCH (Prior to SN 0160037794)

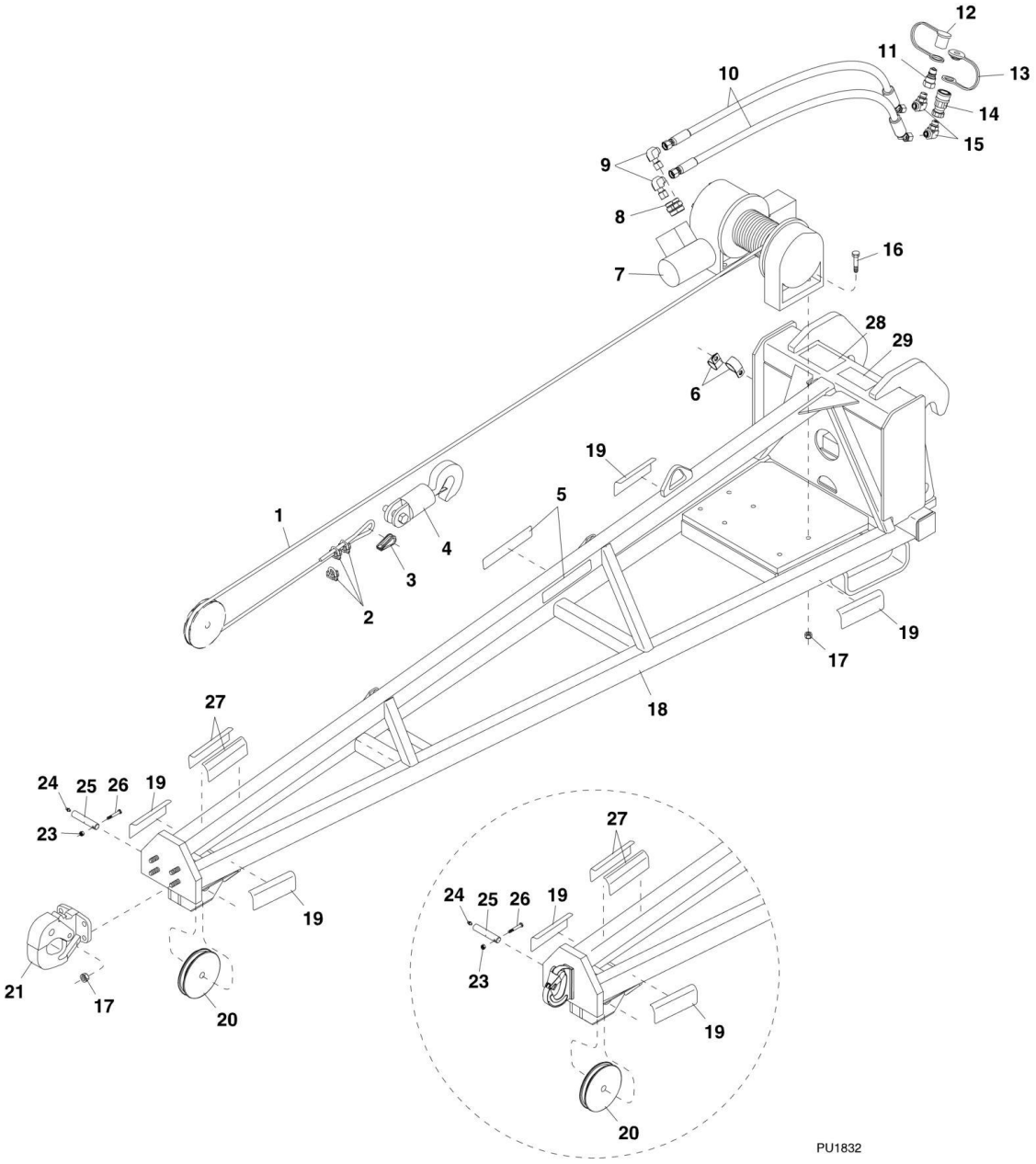

644E - SN 0160032221 TO PRESENT
944E - SN 0160032117 TO PRESENT

FIGURE 3-12. 10 FT TRUSS BOOM WITH WINCH (Prior to SN 0160037794)

ITEM	PART NUMBER	QTY	DESCRIPTION	REV
	7301179	1	10 FT TRUSS BOOM WITH WINCH ASSY, (includes all items)	F
1	1012355	1	WIRE ROPE ASSY, 3/8X75	
2	10721557	3	WIRE CLIP, 3/8	
3	10721556	1	THIMBLE, 3/8	
4	10267585	1	HOOK ASSY	
5	4110412	2	CAPACITY DECAL	
6	8406302	2	HOSE CLAMP	
7	10727770	1	HYDRAULIC WINCH WITH BRAKE	
7	70021573	1	WINCH MOTOR	
8	2110810	2	CONNECTOR	
9	2172108	2	ELBOW, 90, (swivel nut)	
10	2717093	2	HOSE ASSY	
11	91403414	1	QUICK DISCONNECT NIPPLE	
12	8420053	1	DUST CAP, #8	
13	8420055	1	DUST PLUG, #8	
14	91403413	1	QUICK DISCONNECT COUPLER	
15	2130808	2	ELBOW, 90	
16	10700484	6	HEX HD CAPSCREW, 1/2-20X2-1/4, GR8	
17	11419080	10	HEX LOCKNUT, 1/2-20 **(644E Prior to SN 0160032221; 944E Prior to SN 0160032117)**	
17	11419080	6	HEX LOCKNUT, 1/2-20 **(644E SN 0160032221 to Present; 944E SN 0160032117 to Present)**	
18	7301191	1	10 FT TRUSS BOOM	
19	4110252	4	PINCH POINT/ENTANGLEMENT HAZARD DECAL	
20	10727327	1	Sheave	
21	8382017	1	PINTLE HOOK **(644E Prior to SN 0160032221; 944E Prior to SN 0160032221)**	
23	11170040	1	LOCKNUT, 1/4-28	
24	11160110	1	STRAIGHT GREASE FITTING, 1/4-28	
25	10125085	1	PIN	
26	11045080	1	HEX HD CAPSCREW, 1/4-28X2, GR5	
27	4110422	2	DANGER SWINGING LOADS DECAL	
28	4110424	1	HOSE ROUTE WARNING DECAL	
29	N.S.S.	1	SN PLATE	

FIGURE 3-13. 12 FT TRUSS BOOM WITH WINCH (SN 0160037794 to Present)

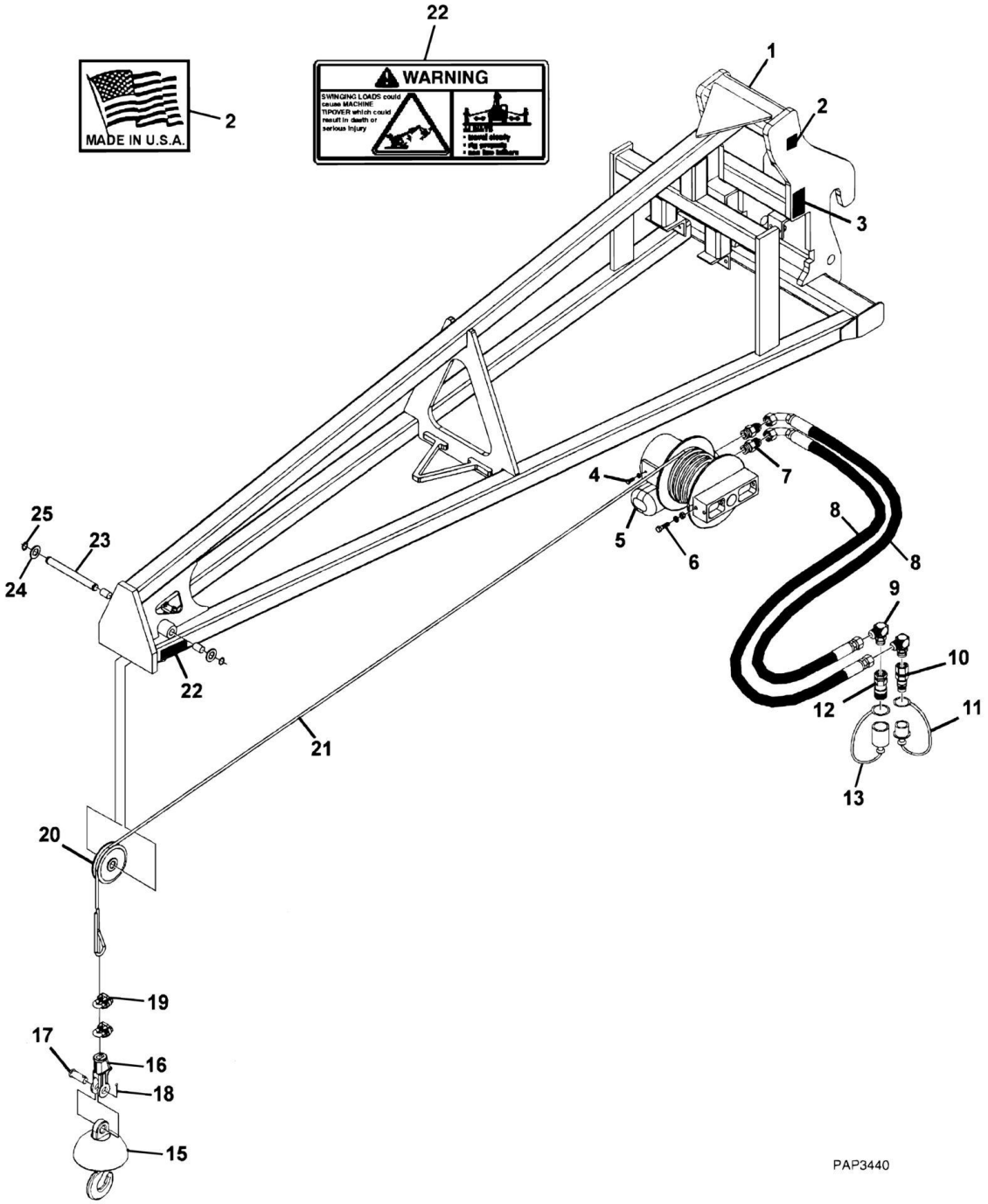

FIGURE 3-13. 12 FT TRUSS BOOM WITH WINCH (SN 0160037794 to Present)

ITEM	PART NUMBER	QTY	DESCRIPTION	REV
	1001099351	1	12 FT TRUSS BOOM WITH WINCH, (includes all items)	F
1	N.S.S.	1	TRUSS BOOM FRAME	
2	90554016	1	MADE IN USA DECAL	
3	N.S.S.	1	SN PLATE	
4	70021349	4	HEX HD CAPSCREW, 3/8X1	
4	90554042	4	LOCK WASHER, 3/8	
5	70021921	1	TRUSS BOOM WINCH MOTOR	
6	N.S.S.	2	HEX HD CAPSCREW, 1/2X1.75	
6	90554020	2	LOCK WASHER, 1/2	
6	90554054	2	HEX NUT, 1/2	
7	70021415	2	CONNECTOR	
8	70021977	2	HOSE ASSY, 3/8X32	
9	N.S.S.	1	ELBOW, 90	
10	7029692	1	MALE QUICK COUPLER	
11	90554062	1	DUST CAP	
12	70021342	1	FEMALE QUICK COUPLER	
13	90554076	1	DUST COVER	
15	70021978	1	BALL SWIVEL WITH SAFETY HOOK	
16	70021979	1	SOCKET ASSY, (includes items 17 & 18)	
17	N.S.S.	1	PIN	
18	N.S.S.	1	COTTER PIN	
19	N.S.S.	2	CLAMP	
20	70021935	1	PULLEY	
21	70022028	1	CABLE	
22	4110422	2	WARNING SWINGING LOADS DECAL	
23	N.S.S.	1	PIN	
24	N.S.S.	1	FLAT WASHER, 1	
25	N.S.S.	2	SNAP RING	

FIGURE 3-14. 10 FT TRUSS BOOM (Prior to SN 0160037794)

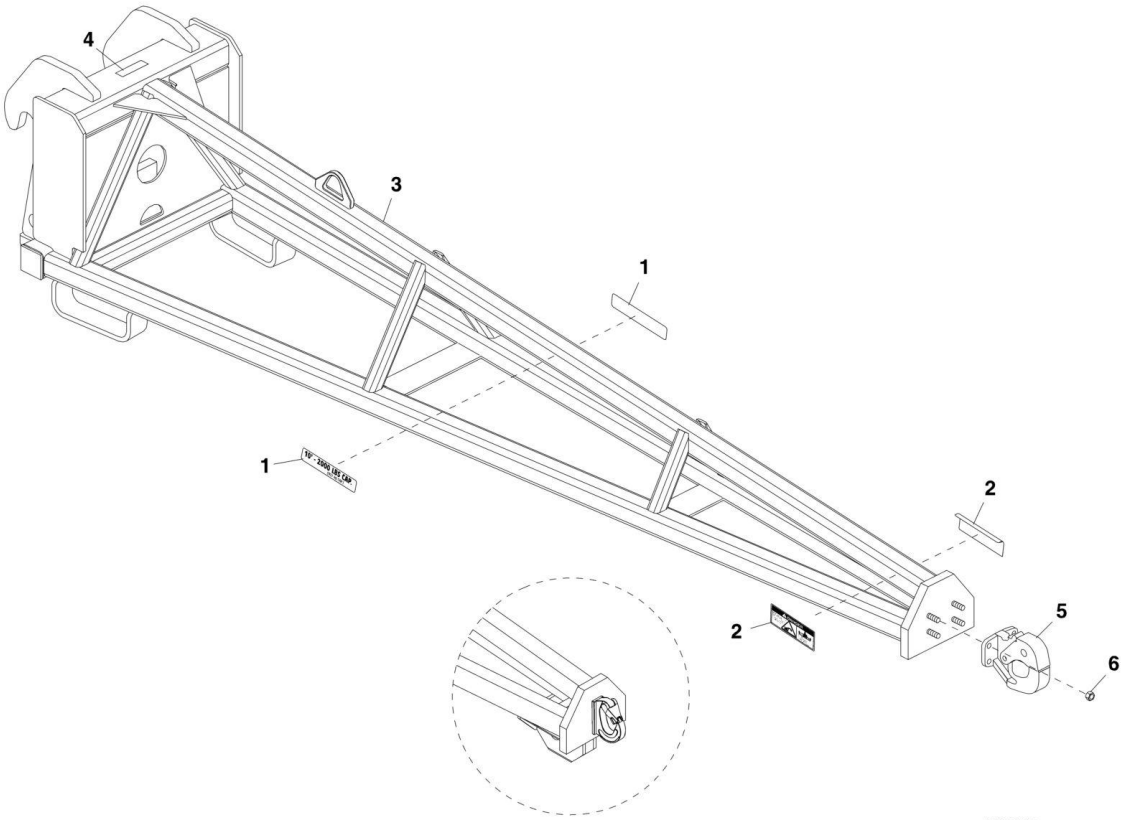

644E - SN 0160032221 TO PRESENT
944E - SN 0160032117 TO PRESENT

FIGURE 3-14. 10 FT TRUSS BOOM (Prior to SN 0160037794)

ITEM	PART NUMBER	QTY	DESCRIPTION	REV
	7301178	NLA	10 FT TRUSS BOOM ASSY, (includes items 1 thru 4), (no longer available, order 1001099359 for replacement or items 1 thru 6 for service)	D
1	4110412	2	CAPACITY DECAL	
2	4110422	2	DANGER DECAL	
3	7301289	1	10 FT TRUSS BOOM	
4	N.S.S.	1	SN PLATE	
5	8382017	1	PINTLE HOOK **(644E Prior to SN 0160032221; 944E Prior to SN 0160032221)**	
6	11419080	10	HEX LOCKNUT, 1/2-20 **(644E Prior to SN 0160032221; 944E Prior to SN 0160032117)**	
6	11419080	6	HEX LOCKNUT, 1/2-20 **(644E SN 0160032221 to Present; 944E SN 0160032117 to Present)**	

FIGURE 3-15. 12 & 15 FT TRUSS BOOM (Prior to SN 0160037794)

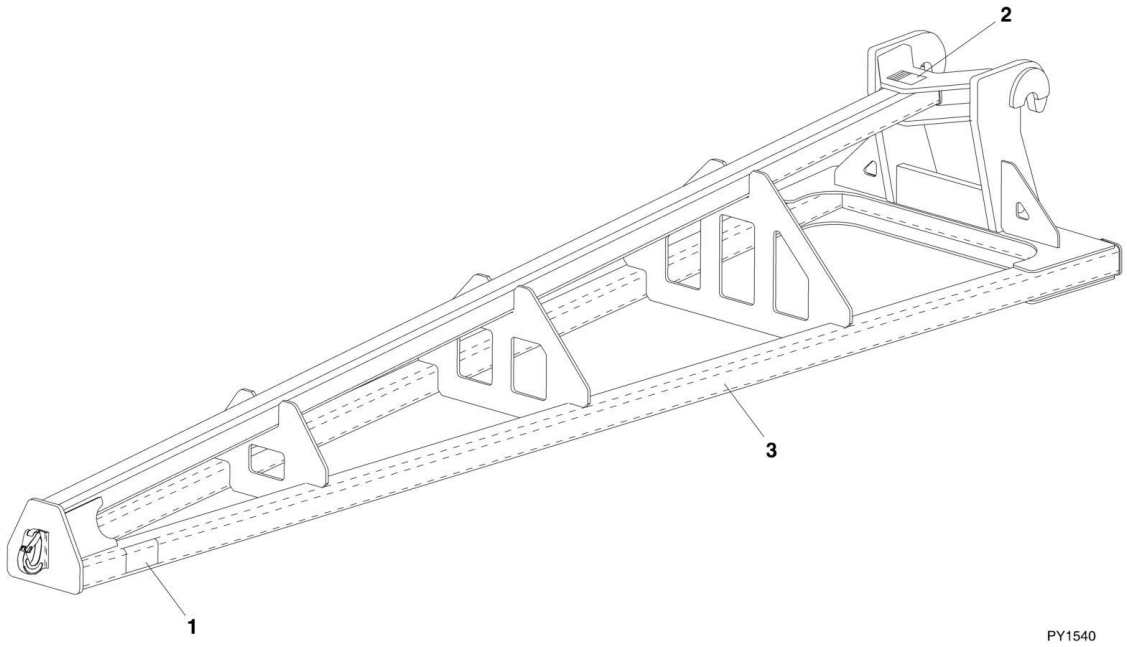

FIGURE 3-15. 12 & 15 FT TRUSS BOOM (Prior to SN 0160037794)

ITEM	PART NUMBER	QTY	DESCRIPTION	REV
	1001099902	1	12 FT TRUSS BOOM, (includes all items)	A
	1001099901	1	15 FT TRUSS BOOM, (includes all items)	A
1	4110422	2	WARNING SWINGING LOADS DECAL	
2	N.S.S.	1	SN PLATE	
3	N.S.S.	1	TRUSS BOOM	

FIGURE 3-16. 50 IN SINGLE FORK POSITIONING CARRIAGE ASSEMBLY

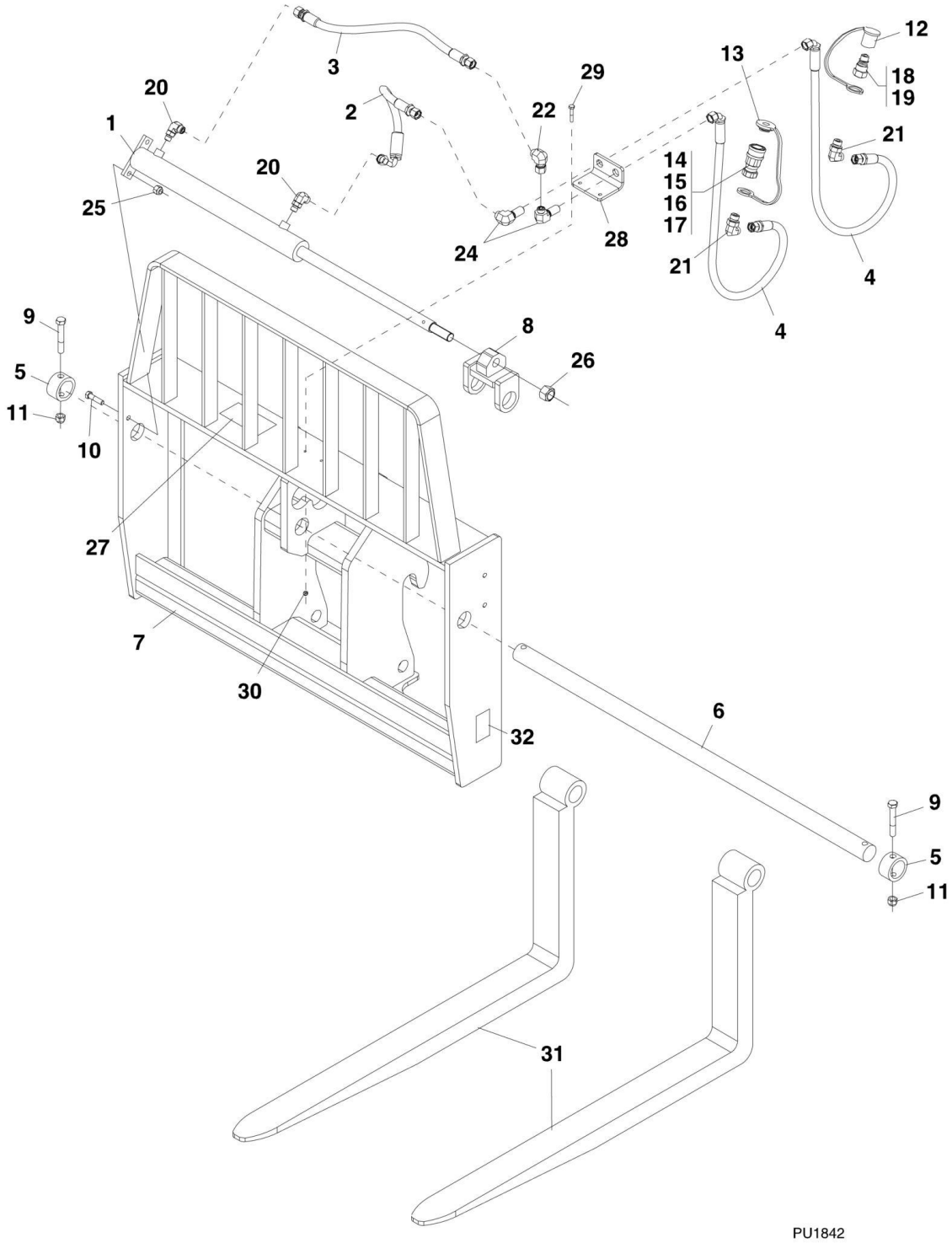

FIGURE 3-16. 50 IN SINGLE FORK POSITIONING CARRIAGE ASSEMBLY

ITEM	PART NUMBER	QTY	DESCRIPTION	REV
	7301294	1	50 IN CARRIAGE FORK POSITIONING, (includes all items)	D
	7301726	1	50 IN CARRIAGE FORK POSITIONING ASSY, (includes items 1 thru 30)	F
1	2717283	1	50 IN CARRIAGE FORK POSITIONING CYLINDER	
1	8036733	1	SEAL KIT	
2	2717160	1	HOSE ASSY	
3	2717161	1	HOSE ASSY	
4	2717162	2	HOSE ASSY	
5	90200003	2	LOCKING HUB	
6	90451058	1	FORK SHAFT	
7	7301569	1	50 IN CARRIAGE WELDMENT	
8	7301579	1	FORK ADAPTER WELDMENT	
9	8303634	2	HEX HD CAPSCREW, 5/8-11X4, GR5	
10	8303658	2	HEX HD CAPSCREW, 1/2-13X2, GR5	
11	8305643	2	HEX NUT, 5/8-11	
12	8420053	1	DUST CAP	
13	8420055	1	DUST PLUG	
14	91403413	1	FEMALE QUICK DISCONNECT, (includes items 15 thru 17)	
15	8640029	1	NOSE SEAL	
16	8640028	1	COUPLER BODY SEAL	
17	8640032	1	COUPLER BODY SEAL BACK UP RING	
18	91403414	1	MALE QUICK DISCONNECT, (includes item 19)	
19	8640029	1	NOSE SEAL	
20	2130606	2	ELBOW, 90	
21	2130608	2	ELBOW, 90	
22	2172106	1	ELBOW, 90, (swivel nut)	
24	2171206	2	ELBOW, 90	
25	8310302	2	HEX LOCKNUT	
26	10705034	1	HEX LOCKNUT	
27	4110473	1	ROUTE HOSE WARNING DECAL	
28	7301578	1	BULKHEAD PLATE	
29	8303743	2	HEX HD CAPSCREW, 1/4-20X1.5, GR5	
30	8305624	2	HEX LOCKNUT, 1/4-20	
31	7301408	2	PALLET FORK, 60X100X1220mm	
32	N.S.S.	1	SN PLATE	

FIGURE 3-17. 50 IN DUAL FORK POSITIONING CARRIAGE ASSEMBLY

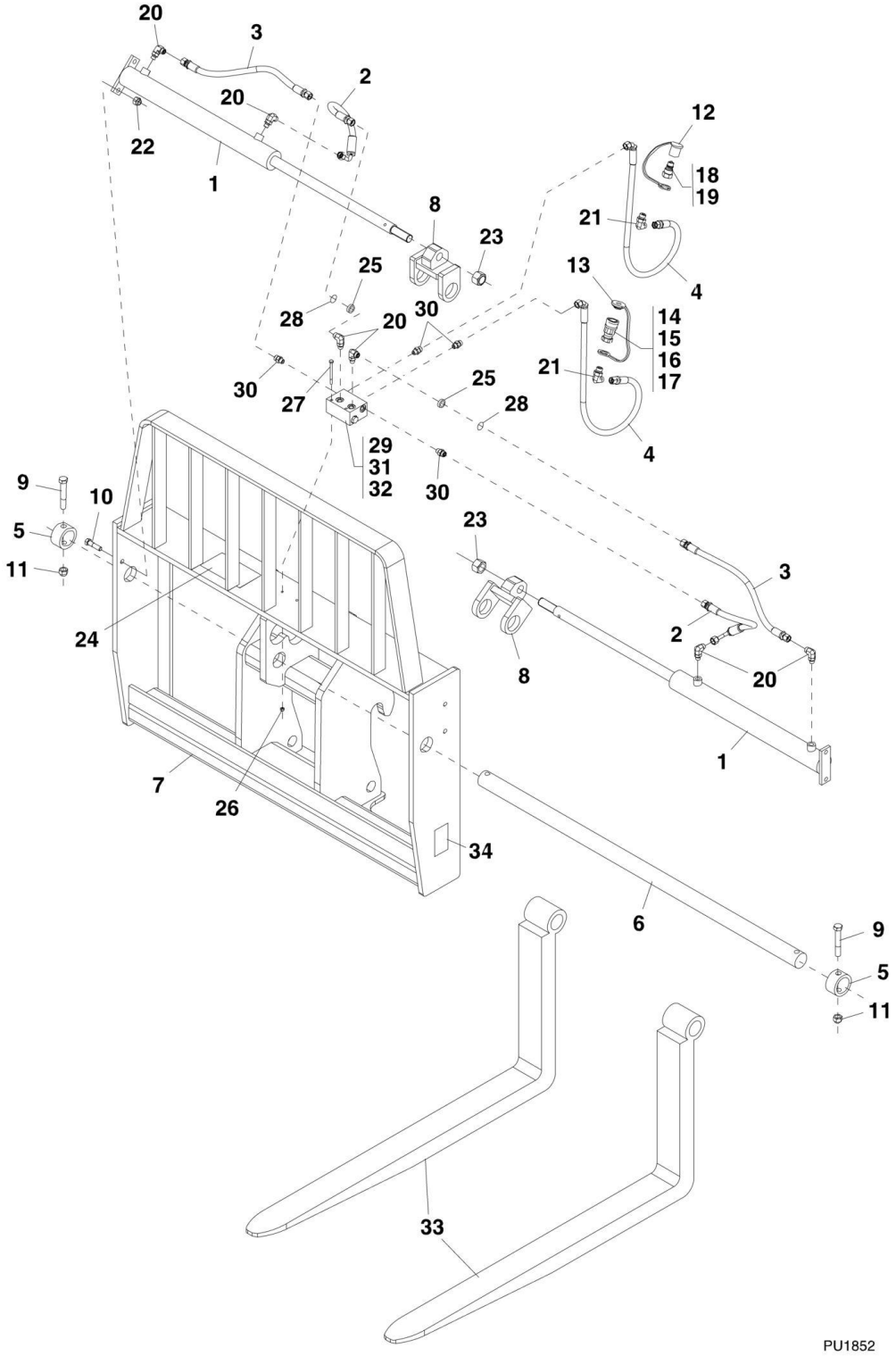

FIGURE 3-17. 50 IN DUAL FORK POSITIONING CARRIAGE ASSEMBLY

ITEM	PART NUMBER	QTY	DESCRIPTION	REV
	7301295	1	50 IN DUAL FORK POSITIONING CARRIAGE ASSY, (includes all items)	D
	7301568	1	50 IN DUAL FORK POSITIONING CARRIAGE ASSY, (includes items 1 thru 32)	H
1	2717283	2	FORK POSITIONING CYLINDER	
1	8036733	1	SEAL KIT	
2	2717160	2	HOSE ASSY	
3	2717161	2	HOSE ASSY	
4	2717162	2	HOSE ASSY	
5	90200003	2	LOCKING HUB	
6	90451058	1	FORK SHAFT	
7	7301569	1	50 IN CARRIAGE WELDMENT	
8	7301579	2	FORK ADAPTER WELDMENT	
9	8303634	2	HEX HD CAPSCREW, 5/8-11X4, GR5	
10	8303658	4	HEX HD CAPSCREW, 1/2-13X2, GR5	
11	8305643	2	HEX LOCKNUT, 5/8-11	
12	8420053	1	DUST CAP	
13	8420055	1	DUST PLUG	
14	91403413	1	FEMALE QUICK DISCONNECT, (includes items 15 thru 17)	
15	8640029	1	NOSE SEAL	
16	8640028	1	COUPLER BODY SEAL	
17	8640032	1	COUPLER BODY SEAL BACK UP RING	
18	91403414	1	MALE QUICK DISCONNECT, (includes item 19)	
19	8640029	1	NOSE SEAL	
20	2130606	4	ELBOW, 90	
21	2130608	2	ELBOW, 90	
22	8310302	4	HEX LOCKNUT, 1/2-13	
23	10705034	2	HEX LOCKNUT	
24	4110473	1	HOSE ROUTE WARNING DECAL	
25	7139918	2	DISC ORIFICE	
26	8305624	2	HEX LOCKNUT, 1/4-20	
27	8310435	2	HEX HD CAPSCREW, 1/4-20X3-1/4, GR5	
28	8630003	2	O-RING	
29	4641502	1	VALVE ASSY, (Includes items 30 thru 32)	
30	2110606	4	ADAPTER	
31	4641501	1	VALVE BODY	
32	2130606	2	CONNECTOR	
33	7301408	2	PALLET FORK, 60X100X1220mm	
34	N.S.S.	1	SN PLATE	

FIGURE 3-18. FORK MOUNTED LIFTING HOOK

NOTE: PALLET/LUMBER FORKS OF AN APPROPRIATE LOAD RATING MUST BE USED.

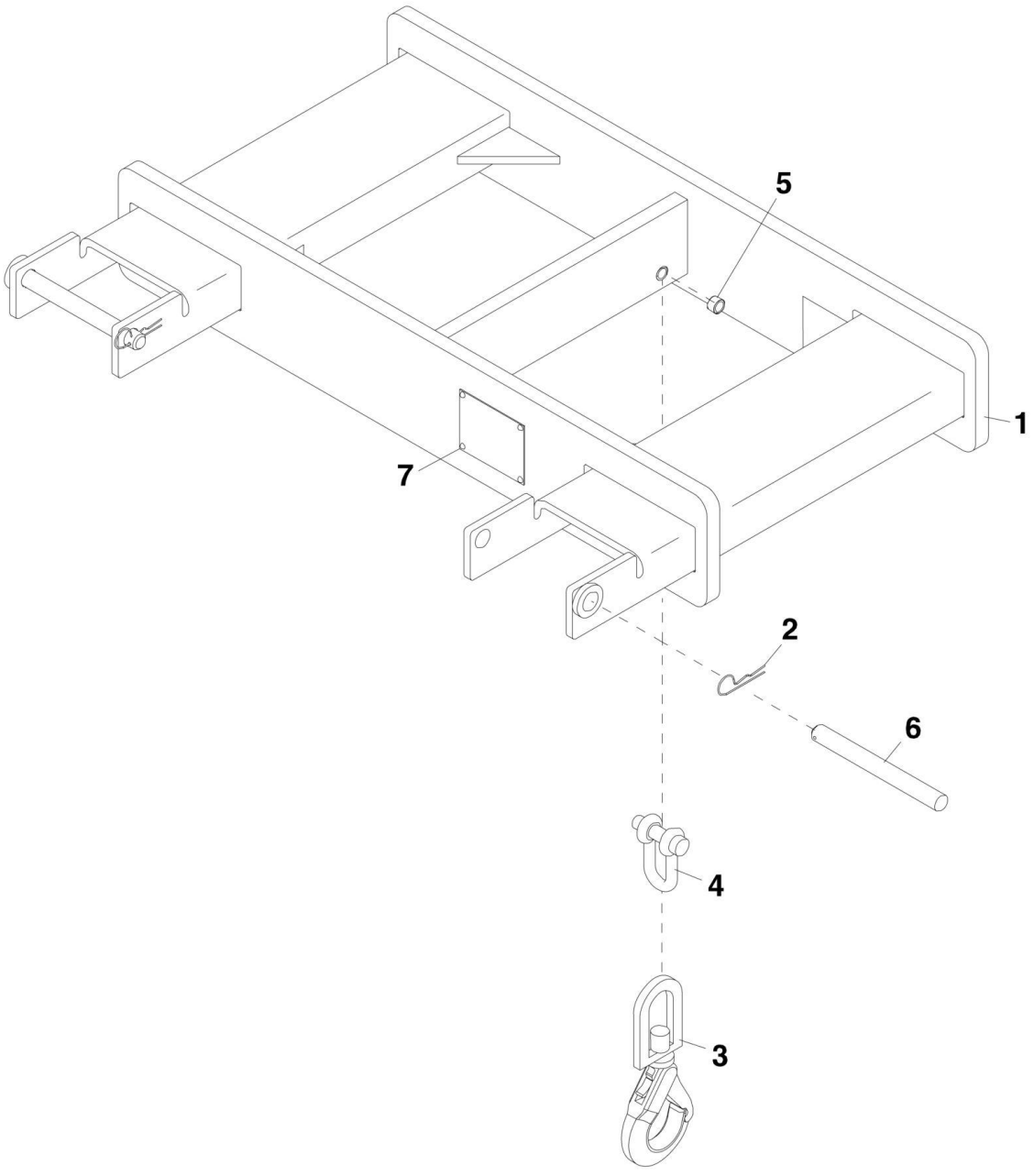

FIGURE 3-18. FORK MOUNTED LIFTING HOOK

ITEM	PART NUMBER	QTY	DESCRIPTION	REV
1	91565094	1	FORK MOUNTED LIFTING HOOK, (includes all items)	F
2	7029520	2	HAIRPIN CLIP	
3	90554080	1	SLING HOOK	
4	7029521	1	CHAIN SHACKLE, 12,000 LB	
5	70020555	1	SPRING BUSHING	
6	1001093171	2	PIN	
7	N.S.S.	1	SN PLATE	

FIGURE 3-19. FORKS

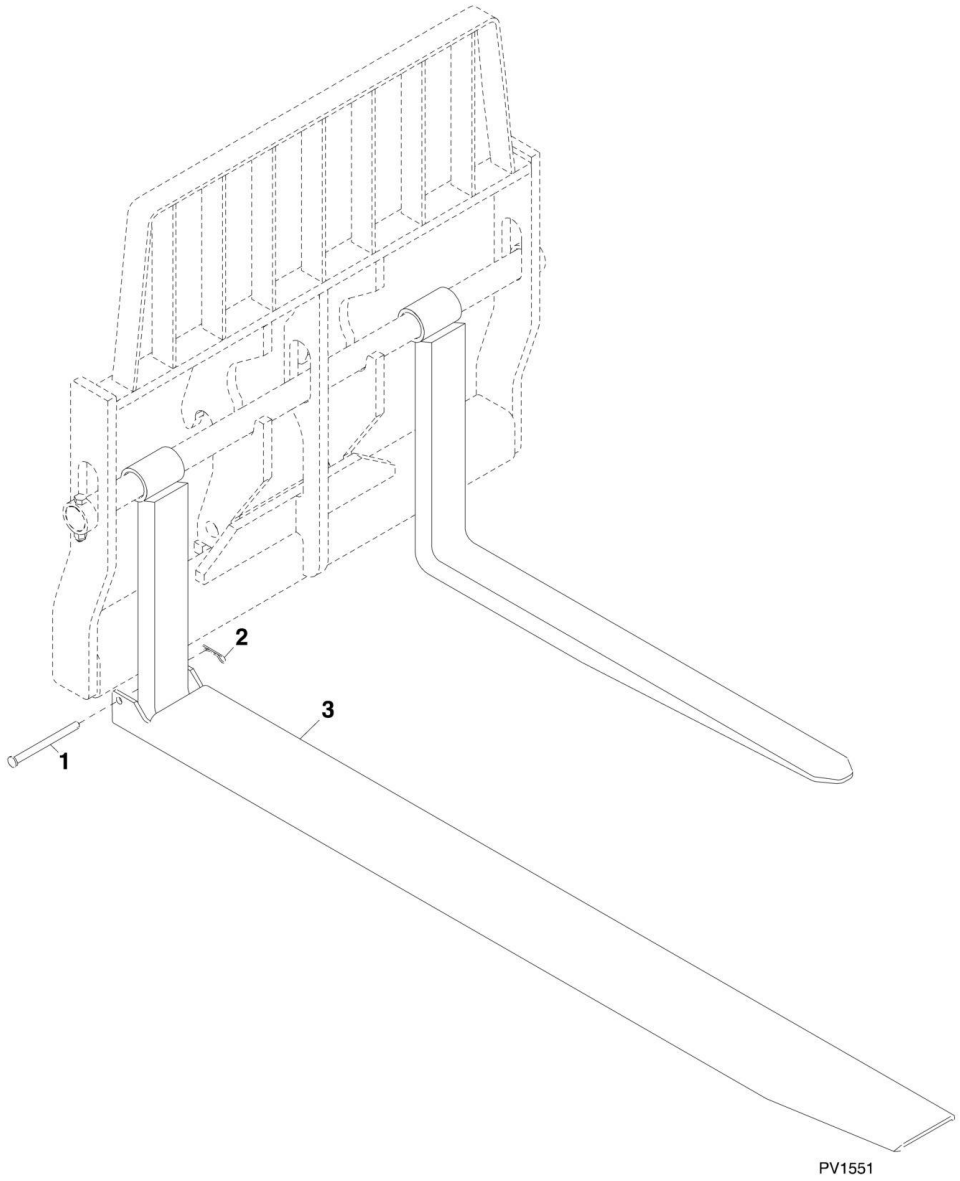

PV1550

FIGURE 3-19. FORKS

ITEM	PART NUMBER	QTY	DESCRIPTION	REV
	7097523	2	PALLET FORK, 48X4X2, (4,000 lb rating each fork)	
	7301408	2	PALLET FORK, 48X4X2.36, (5,000 lb rating each fork)	
	7139746	2	LUMBER FORK, 60X 7X1.75, (5,000 lb rating each fork)	
	7139747	6	CUBING FORK, 48X2X2, (2,000 lb rating each fork)	
	2340037	6	CUBING FORK, 48X2X2, (1,940 lb rating each fork)	
	2340045	2	PALLET FORK, 48X4X2.36, (5,475 lb rating each fork)	
	2340038	2	PALLET FORK, 48X5X2.36, (6,850 lb rating each fork)	
	2340039	2	DUAL TAPER FORK, 60X6X2.36, (8,150 lb rating each fork)	
	2340046	2	DUAL TAPER FORK, 60X7X1.75, (5,400 lb rating each fork)	
	1001092391	2	DUAL TAPER FORK, 72X6X2, (5,650 lb rating each fork)	
	1001137512	2	90 IN FORK EXTENSION, (includes items 1 thru 3)	
1	70024306	1	PIN	
2	70024307	1	CLIP	
3	N.S.S.	1	WELDMENT	
N1	Note	Ref	**FORKS RATED LESS THAN THE ATTACHMENT OR MACHINE'S CAPACITY DECREASES CAPACITY OF THE ATTACHMENT OR MACHINE TO THAT OF THE FORKS. FORKS RATED MORE THAN THE ATTACHMENT OR MACHINE'S CAPACITY DO NOT INCREASE ATTACHMENT OR MACHINE'S CAPACITY.**	
N2	Note	Ref	**PLEASE CONSULT JLG PARTS DEPARTMENT TO DETERMINE THE CORRECT FORKS APPLICABLE TO YOUR SPECIFIC CARRIAGE ASSY AND APPLICATION.**	

FIGURE 3-20. FORK MOUNTED PLATFORM

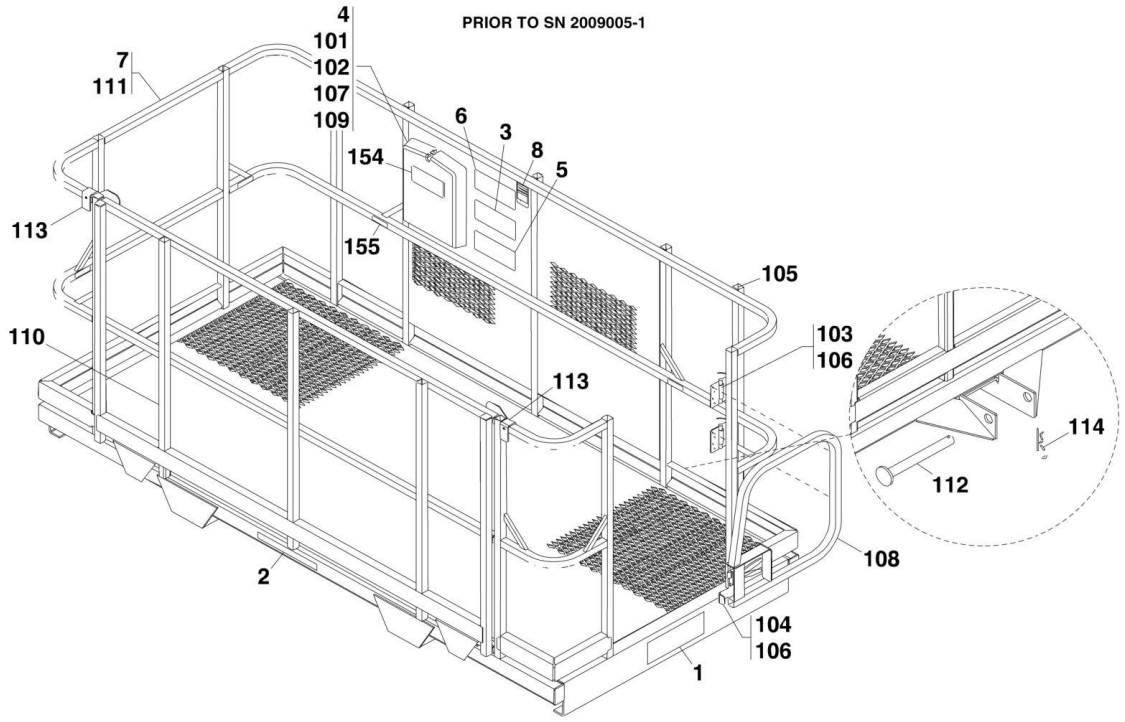

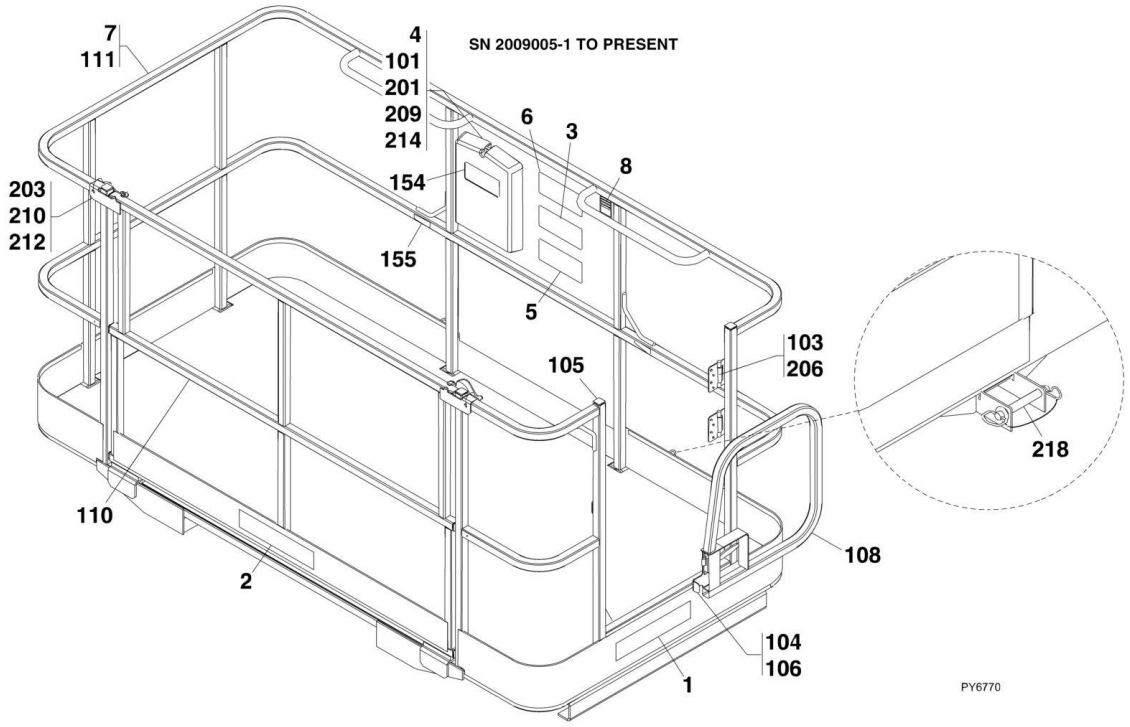

FIGURE 3-20. FORK MOUNTED PLATFORM

ITEM	PART NUMBER	QTY	DESCRIPTION	REV
	1001092280	NLA	FORK MOUNTED PLATFORM-1, (Prior to SN 2009005-1), (ASME), (no longer available, order 1001103637 for replacement or items 1 thru 8 for service)	E
	1001103637	1	FORK MOUNTED PLATFORM, (SN 2009005-1 to Present), (ASME), (includes items 1 thru 8)	D
	1001096306	NLA	FORK MOUNTED PLATFORM-1, (Prior to SN 2009005-1), (ISO), (no longer available, order 1001103730 for replacement or items 1 thru 8 for service)	C
	1001103730	1	FORK MOUNTED PLATFORM, (SN 2009005-1 to Present), (ISO), (includes items 1 thru 8)	D
	1001097072	NLA	FORK MOUNTED PLATFORM-1, (Prior to SN 2009005-1), (ASME - FRENCH), (no longer available, order 1001103736 for replacement or items 1 thru 8 for service)	C
	1001103736	1	FORK MOUNTED PLATFORM, (SN 2009005-1 to Present), (ASME - FRENCH), (includes 1 thru 8)	D
1	1702773	2	JLG DECAL	
2	1704885	1	WEBSITE DECAL	
3	1706892	1	PLATFORM WARNING DECAL, (ASME)	
3	1001096025	1	PLATFORM WARNING DECAL, (ISO)	
3	1001096024	1	PLATFORM WARNING DECAL, (ASME - FRENCH)	
4	31200160	1	OPERATION AND SAFETY MANUAL, (ASME)	
4	31200387	1	OPERATION AND SAFETY MANUAL, (ISO - SPANISH)	
4	31200388	1	OPERATION AND SAFETY MANUAL, (ISO - PORTUGUESE)	
4	31200336	1	OPERATION AND SAFETY MANUAL, (ASME - FRENCH)	
5	1001092481	1	WARNING DECAL, (ASME)	
5	1001096021	1	WARNING DECAL, (ISO)	
5	1001096019	1	WARNING DECAL, (ASME - FRENCH)	
6	1001092482	1	CAPACITY DECAL, (ASME)	
6	1001096023	1	CAPACITY DECAL, (ISO)	
6	1001096020	1	CAPACITY DECAL, (ASME - FRENCH)	
7	N.S.S.	1	FORK MOUNTED PLATFORM, (Prior to SN 2009005-1), (includes items 101 thru 114)	B
7	N.S.S.	1	FORK MOUNTED PLATFORM, (SN 2009005-1 to Present), (includes items 101, 103 thru 106, 108, 110, 111, 154, 155, 201 thru 218)	H
8	N.S.S.	1	SN PLATE	
101	0860520	1	MANUAL STORAGE BOX	
102	2080044	4	RIVNUT FASTENER, 1/4-20	
103	2600281	2	HINGE	
104	2940074	1	LATCH	
105	3520198	21	PLUG-1 (Prior to SN 2009005-1)	
105	3520072	10	PLUG, (SN 2009005-1 to Present)	
106	3820020	20	POP RIVET-1 (Prior to SN 2009005-1)	
106	3820020	4	POP RIVET, (SN 2009005-1 to Present)	
107	4751400	4	WASHER, 1/4	
108	4846452	1	GATE WELDMENT	
109	80263012	4	SCREW WHIZ LOCK, 1/4-20 X 1/2	
110	1001093140	1	GATE WELDMENT-1 (Prior to SN 2009005-1)	
110	1001095810	1	GATE WELDMENT, (SN 2009005-1 to Present)	
111	N.S.S.	1	PLATFORM WELDMENT	
112	1001093171	2	PIN	
113	1001097168	2	SAFETY SNAP PIN WITH LANYARD	

SECTION 3 - ATTACHMENTS

ITEM	PART NUMBER	QTY	DESCRIPTION	REV
114	1001098582	2	LYNCH PIN 3/16 WITH LANYARD	
154	1701509	1	MANUAL DECAL	
155	1704277	8	LANYARD ATTACH DECAL-1 (Prior to SN 2009005-1)	
155	1704277	3	LANYARD ATTACH DECAL, (SN 2009005-1 to Present)	
201	0641405	4	HEX HD CAPSCREW, 1/4-20X5/8	
203	1060379	2	6 IN LANYARD CABLE	
206	2080040	16	FASTENER	
209	3311405	4	HEX NUT, 1/4-20	
210	3421453	2	PIN	
212	3760170	4	RING	
214	4711400	8	WASHER, 1/4	
218	1001102813	2	HITCH PIN	

FIGURE 3-21. CONCRETE BUCKET

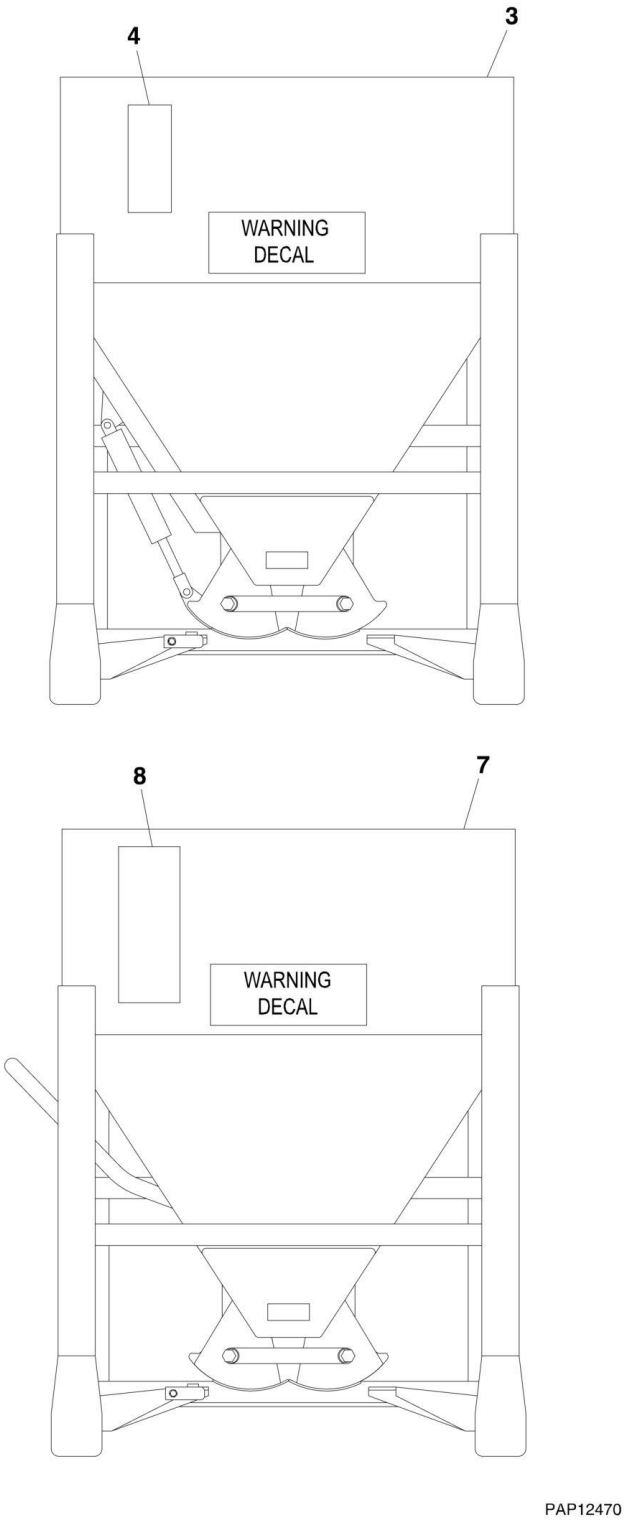

FIGURE 3-21. CONCRETE BUCKET

ITEM	PART NUMBER	QTY	DESCRIPTION	REV
3	8866442	1	CONCRETE BUCKET, 1/2 CU YD, HYDRAULIC, (includes item 4)	B
4	N.S.S.	1	SN PLATE	
7	8866444	1	CONCRETE BUCKET, 1/2 CU YD, MANUAL, (includes item 8)	B
8	N.S.S.	1	SN PLATE	
	8866446	1	4 IN DISCHARGE HOSE, (not shown)	
	8866561	1	4 IN DISCHARGE HOSE WITH GATE, (not shown)	
	8866464	1	6 IN DISCHARGE HOSE, (not shown)	
	8866560	1	8 IN DISCHARGE HOSE, (not shown)	
	8866445	1	RUBBER SIDE DISCHARGE CHUTE, (not shown)	

FIGURE 3-22. SWEEPER ASSEMBLY

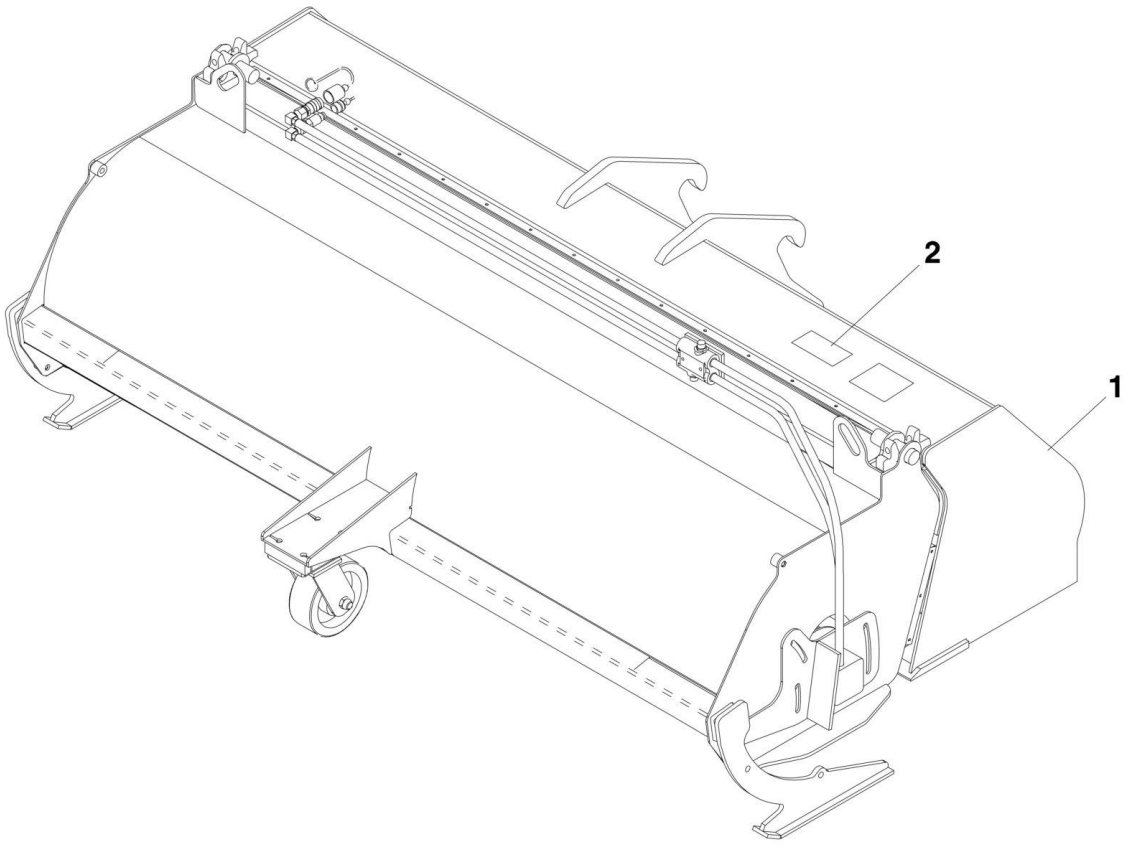

FIGURE 3-22. SWEEPER ASSEMBLY

ITEM	PART NUMBER	QTY	DESCRIPTION	REV
	7301180	1	SWEEPER ASSY, (includes all items)	B
1	7301718	1	24 IN SWEEPER WITH BUCKET	
2	N.S.S.	1	SN PLATE	
4	4110461	1	WARNING DECAL, (Not shown)	

FIGURE 3-23. GRAPPLE BUCKET

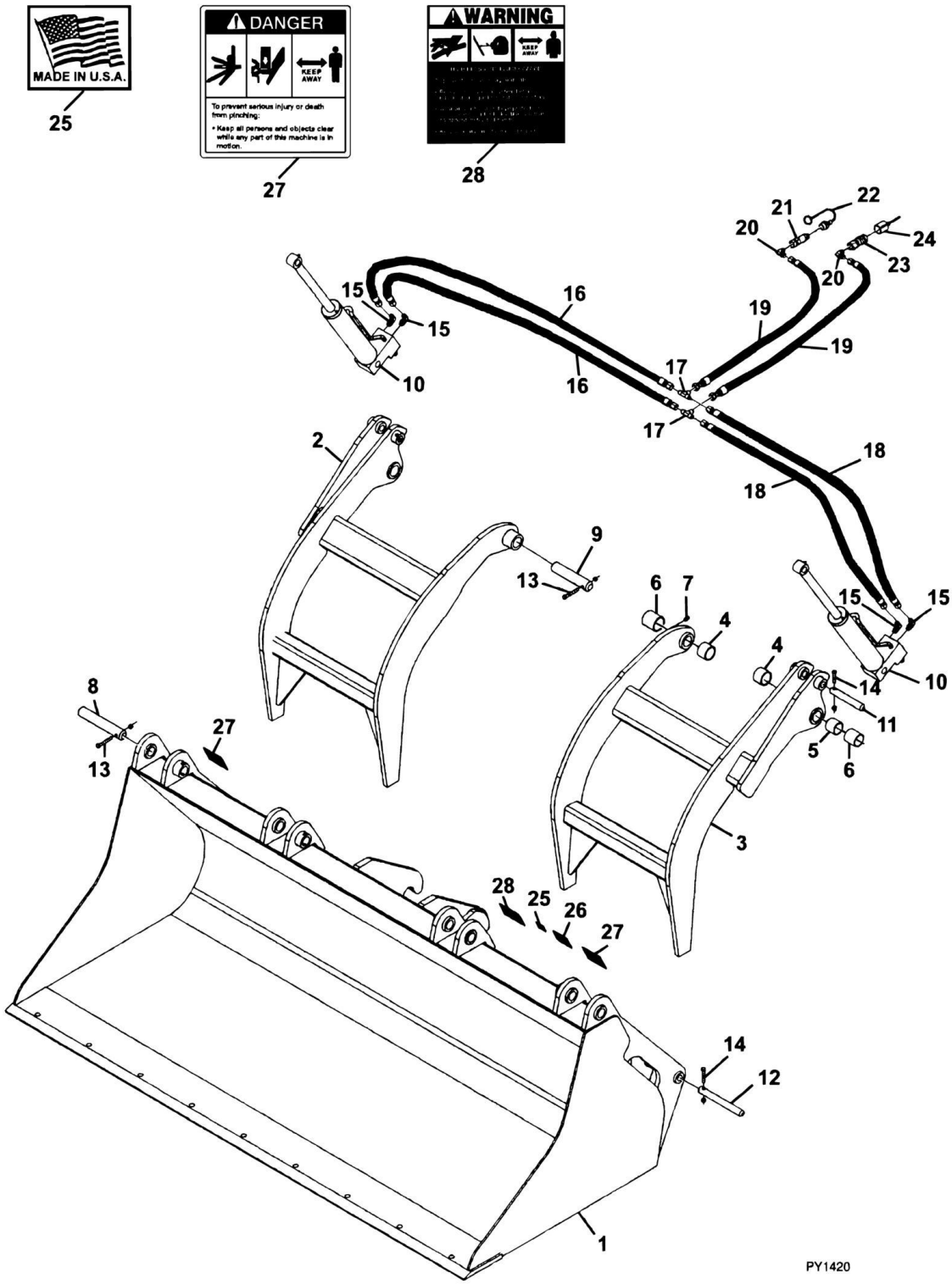

FIGURE 3-23. GRAPPLE BUCKET

ITEM	PART NUMBER	QTY	DESCRIPTION	REV
	0930020	1	GRAPPLE BUCKET, (includes all items)	G
1	N.S.S.	1	BUCKET	
1	70021387	4	HOSE CLAMP	
2	70021391	1	RIGHT GRAPPLE HOOK	
3	70021392	1	LEFT GRAPPLE HOOK	
4	70021358	4	BUSHING	
5	70021359	2	SPACER	
6	70021360	4	BUSHING	
7	7029714	4	GREASE FITTING	
8	70021361	2	OUTER PIVOT PIN	
9	70021362	2	INNER PIVOT PIN	
10		Ref	CYLINDER ASSY, (See HYDRAULIC COMPONENTS SECTION for Breakdown)	
11	70021364	2	PIN	
12	70021365	2	PIN	
13	70021366	4	HEX HD CAPSCREW, 3/8X2.75	
13	70021367	4	LOCK NUT, 3/8	
14	70021399	4	HEX HD CAPSCREW, 3/8X2.25	
14	70021367	4	LOCK NUT, 3/8	
15	90554065	4	ELBOW, 90	
16	70021980	2	HOSE ASSY, 3/8X73 IN	
17	70020562	2	TEE FITTING	
18	70021981	2	HOSE ASSY, 3/8X46 IN	
19	70021982	2	HOSE ASSY, 3/8X34 IN	
20	70022527	2	ELBOW, 90	
21	7029692	1	MALE QUICK COUPLER	
22	90554062	1	DUST COVER	
23	70021342	1	FEMALE QUICK COUPLER	
24	90554076	1	DUST COVER	
25	90554016	1	MADE IN USA DECAL	
26	N.S.S.	1	SN PLATE	
27	90554017	2	DANGER PINCH POINT DECAL	
28	90554018	1	WARNING HIGH PRESSURE DECAL	

FIGURE 3-24. FORK PIN LOCK INSTALLATION

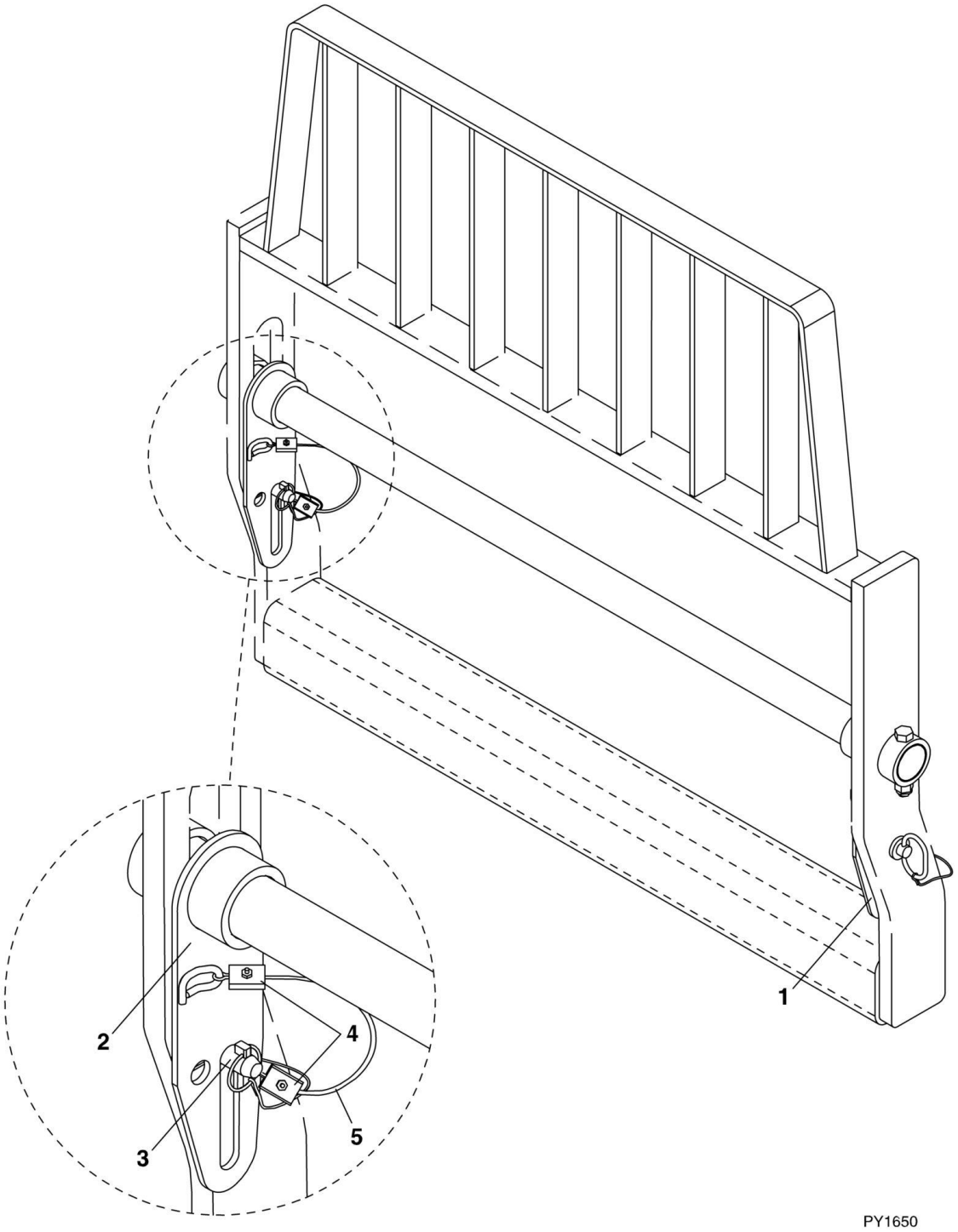

FIGURE 3-24. FORK PIN LOCK INSTALLATION

ITEM	PART NUMBER	QTY	DESCRIPTION	REV
	1001093465	1	FORK PIN LOCK INSTALLATION (includes all items)	B
1	0240156	1	LH FORK PIN LOCK	
2	1001093273	1	RH FORK PIN LOCK	
3	1001093377	2	HITCH PIN	
4	1001094830	4	CLAMP	
5	1001094330	2	LANYARD	

FIGURE 3-25. 8 FT STANDARD MAST

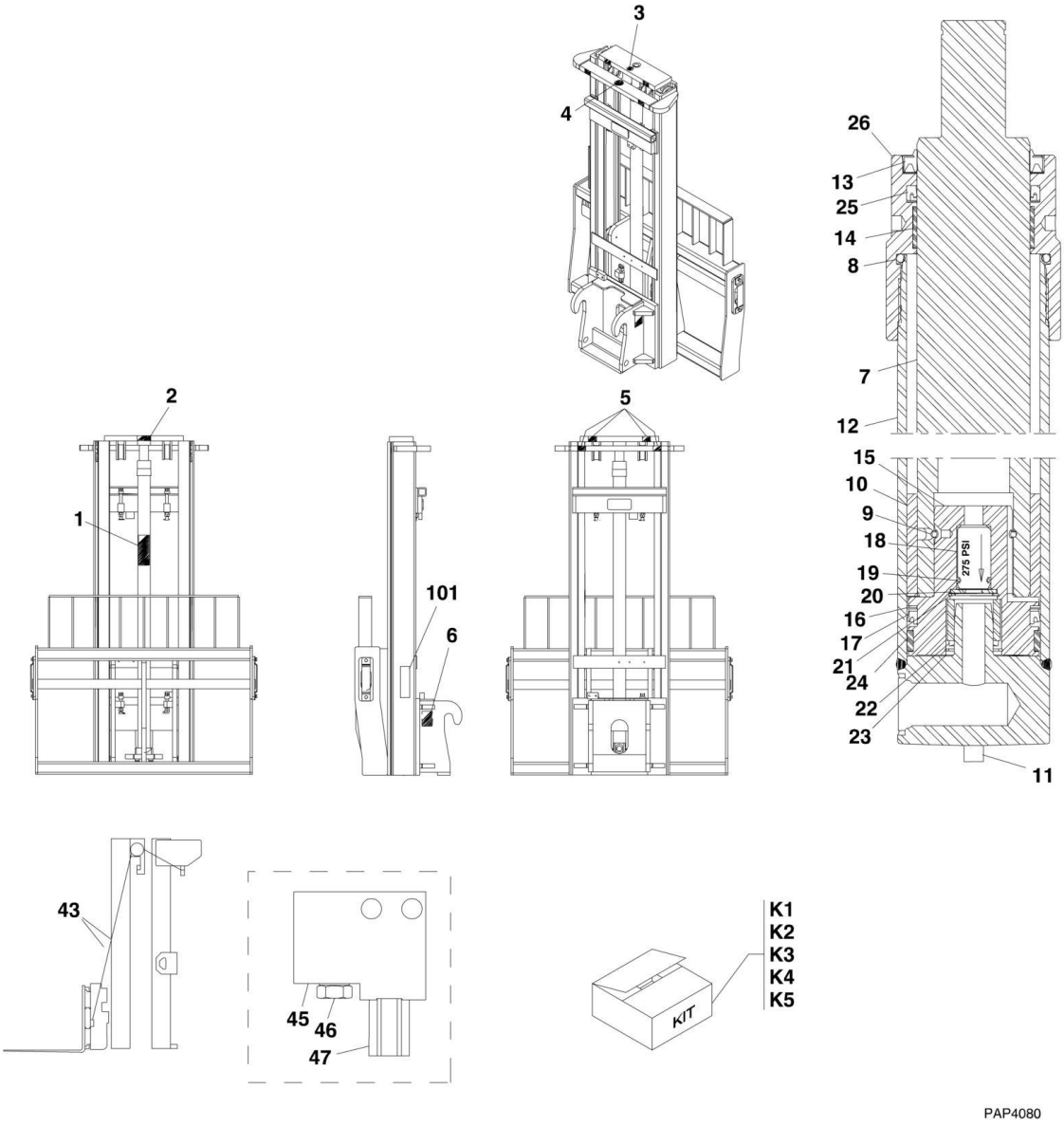

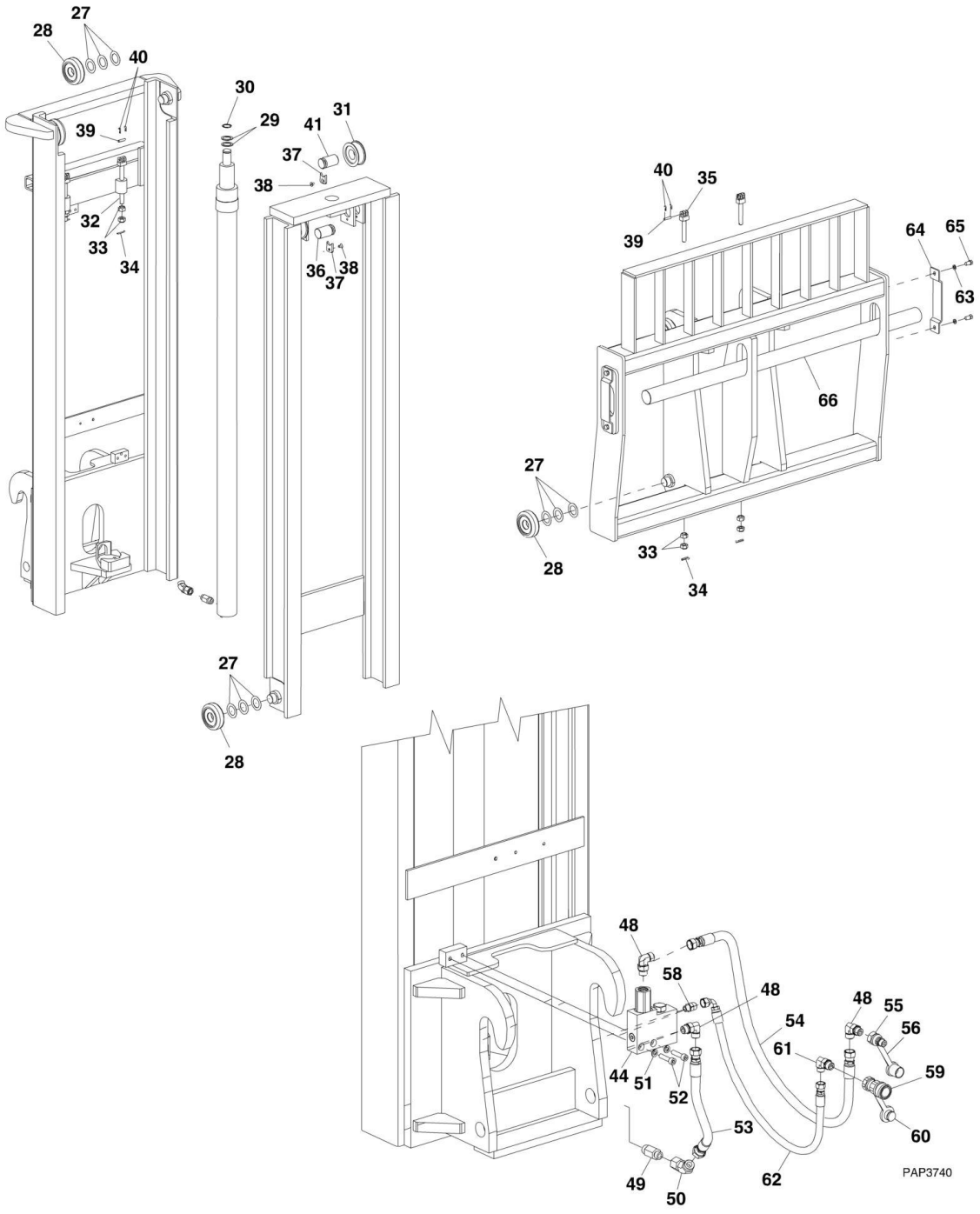
27
28
40
39
30
29
41
31
37
38
32
33
34
36
37
38
27
28
40
35
39
64
65
63
66
27
28
33
34
48
58
48
48
55
54
56
61
59
44
51
52
53
60
49
50
62
PAP3740

FIGURE 3-25. 8 FT STANDARD MAST

ITEM	PART NUMBER	QTY	DESCRIPTION	REV
	1001108668	1	8 FT STANDARD MAST, (includes all items)	B
1	Kit K1	1	WARNING DECAL	
2	Kit K1	1	WARNING DECAL	
3	Kit K1	1	NO STEP DECAL	
4	Kit K1	1	NO STEP DECAL	
5	Kit K1	4	HANDS OFF DECAL	
6	1001111190	2	HOSE ROUTING DECAL	
6	70023008	1	MAIN LIFT CYLINDER, (includes items 7 thru 26)	
7	N.S.S.	1	ROD/PLUNGER	
8	Kit K2	1	O-RING	
9	Kit K2	1	PULL WIRE	
10	N.S.S.	1	SPACER	
11	N.S.S.	2	ROLL PIN	
12	N.S.S.	1	BARREL	
13	Kit K2	1	WIPER	
14	Kit K2	1	BUSHING	
15	N.S.S.	1	PISTON	
16	Kit K2	1	NYLON RING	
17	Kit K2	1	PISTON SEAL	
18	Kit K3	1	CHECK VALVE	
19	Kit K2 or K3	1	O-RING	
20	Kit K3	1	WASHER	
21	Kit K2 or K3	1	CIRCLIP	
22	N.S.S.	1	SLEEVE	
23	Kit K2 or K3	1	RETAINING RING	
24	Kit K2	1	WEAR RING	
25	Kit K2	1	ROD SEAL	
26	70023004	1	RETAINER/GLAND	
27	70023014	24	SHIM	
28	70022987	8	BALL BEARING	
29	Kit K5	2	WASHER SHIM	
30	70023016	1	SNAP RING	
31	70022969	2	SHEAVE ASSY	
32	70022960	2	CHAIN ANCHOR	
33	70022957	8	NUT, 0.625-18UNF	
34	70022993	4	COTTER PIN	
35	70022995	2	CHAIN ANCHOR	
36	70022984	1	SHEAVE SHAFT	
37	70022970	2	RETAINER BAR	
38	70023003	2	FLAT HD CAPSCREW	
39	70022994	4	CHAIN ANCHOR PIN	
40	70022992	8	COTTER PIN	
41	70022985	1	SHEAVE SHAFT	
43	70023009	2	LIFT CHAIN	
44	70022932	1	PO CHECK VALVE ASSY, (includes items 45, 46 & 47)	
45	N.S.S.	1	MANIFOLD	
46	70022931	1	PO CHECK VALVE CARTRIDGE	
47	70023010	1	PO CHECK	
48	70022934	3	FITTING, 90	
49	70022936	1	FLOW LIMITER	

ITEM	PART NUMBER	QTY	DESCRIPTION	REV
50	70022937	1	FITTING, 45	
51	70022949	2	LOCKWASHER, M10	
52	70022950	2	HEX SOCKET CAPSCREW	
53	70022942	1	HOSE ASSY	
54	70022952	1	HOSE ASSY	
55	91403414	1	MALE QUICK DISCONNECT COUPLING	
56	91043126	1	DUST CAP	
58	70022939	1	STRAIGHT FITTING, #6	
59	91403413	1	FEMALE QUICK DISCONNECT COUPLING	
60	91043125	1	DUST PLUG	
61	70022935	1	ELBOW, STRAIGHT THREAD	
62	70022946	1	HOSE ASSY	
63	70022949	4	LOCKWASHER, M10	
64	70022980	2	FORK PIN KEEPER	
65	70022998	4	CAPSCREW, M10X20 LG	
66	70022990	1	FORK PIN	
101	N.S.S.	1	SN PLATE	
K1	70023925	1	DECAL KIT, (includes items 1 thru 6)	
K2	70023005	1	SEAL KIT, MAIN LIFT CYLINDER, (includes items 8, 9, 13, 14, 16, 17, 19, 21, 23, 24 & 25)	
K3	70023006	1	CHECK VALVE KIT, (includes items 18, 19, 20, 21 & 23)	
K4	70023007	1	SHIM KIT	
K5	70023015	1	MAST COMMON PARTS KIT, (includes items 27 thru 43)	

FIGURE 3-26. 50 IN SIDE SHIFT CARRIAGE (644E SN 0160034164 to Present; 944E SN 0160034158 to Present)

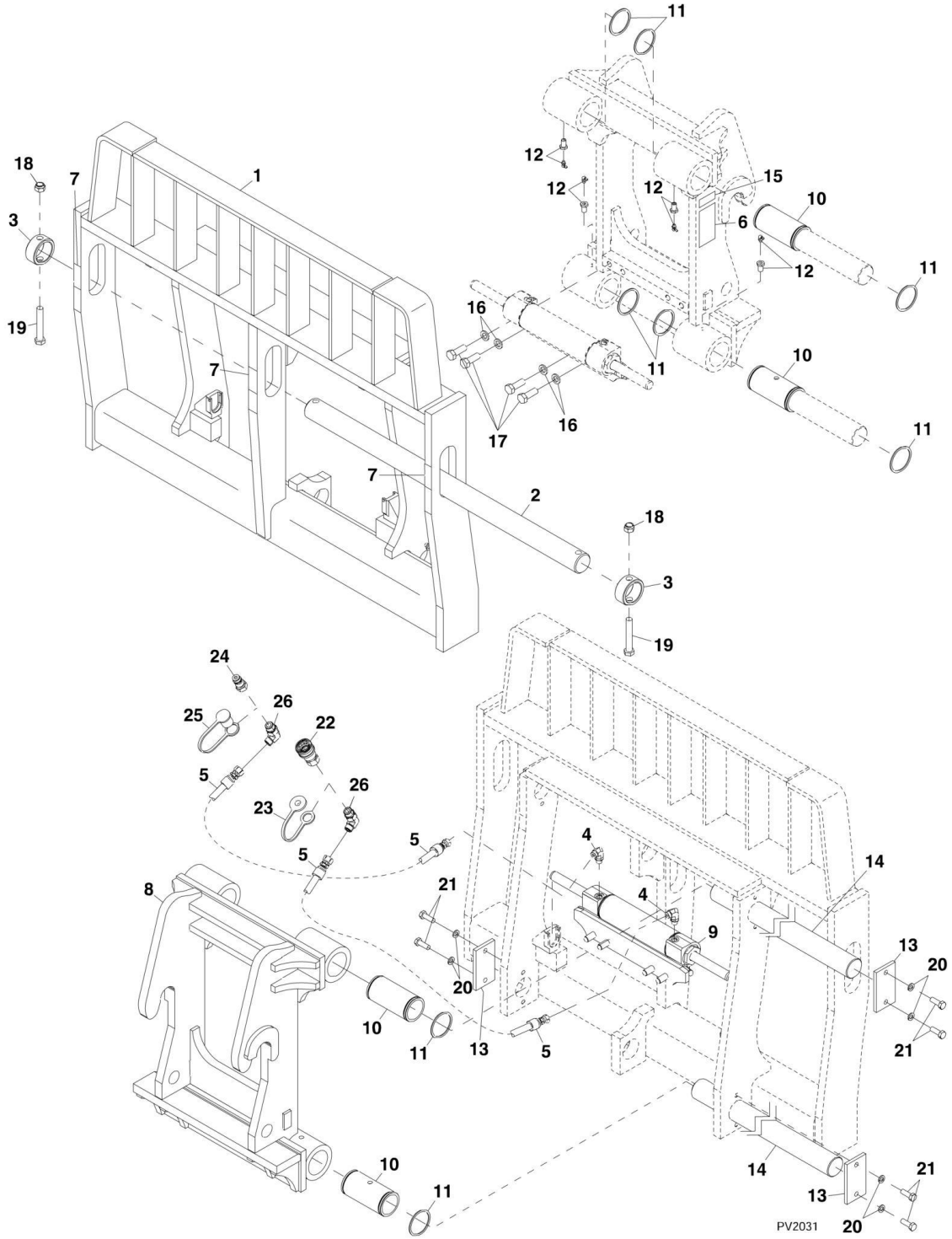

FIGURE 3-26. 50 IN SIDE SHIFT CARRIAGE (644E SN 0160034164 to Present; 944E SN 0160034158 to Present)

ITEM	PART NUMBER	QTY	DESCRIPTION	REV
	1001142790	1	50 IN SIDE SHIFT CARRIAGE, (includes all items)	B
1	N.S.S.	1	WELDMENT	
2	70024535	1	SHAFT	
3	70024536	2	COLLAR	
4	70024123	2	ADAPTER, 90, (includes o-ring)	
5	70024537	2	HOSE ASSEMBLY	
6	N.S.S.	1	SN PLATE	
7	70024538	3	WARNING DECAL	
8	N.S.S.	1	WELDMENT	
9		Ref	50 IN SIDE SHIFT CYLINDER, (See HYDRAULIC COMPONENTS SECTION for Breakdown)	
10	70024540	4	BUSHING	
11	70024541	8	CIRCLIP	
12	70024542	4	GREASE FITTING	
13	70024543	4	RETAINER	
14	70024544	2	SHAFT	
15	N.S.S.	1	SN PLATE	
16	70024551	4	LOCKWASHER, 16mm	
17	70024552	4	HEX HD CAPSCREW, M16X45, GR10.9	
18	70024553	2	HEX NUT, M16, GR8	
19	70024554	2	HEX HD CAPSCREW, M16X100, GR10.9	
20	70022997	8	LOCKWASHER, 12mm	
21	70024555	8	HEX HD CAPSCREW, M12X35, GR10.9	
22	91403413	1	FEMALE QUICK DISCONNECT	
23	8420055	1	DUST PLUG	
24	91403414	1	MALE QUICK DISCONNECT	
25	8420053	1	DUST CAP	
26	70024550	2	ADAPTER, 90, (includes o-ring)	
K1	70024545	1	HYDRAULIC REPAIR KIT, (includes items 5, 22 thru 26)	B
K2	70024546	1	RETAINER KIT, (includes items 13, 20 & 21)	B

SECTION 4 - ENGINE AND ATTACHING PARTS

FIGURE 4-1. ENGINE INSTALLATION (644E Prior to SN 0160048717, Excluding 01600045421; 944E Prior to SN 0160041827, Including 0160041849)

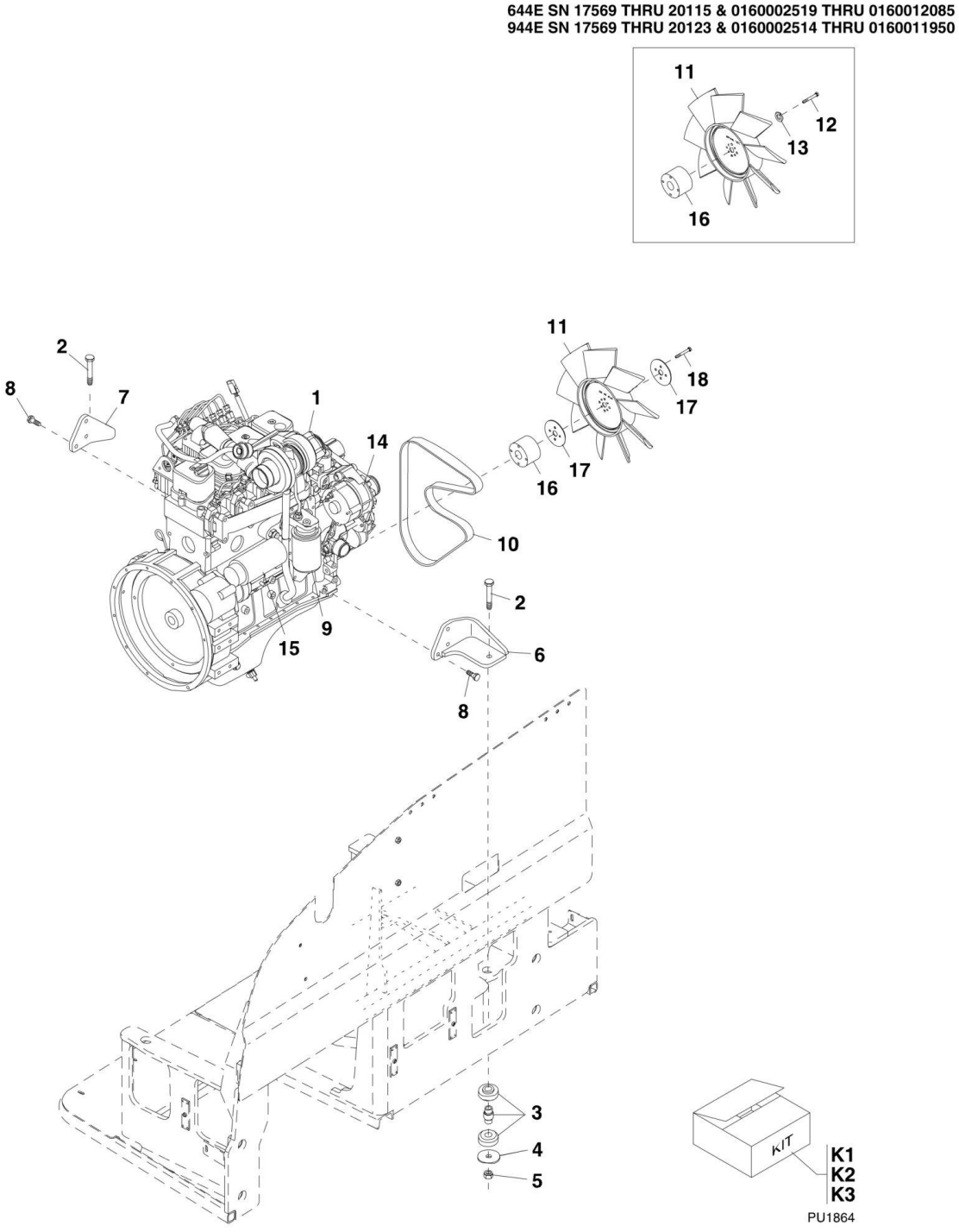

FIGURE 4-1. ENGINE INSTALLATION (644E Prior to SN 0160048717, Excluding 01600045421; 944E Prior to SN 0160041827, Including 0160041849)

ITEM	PART NUMBER	QTY	DESCRIPTION	REV
1	8262161	1	CUMMINS ENGINE ASSEMBLY, 4BT 3.9 EPA, (644E, TIER I,) **(SN 17569 through 20115, SN 0160002519 through 0160003672, Excluding 19557 and 0160003489)**	F
1	8262167	1	CUMMINS ENGINE ASSEMBLY, B4.5T EPA, (644E, TIER II) **(SN 0160003690 through 0160043356, Including 0160003489, 19557 and 20118)**	J
1	8262162	1	CUMMINS ENGINE ASSEMBLY, QSB4.5T EPA, (944E, TIER II)	L
1	70020367	1	12V RELAY	
1	7029829	1	ENGINE HEATER CABLE	
1	7029830	1	ENGINE HEATER	
1	7029831	1	TEMPERATURE SENDER	
1	7029991	1	TRANSFER FUEL PUMP	
1	1321797	1	TRANSFER FUEL PUMP GASKET	
1	70023795	1	FUEL INJECTION PUMP, (644E, TIER I AND II)	
1	70023790	1	FUEL INJECTION PUMP, (944E, TIER II)	
2	8310288	4	HEX HD CAPSCREW, 5/8-11X3-3/4, GR8	
3	8278040	4	ENGINE ISOLATOR	
4	7300435	4	REBOUND WASHER	
5	8305643	4	HEX LOCKNUT, 3/4-11	
6	7300447	1	ENGINE MOUNTING INSIDE REAR BRACKET	
7	7300446	1	ENGINE MOUNTING OUTSIDE REAR BRACKET	
8	8303790	6	HEX HD CAPSCREW, M12-X30, GR8.8	
9	8320275	1	ENGINE OIL FILTER	
10	8036605	1	FAN BELT	
11	8272031	1	21 IN FAN, (must be used with item 16)	
12	8310705	NLA	HEX HD CAPSCREW, M10X75, GR8.8, (no longer available, use items 17 & 18 for replacement) **(644E SN 17569 through 20115, SN 0160002519 through 016001208; 944E SN 517569 through 20123, SN 0160002514 through 0160011950)**	
13	8307022	NLA	LOCKWASHER, 8mm, (no longer available, use items 17 & 18 for replacement) **(644E SN 17569 through 20115, SN 0160002519 through 0160012085; 944E SN 17569 through 20123, SN 0160002514 through 0160011950)**	
14	8270224	NLA	ALTERNATOR, (no longer available, order Alternator Service Kit 2915170 and Alternator 7029525 for replacement, 944E machines require additional Cable ASSEMBLY 7310012) **(644E SN 17569 through 20115, SN 0160002519 through 0160014863; 944E SN 17569 through 20123, SN 0160002514 through 0160041823)**	
14	2915170	1	ALTERNATOR SERVICE KIT	
14	7310012	1	CABLE ASSEMBLY, (944E)	
14	7029525	1	ALTERNATOR, (internal fan), (torque both positive and negative alternator terminal nuts to 15 Nm) **(644E SN 0160014889 through 0160043356; 944E SN 0160014891 through 0160041823)**	
15	7026666	1	STARTER	
16	7028783	1	2IN FAN SPACER, (must be used with item 11)	
17	3575947	2	FAN HUB PLATE **(644E SN 0160012140 through 0160043356; 944E SN 0160011951 through 0160041823)**	
18	8310354	4	HEX HD CAPSCREW, M10X80, GR8.8, (torque to 34-61 Nm) **(644E SN 0160012140 through 0160043356; 944E SN 0160011951 through 0160041823)**	
K1	8024038	1	250 HOUR FILTER KIT, (644E, TIER I), (includes 5 filters: engine oil, primary fuel, inline fuel, primary air filter and safety air filter)	
K1	2915034	1	250 HOUR FILTER KIT, (644E, TIER II), (includes 5 filters: engine	

ITEM	PART NUMBER	QTY	DESCRIPTION	REV
			oil, primary fuel, inline fuel, primary air filter and safety air filter)	
K1	8024049	1	250 HOUR FILTER KIT, (944E), (includes 5 filters: engine oil, primary fuel, inline fuel, primary air filter and safety air filter)	
K2	8024037	1	1000 HOUR FILTER KIT, (644E, Tier I), (includes 8 filters: engine oil, primary fuel, inline fuel, primary air filter, safety air filter, transmission oil, hydraulic oil and filler cap)	
K2	2915035	1	1000 HOUR FILTER KIT, (644E, TIER II), (includes 8 filters: engine oil, primary fuel, inline fuel, primary air filter, safety air filter, transmission oil, hydraulic oil and filler cap)	
K3	8024044	1	1000 HOUR FILTER KIT, (944E), (includes 8 filters: engine oil, primary fuel, inline fuel, primary air filter, safety air filter, transmission oil, hydraulic oil and filler cap)	

FIGURE 4-2. ENGINE INSTALLATION (644E SN 0160048717 to Present, Including 0160045421; 944E SN 0160041827 to Present)

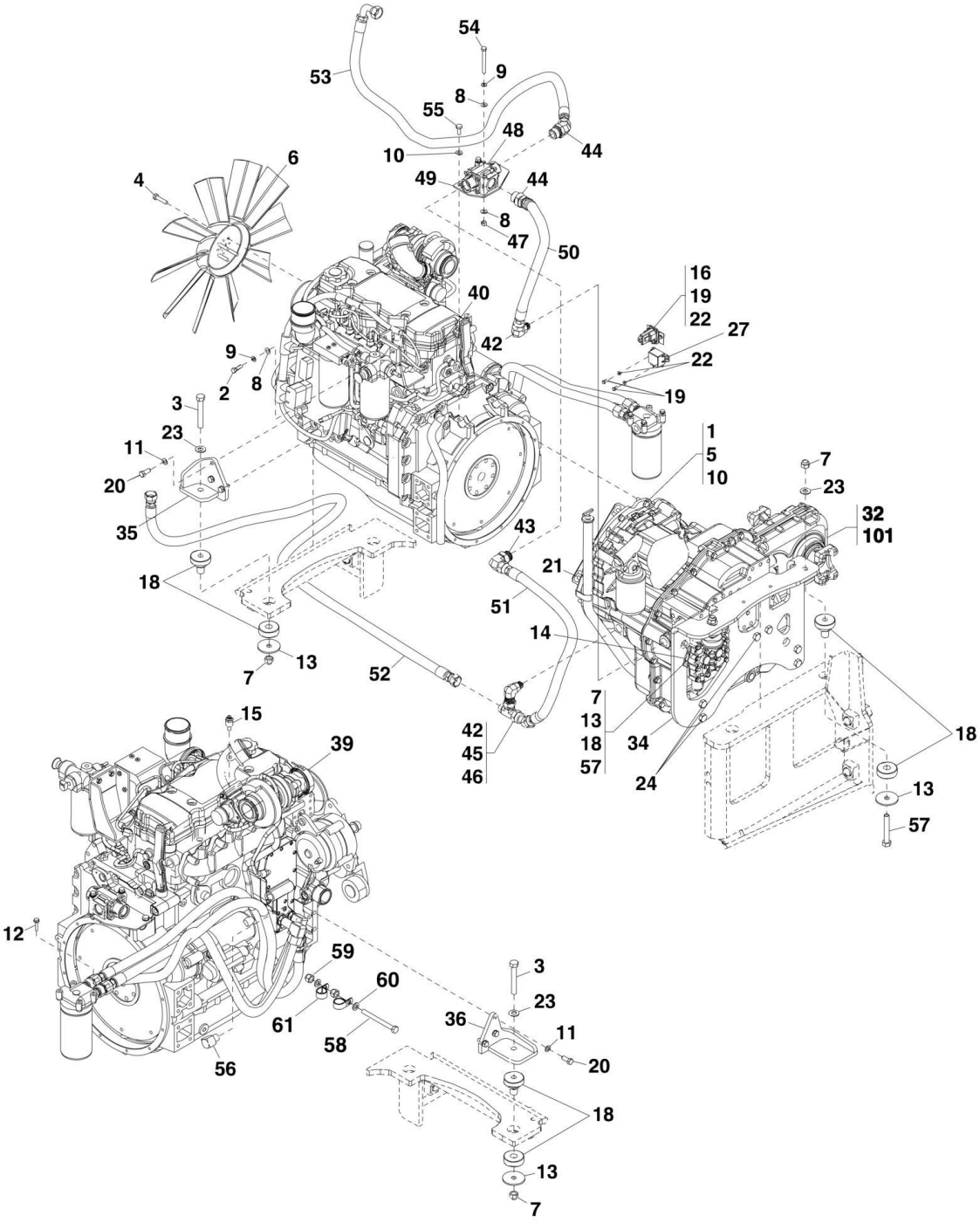

FIGURE 4-2. ENGINE INSTALLATION (644E SN 0160048717 to Present, Including 0160045421; 944E SN 0160041827 to Present)

ITEM	PART NUMBER	QTY	DESCRIPTION	REV
	1001112302	Ref	ENGINE INSTALLATION, (not available to order, see items 1 thru 61 for service)	I
1	0100011	AR	LOCTITE 242	
2	0641610	2	HEX HD CAPSCREW, 3/8-16X1-1/4, GR5, (torque to 35 lb-ft/48 Nm)	
3	0682034	2	HEX HD CAPSCREW, 5/8-11X4-1/4, GR8, (torque to 165 lb-ft/224 Nm)	
4	0701017	4	HEX HD CAPSCREW, M10X45, GR8.8, (torque to 25-45 lb-ft)	
5	0711015	12	HEX HD CAPSCREW, M10X35, GR10.9, (torque to 63 lb-ft/85 Nm)	
6	1001122234	1	23IN FAN	
7	8305643	4	HEX LOCKNUT, 5/8-11, (torque to 106-191 lb-ft/148-259 Nm)	
8	4711600	6	WASHER, 3/8	
9	4761600	4	LOCKWASHER, 3/8	
10	4812000	14	WASHER, 10mm	
11	4832100	7	LOCKWASHER, 12mm	
12	5200810	4	RIPP BOLT, M8X20	
13	7300435	4	WASHER	
14		Ref	TRANSMISSION TEMPERATURE SWITCH, (See ELECTRICAL SECTION for Breakdown)	
15	8223246	1	WATER TEMPERATURE SENDER	
16		Ref	100 AMP RELAY, (See ELECTRICAL SECTION for Breakdown)	
18	1001121309	4	MOUNT	
19		Ref	HEX HD CAPSCREW, M6X14, GR8.8, (See ELECTRICAL SECTION for Breakdown)	
20	8303790	6	HEX HD CAPSCREW, M12X30, GR8.8, (torque to 44-78 lb-ft)	
21		Ref	HEX HD CAPSCREW, M10X25, GR8.8, (See DRIVE TRAIN SECTION for Breakdown)	
22		Ref	WASHER, 6mm, (See ELECTRICAL SECTION for Breakdown)	
23	4712000	4	WASHER, 5/8	
24	8310379	6	HEX HD CAPSCREW, M16X45, GR10.9, (torque to 106-191 lb-ft/148-259 Nm)	
25		Ref	GEAR CLAMP, (not shown), (See FUEL SYSTEM for Breakdown)	
26		Ref	GEAR CLAMP, (not shown), (See FUEL SYSTEM for Breakdown)	
27		Ref	STARTER RELAY, (See ELECTRICAL SECTION for Breakdown)	
28		Ref	COUPLING, (not shown), (See FUEL SYSTEM for Breakdown)	
29		Ref	COUPLING. (not shown), (See FUEL SYSTEM for Breakdown)	
30		Ref	SEALING WASHER, (not shown), (See FUEL SYSTEM for Breakdown)	
32		Ref	ZF TRANSMISSION, (See DRIVE TRAIN SECTION for Breakdown)	
34	1001112241	1	TRANSMISSION MOUNTING PLATE	
35	1001112303	1	ENGINE MOUNT, (outside)	
36	1001112306	1	ENGINE MOUNT, (inside)	
37		Ref	HOSE, (not shown), (See FUEL SYSTEM for Breakdown)	
38		Ref	HOSE, (not shown), (See FUEL SYSTEM for Breakdown)	
39		Ref	ENGINE ASSEMBLY, (See ENGINE for Breakdown)	
40	1001119339	1	BRACKET	
42		Ref	ADAPTER, 90, (See HYDRAULIC CIRCUITS SECTION for Breakdown)	
43		Ref	ADAPTER, 90, (See HYDRAULIC CIRCUITS SECTION for	

ITEM	PART NUMBER	QTY	DESCRIPTION	REV
			Breakdown)	
44		Ref	ADAPTER, 45, (See HYDRAULIC CIRCUITS SECTION for Breakdown)	
45		Ref	ADAPTER, (includes o-ring), (See HYDRAULIC CIRCUITS SECTION for Breakdown)	
46		Ref	SWIVEL NUT ADAPTER, 45	
47	3271601	2	HEX NUT, 3/8-16, GR8	
48		Ref	THERMAL BYPASS VALVE, (See HYDRAULIC CIRCUITS SECTION for Breakdown)	
49	1001120839	1	PLATE	
50		Ref	HOSE ASSEMBLY, (See HYDRAULIC CIRCUITS SECTION for Breakdown)	
51		Ref	HOSE ASSEMBLY, (See HYDRAULIC CIRCUITS SECTION for Breakdown)	
52		Ref	HOSE ASSEMBLY, (See HYDRAULIC CIRCUITS SECTION for Breakdown)	
53		Ref	HOSE ASSEMBLY, (See HYDRAULIC CIRCUITS SECTION for Breakdown)	
54	0641628	2	HEX HD CAPSCREW, 3/8-16X3-1/2, GR5	
55	0761012	2	HEX HD CAPSCREW, M10X25, GR8.8	
56	1001117214	1	ADAPTER, 90	
57	0682032	2	HEX HD CAPSCREW, 5/8-11X4, GR8	
58	0761230	1	HEX HD CAPSCREW, M12x130, GR8.8	
59	8305044	2	HEXNUT	
60	8307220	2	WASHER, 12mm	
61	80673023	2	CLAMP	
101		Ref	GEAR PUMP, (See HYDRAULIC COMPONENTS SECTION for Breakdown)	

FIGURE 4-3. ENGINE (SN 0160041827 through 0160044164)

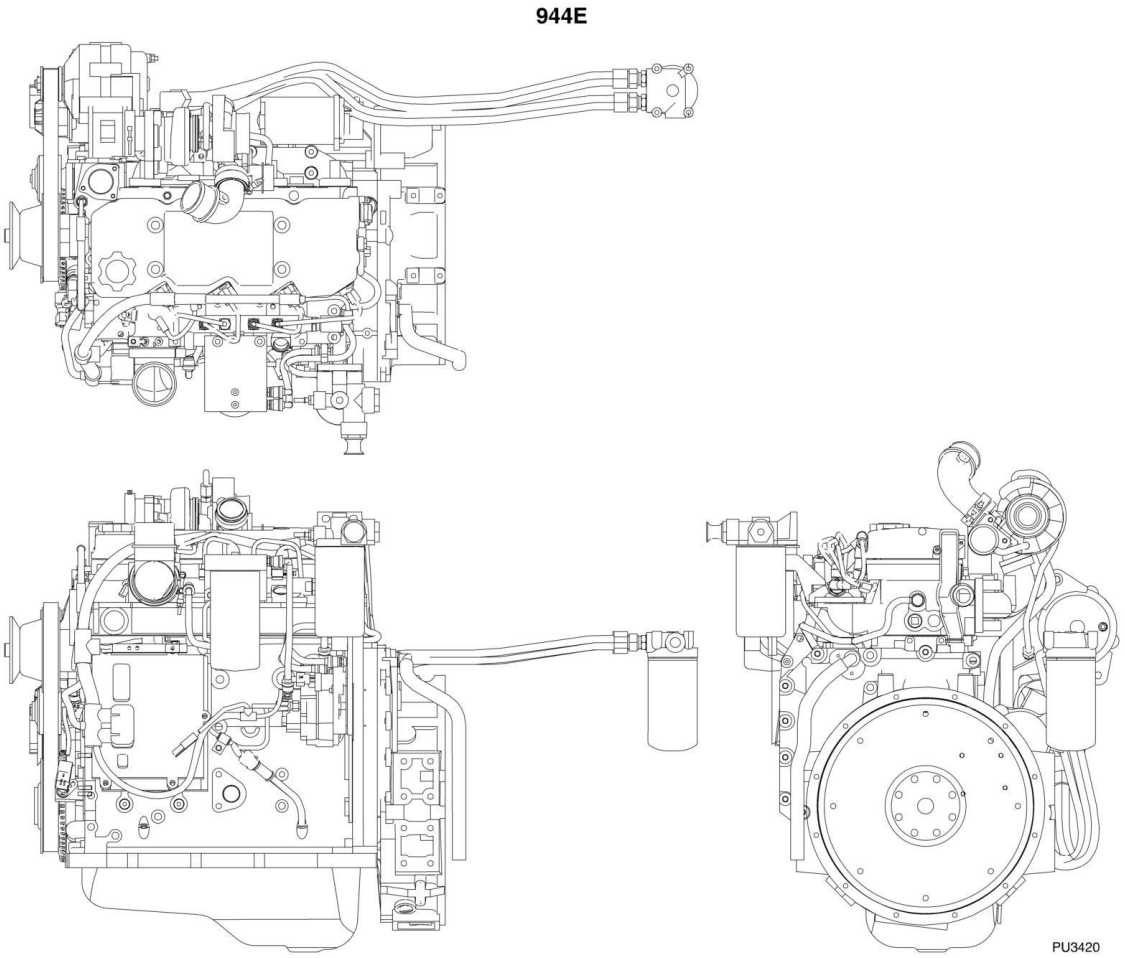

FIGURE 4-3. ENGINE (SN 0160041827 through 0160044164)

ITEM	PART NUMBER	QTY	DESCRIPTION	REV
	1001114945	1	ENGINE, 110 HP, TIER III, (includes all items)	C
	70023444	1	BLOCK HEATER	
	70023287	1	ALTERNATOR	
		Ref	ALTERNATOR MOUNTING	
	1321814	1	HEX HD CAPSCREW, 1/2-13X1	
	1321918	4	HEX HD CAPSCREW, M8X35	
	1321951	1	HEX HD CAPSCREW, M10X25	
	1321955	1	HEX HD CAPSCREW, M12X150	
	80384398	1	HEX NUT, M12X1.75	
	70023288	1	BRACKET	
	70023289	1	SUPPORT BRACKET	
	70022634	1	FLYWHEEL WITH RING GEAR	
	70020350	1	DIPSTICK	
	70020351	1	DIPSTICK TUBE	
	70020352	1	STARTER	
	70020358	1	OIL FILTER	
	70023932	1	ENGINE OIL PRESSURE SWITCH	
	70023933	1	ENGINE OIL PRESSURE SWITCH O-RING	
	70020349	1	PRIMARY FUEL FILTER	
	70020348	1	SECONDARY FUEL FILTER	

FIGURE 4-4. ENGINE (SN 0160044254 through 0160049550)

944E

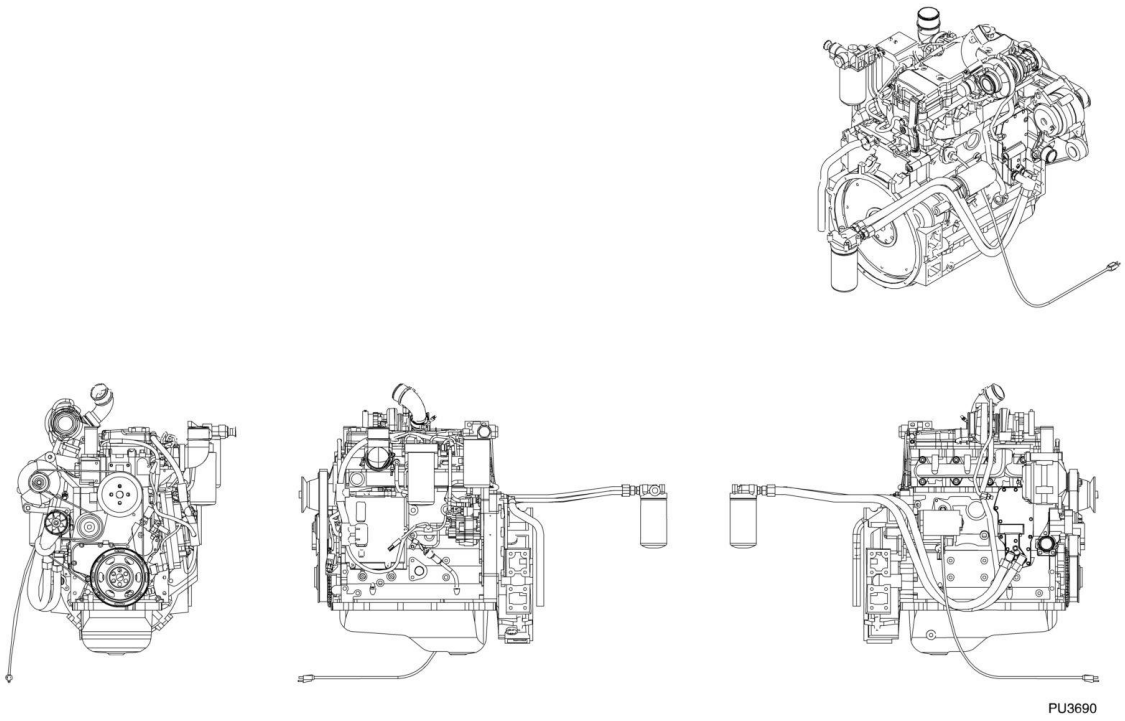

FIGURE 4-4. ENGINE (SN 0160044254 through 0160049550)

ITEM	PART NUMBER	QTY	DESCRIPTION	REV
	1001137644	1	ENGINE, 110 HP, TIER III	B
	70023443	1	BLOCK HEATER	
	70023444	1	BLOCK HEATER CABLE	
	70024463	1	FLYWHEEL	
	70023736	1	FLYWHEEL RING	
	70024464	1	12V ALTERNATOR	
	7029947	1	OIL PRESSURE SWITCH, (includes o-ring)	
	70020351	1	DIPSTICK TUBE	
	70020350	1	DIPSTICK	
	70020352	1	STARTER	
	70020349	1	PRIMARY FUEL FILTER	
	70020348	1	SECONDARY FUEL FILTER	
	70024465	1	OIL FILTER	

FIGURE 4-5. ENGINE (644E SN 0160048717 to Present, Including 0160045421; 944E SN 0160049678 to Present)

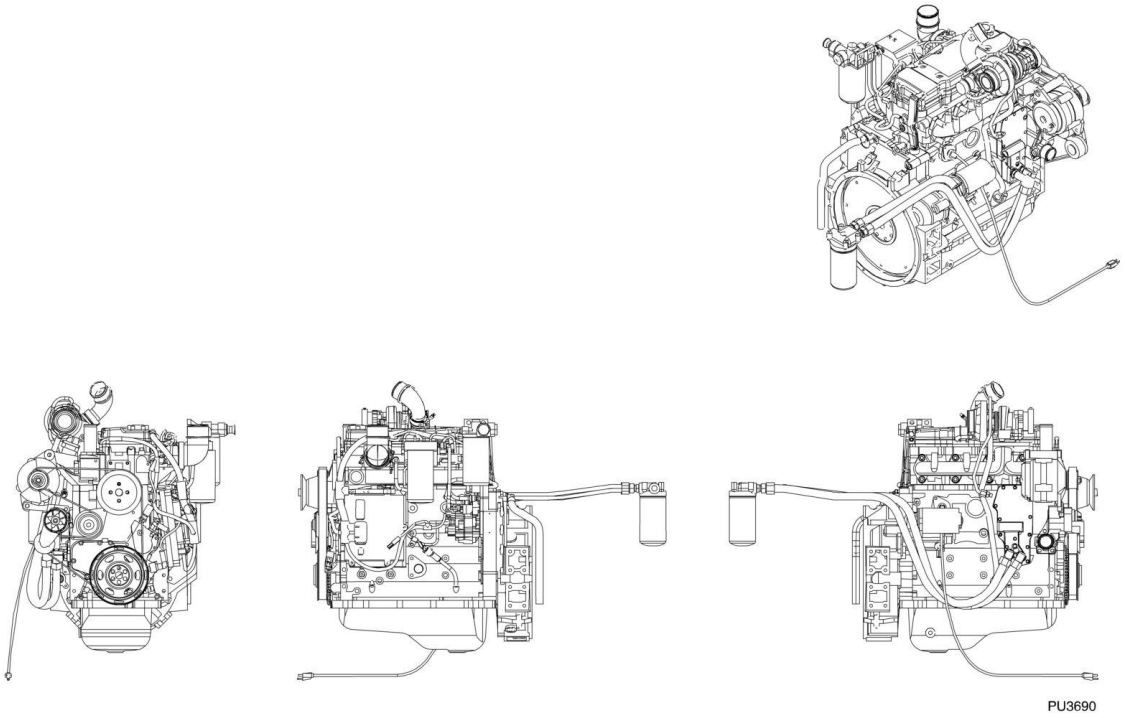

FIGURE 4-5. ENGINE (644E SN 0160048717 to Present, Including 0160045421; 944E SN 0160049678 to Present)

ITEM	PART NUMBER	QTY	DESCRIPTION	REV
	1001147574	1	ENGINE, 110 HP, TIER III, (includes all items)	C
	70023443	1	BLOCK HEATER	
	70023444	1	BLOCK HEATER CABLE	
	70024464	1	12V ALTERNATOR	
	70024463	1	FLYWHEEL	
	70023736	1	FLYWHEEL RING	
	70020348	1	SECONDARY FUEL FILTER	
	70024465	1	OIL FILTER	
	70020351	1	DIPSTICK TUBE	
	70020350	1	DIPSTICK	
	1001128594	1	STARTER	
	70020349	1	PRIMARY FUEL FILTER	

FIGURE 4-6. FUEL SYSTEM (644E Prior to SN 0160048717, Excluding 0160045421; 944E Prior to SN 0160041827)

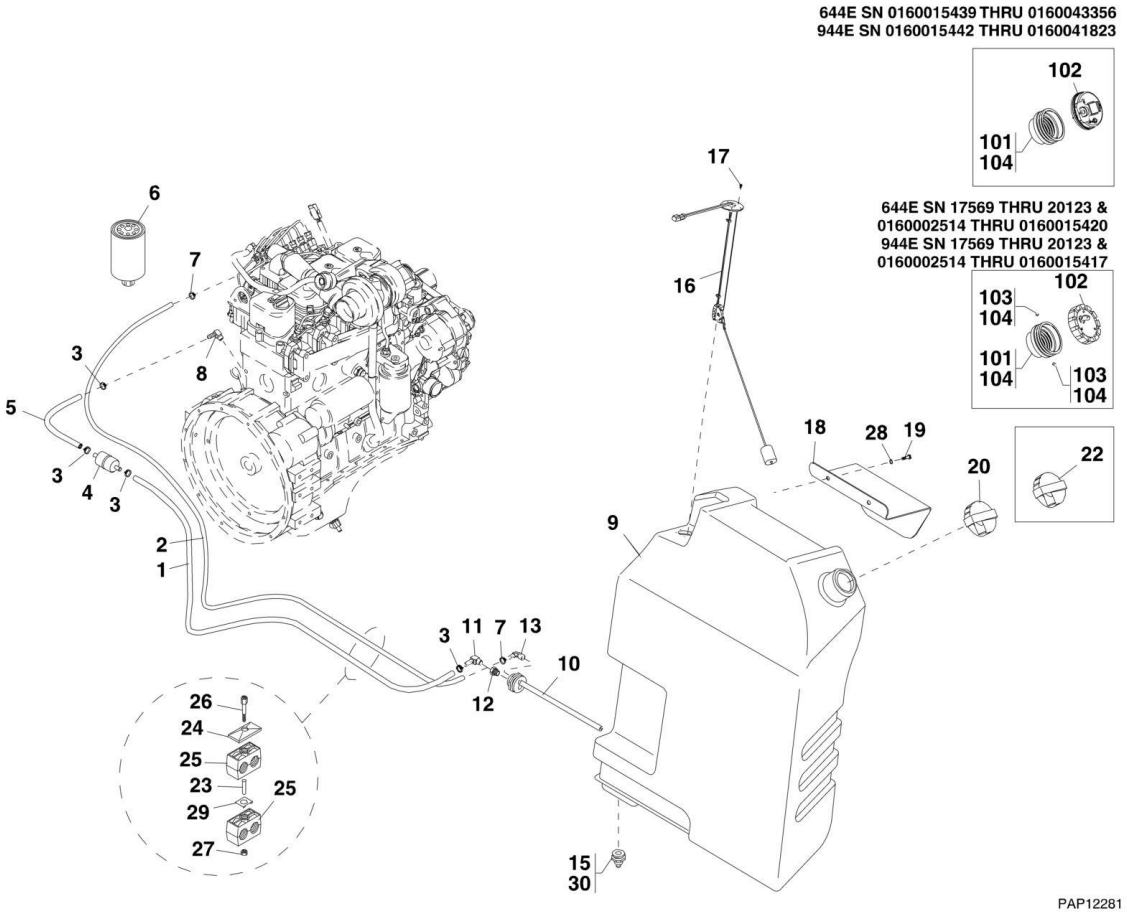

FIGURE 4-6. FUEL SYSTEM (644E Prior to SN 0160048717, Excluding 0160045421; 944E Prior to SN 0160041827)

ITEM	PART NUMBER	QTY	DESCRIPTION	REV
1	7300379	1	FUEL SUPPLY HOSE ASSEMBLY	
2	7300378	1	FUEL RETURN HOSE ASSEMBLY	
3	8410013	4	HOSE CLAMP, #6	
4	8274022	1	INLINE FUEL FILTER	
5	7300377	1	FUEL SUPPLY HOSE ASSEMBLY	
6	8320270	1	PRIMARY FUEL FILTER, (644E, Tier I)	
6	7028838	1	PRIMARY FUEL FILTER, (644E, Tier II)	
6	8320278	1	PRIMARY FUEL FILTER, (944E, Tier II)	
7	8405009	2	HOSE CLAMP, 7/32 DIA	
8	8420229	1	ELBOW, 3/8 HOSE	
9	7151246	1	FUEL TANK, (includes items 10, 15 & 30) **(644E SN 17569 through 20123, SN 0160002514 through 0160015420; 944E SN 17569 through 20123, SN 0160002514 through 0160015417)**	E
9	4400473	1	FUEL TANK, (includes items 10, 15 & 30) **(644E SN 0160015439 through 0160043356; 944E SN 0160015442 through 0160041823)**	D
10	NOTSOLDSEPARATELY	1	BULKHEAD FITTING ASSEMBLY, PICK-UP-TUBES, (includes items 11 thru 14)	
11	8420229	1	ELBOW, 90, HOSE BARB #6-4P	
12	8530041	1	PIPE ADAPTER, FEMALE TO MALE, 0.250 TO 0.250	
13	10728873	1	ADAPTER, 90, 5/16 HOSE TO 1/4	
14	NOTSOLDSEPARATELY	1	BULKHEAD FITTING, PICK-UP-TUBES, (not shown)	
15	8036601	1	FUEL DRAIN, 3/8	
16	7301076	1	FUEL SENDER ASSEMBLY WITH GASKET	
17	8303515	5	HEX HD CAPSCREW, M4X10, GR8.8	
18	7300510	1	TOP FUEL TANK SUPPORT	
19	8303618	2	HEX HD CAPSCREW, M12X25, GR8.8	
20	2915155	1	KEYED FUEL CAP KIT, (includes items 103 & 104) **(644E SN 17569 through 20123, SN 0160002514 through 0160015420; 944E SN 17569 through 20123, SN 0160002514 through 0160015417)**	
20	1001102657	1	LOCKABLE FUEL CAP KIT, (if equipped), (not shown), (includes items 101, 102 & 104) **(644E SN 0160015439 through 0160043356; 944E SN 0160015442 through 0160041823)**	
22	6623749	1	NON-LOCKING FUEL CAP **(644E SN 17569 through 20123; 644E SN 0160002514 through 0160015420; 944E SN 17569 through 20123, SN 0160002514 through 0160015417)**	
22	1001093641	1	NON-LOCKING FUEL CAP **(644E SN 0160015439 through 0160043356; 944E SN 0160015442 through 0160041823)**	
23	8303550	1	HEX HD CAPSCREW, M8X60, GR8.8	
24	8750025	1	TWIN CLAMP COVER	
25	8750022	1	CLAMP	
26	8303528	1	HEX HD CAPSCREW, M8X65, GR8.8	
27	8750043	1	RAIL NUT	
28	8307220	2	PLAIN WASHER, 12mm	
29	8750017	1	LOCKING PLATE	
30	70021599	1	BULKHEAD FITTING, 1/4IN NPT BRASS, LEFT HAND THREAD	
101	0080271	1	FILLER NECK ADAPTER **(644E SN 17569 through 20123, SN 0160002514 through 0160015420; 944E SN 17569 through 20123, SN 0160002514 through 0160015417)**	
101	1001001422	1	FILLER NECK ADAPTER **(644E SN 0160015439 through 0160043356; 944E SN 0160015442 through 0160041823)**	

ITEM	PART NUMBER	QTY	DESCRIPTION	REV
102	1120591	1	KEYED FUEL CAP, (comes with 2 keys; replacement keys not available) **(644E SN 17569 through 20123, SN 0160002514 through 0160015420; 944E SN 17569 through 20123, SN 0160002514 through 0160015417)**	
102	1001080707	1	LOCKABLE FUEL CAP **(644E SN 0160015439 through 0160043356; 944E SN 0160015442 through 0160041823)**	
103	3900140	2	SET SCREW, 1/4-20X3/8	
104	14404978	AR	LOCTITE 641 (apply to item 101 & 103) **(644E SN 17569 through 20123, SN 0160002514 through 0160015420; 944E SN 17569 through 20123, SN 0160002514 through 0160015417)**	
104	0100093	AR	LOCTITE 30512 (apply to item 101) **(644E SN 0160015439 through 0160043356; 944E SN 0160015442 through 0160041823)**	

FIGURE 4-7. FUEL SYSTEM (644E SN 0160048717 to Present, Including 0160045421; 944E SN 0160041827 to Present)

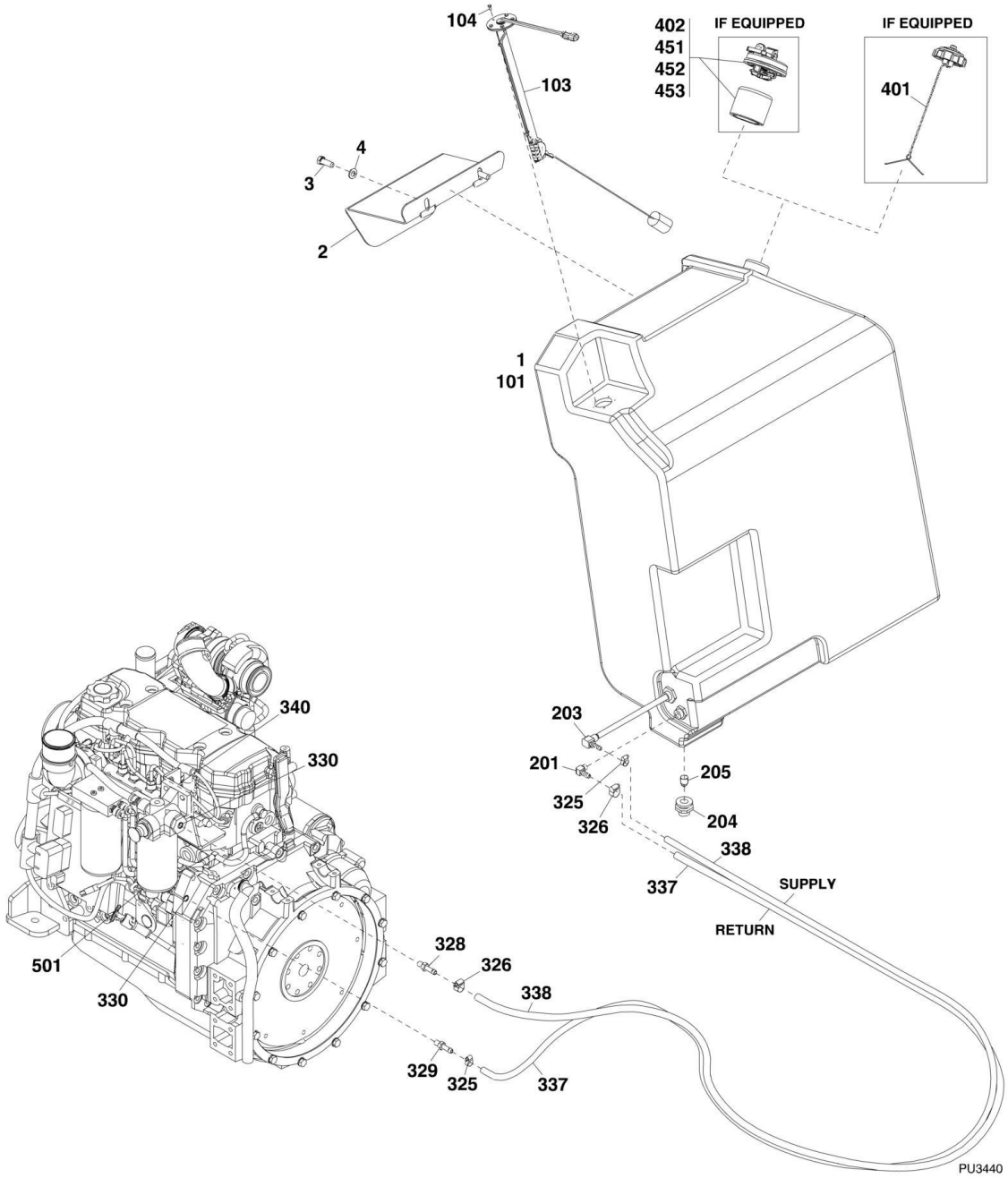

FIGURE 4-7. FUEL SYSTEM (644E SN 0160048717 to Present, Including 0160045421; 944E SN 0160041827 to Present)

ITEM	PART NUMBER	QTY	DESCRIPTION	REV
	7300275	Ref	FUEL TANK INSTALLATION, (not available to order, see items 1 thru 4 for service)	C
1	7151245	1	FUEL TANK ASSEMBLY, (includes items 101 thru 104)	F
2	7300510	1	TOP FUEL TANK SUPPORT	
3	8303519	2	HEX HD CAPSCREW, M12X35, GR8.8	
4	8307220	2	WASHER, 12mm	
101	4400473	1	FUEL TANK, (includes items 201 thru 205)	D
103	7301076	1	FUEL SENDER ASSEMBLY WITH GASKET	
104	8303515	5	HEX HD CAPSCREW, M4X10, GR8.8	
201	8420229	1	ELBOW, 90, HOSE BARB #6-4P	
203	10728873	1	ADAPTER, 90, 5/16 HOSE TO 1/4	
204	8036601	1	FUEL DRAIN, 3/8	
205	70021599	1	BULKHEAD FITTING, 1/4IN NPT BRASS, LEFT HAND THREAD	
325	8405009	2	GEAR CLAMP, (torque to 12-15 lb-ft)	
326	8410013	2	GEAR CLAMP, (torque to 40 lb-ft)	
328	1001093891	1	HOSE COUPLING	
329	1001093892	1	HOSE COUPLING	
330	1001093944	2	SPECIAL SEALING WASHER	
337	1001114943	1	HOSE, (fuel return)	
338	1001114944	1	HOSE, (fuel supply)	
340		Ref	FUEL FILTER BRACKET, (See ENGINE INSTALLATION for Breakdown)	
401	1001093641	1	NON-LOCKING FUEL TANK CAP, (if equipped)	
402	1001102657	1	LOCKING FUEL TANK CAP, (includes items 451 thru 453), (if equipped)	A
451	1001001422	1	FILLER NECK ADAPTOR	
452	1001080707	1	CAP	
453	0100093	AR	LOCTITE 30512	
501		Ref	PRIMARY FUEL FILTER, (See ENGINE for Breakdown)	

FIGURE 4-8. RADIATOR AND OIL COOLER MOUNTING (644E SN 17569 through 20123, SN 0160002514 through 0160009050; 944E SN 17569 through 20123, SN 0160002514 through 0160009044)

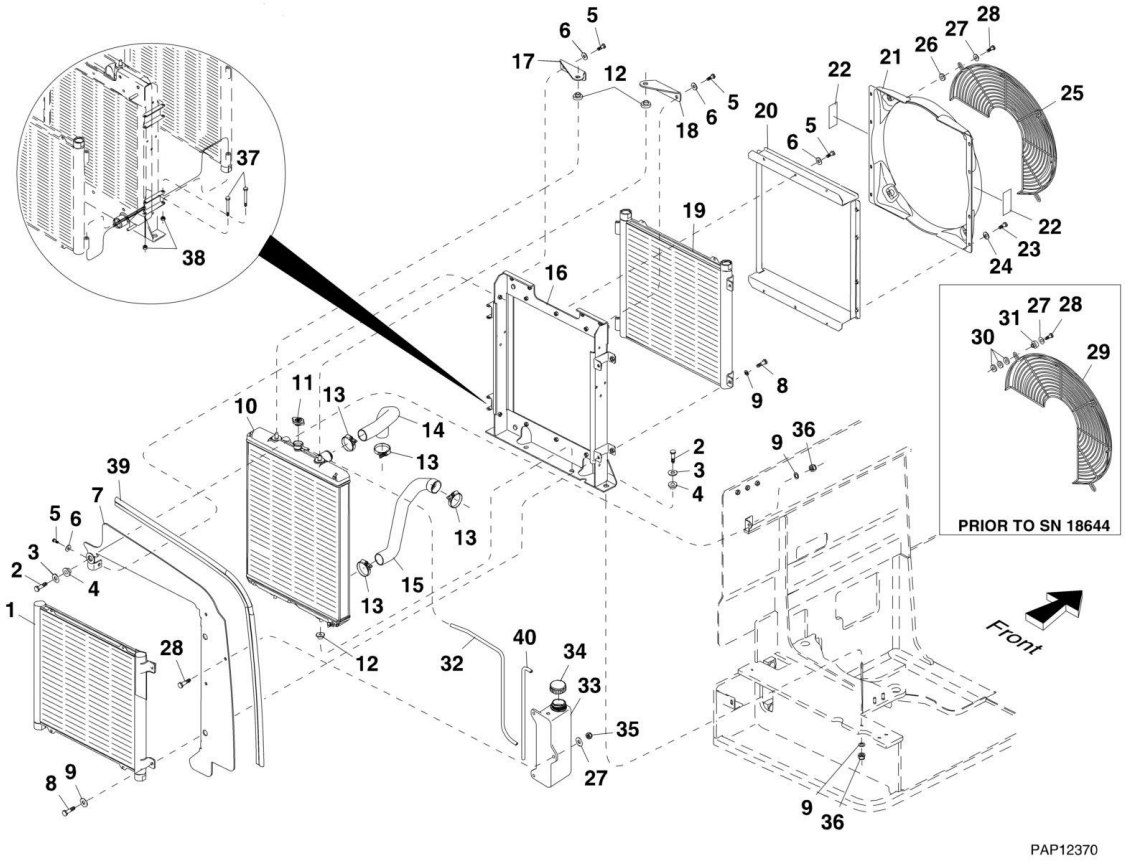

FIGURE 4-8. RADIATOR AND OIL COOLER MOUNTING (644E SN 17569 through 20123, SN 0160002514 through 0160009050; 944E SN 17569 through 20123, SN 0160002514 through 0160009044)

ITEM	PART NUMBER	QTY	DESCRIPTION	REV
	8180219	Ref	RADIATOR ASSEMBLY, (includes items 1, 5 thru 12, 16 thru 20, 23 thru 28, 32 thru 35, 37, 38 & 40)	B
1	8180216	1	TRANSMISSION OIL COOLER ASSEMBLY	
2	8303097	3	HEX HD CAPSCREW, M10X65, GR8.8	
3	7057141	3	REBOUND WASHER	
4	8278020	3	RUBBER MOUNT	
5	8303606	11	HEX HD CAPSCREW, M8X22, GR8.8	
6	8307222	11	PLAIN WASHER, 8mm	
7	7300374	1	COWLING PLATE	
8	8303798	4	HEX HD CAPSCREW, M10X25, GR8.8	
9	8307221	7	PLAIN WASHER, 10mm	
10	8180210	1	RADIATOR ASSEMBLY	
11	8180311	1	RADIATOR PRESSURE CAP, 13PSI	
12	8180324	4	RUBBER CUSHION	
13	8405104	4	HOSE CLAMP, #28	
14	7300287	1	UPPER RADIATOR HOSE	
15	7300288	1	LOWER RADIATOR HOSE	
16	8180327	1	FRAME ASSEMBLY	
17	8180326	1	LEFT FRAME BRACKET	
18	8180325	1	RIGHT FRAME BRACKET	
19	8180215	1	HYDRAULIC OIL COOLER ASSEMBLY	
20		Ref	SHROUD SPACER ASSEMBLY, (no longer available, order Kit 2915055 on RADIATOR AND OIL COOLER MOUNTING for replacement) **(644E SN 0160012140 through 0160009050; 944E SN 0160012143 through 01600418223)**	
21		Ref	FAN SHROUD KIT, (includes item 22),(no longer available, order Kit 2915055 on RADIATOR AND OIL COOLER MOUNTING for replacement) **(644E SN 0160012140 through 016009050; 944E SN 0160012143 through 01600418223)**	
22	4110184	2	DECAL	
23	8303656	8	HEX HD CAPSCREW, 5/16-18X7/8	
24	8307106	8	PLAIN NARROW WASHER, .312X.344X.688X.065	
25	8180332	1	FAN GUARD	
26	8307203	3	PLAIN WASHER	
27	8307222	6	PLAIN WASHER, 8-8.4-17, 1.6mm	
28	8303611	6	HEX HD CAPSCREW, M8X30, GR8.8	
29		Ref	FAN GUARD, (replace with items 25, 26 & 27)	
30		Ref	PLAIN WASHER, 8.4 ID X 21 OD 4mm, (replace with items 25, 26 & 27)	
31		Ref	SPACER, (replace with items 25, 26 & 27)	
32	8180330	1	OVERFLOW HOSE, 700 LG	
33	8180320	1	OVERFLOW BOTTLE	
34	8866341	1	OVERFLOW BOTTLE CAP	
35	8305043	3	HEX NUT, M8X1.25, GR8.8	
36	8305630	3	HEX LOCKNUT, M10X1.5	
37	8303107	4	HEX HD CAPSCREW, 3/8-16X3-1/4	
38	8305645	4	HEX NUT, 3/8-16	
39	7300375	1	SEAL BULB	
40	8180329	1	OVERFLOW HOSE, 500 LG	

FIGURE 4-9. RADIATOR AND OIL COOLER MOUNTING (644E SN 0160009073 through 0160043356; 944E SN 0160009075 through 0160041823)

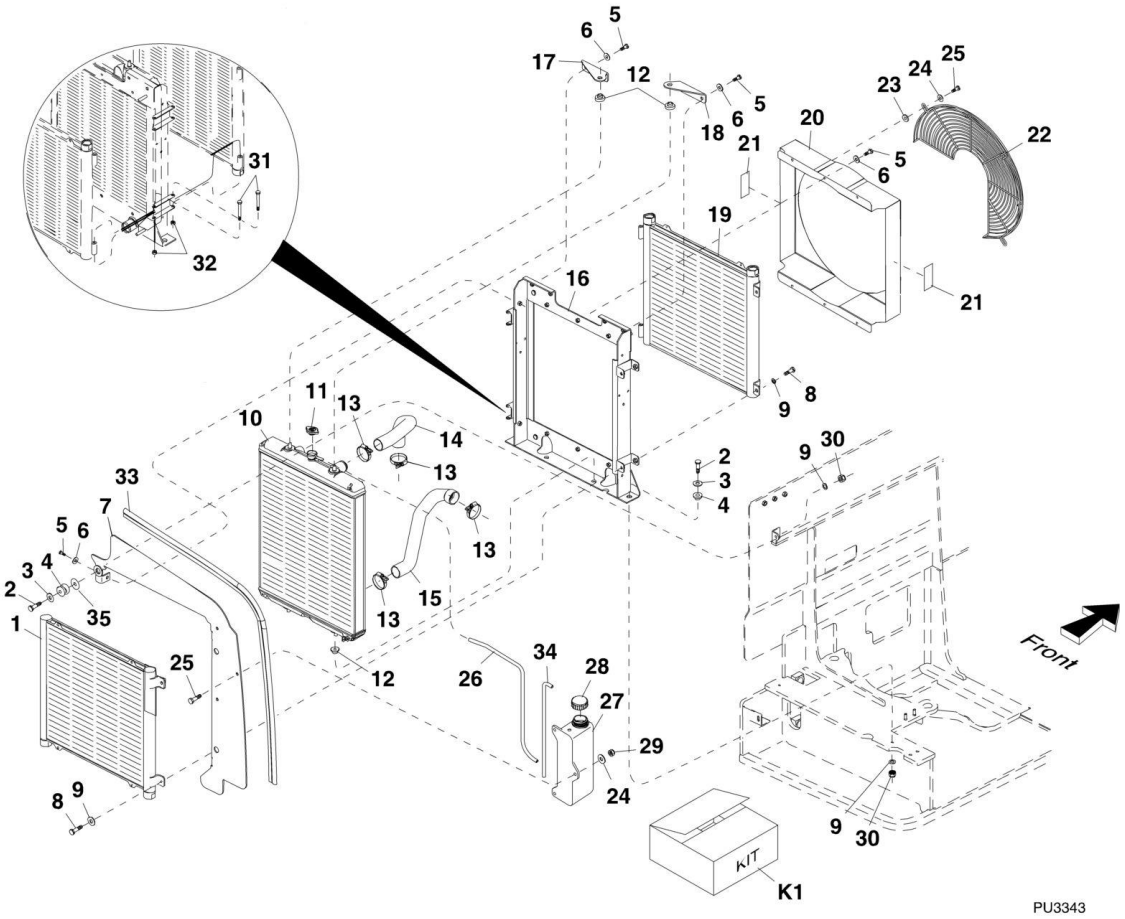

FIGURE 4-9. RADIATOR AND OIL COOLER MOUNTING (644E SN 0160009073 through 0160043356; 944E SN 0160009075 through 0160041823)

ITEM	PART NUMBER	QTY	DESCRIPTION	REV
	3620060	Ref	RADIATOR INSTALLATION, (includes items 1, 5 thru 12, 16 thru 20, 22 thru 29, 31, 32 & 34)	
	7300272	Ref	REAR COOLING SUPPORT ASSEMBLY, (includes items 2 thru 4, 9, 30 & 35)	D
1	8180216	1	TRANSMISSION OIL COOLER ASSEMBLY	
2	8303097	3	HEX HD CAPSCREW, M10X65, GR8.8	
3	7057141	3	REBOUND WASHER	
4	8278020	3	RUBBER MOUNT	
5	8303606	11	HEX HD CAPSCREW, M8X22, GR8.8	
6	8307222	11	PLAIN WASHER, 8mm	
7	7300374	1	COWLING PLATE	
8	8303798	4	HEX HD CAPSCREW, M10X25, GR8.8	
9	8307221	7	PLAIN WASHER, 10mm	
10	8180210	1	RADIATOR ASSEMBLY	
11	8180311	1	RADIATOR PRESSURE CAP, 13PSI	
12	8180324	4	RUBBER CUSHION	
13	8405104	4	HOSE CLAMP, #28	
14	7300287	1	UPPER RADIATOR HOSE	
15	2720557	1	LOWER RADIATOR HOSE	
16	8180327	1	FRAME ASSEMBLY	
17	8180326	1	LEFT FRAME BRACKET	
18	8180325	1	RIGHT FRAME BRACKET	
19	8180215	1	HYDRAULIC OIL COOLER ASSEMBLY	
20	7029081	1	SHROUD ASSEMBLY	
21	4110184	2	DECAL	
22	8180332	1	FAN GUARD	
23	8307203	3	PLAIN WASHER	
24	8307222	6	PLAIN WASHER, 8-8.4-17, 1.6mm	
25	8303611	6	HEX HD CAPSCREW, M8X30, GR8.8	
26	8180330	1	OVERFLOW HOSE, 700 LG	
27	8180320	1	OVERFLOW BOTTLE	
28	8866341	1	OVERFLOW BOTTLE CAP	
29	8305043	3	HEX NUT, M8X1.25, GR8.8	
30	8305630	3	HEX LOCKNUT, M10X1.5	
31	8303107	4	HEX HD CAPSCREW, 3/8-16X3-1/4	
32	8305645	4	HEX NUT, 3/8-16	
33	7300375	1	SEAL BULB	
34	8180329	1	OVERFLOW HOSE, 500 LG	
35	8310621	AR	FEND WASHER, 10M-5/16-18 THD	
K1	2915055	1	FAN SHROUD KIT, (includes items 5, 13, 15, 20, 21 & 24)	

FIGURE 4-10. RADIATOR AND OIL COOLER MOUNTING (644E SN 0160048717 to Present, Including 0160045421; 944E SN 0160041827 to Present)

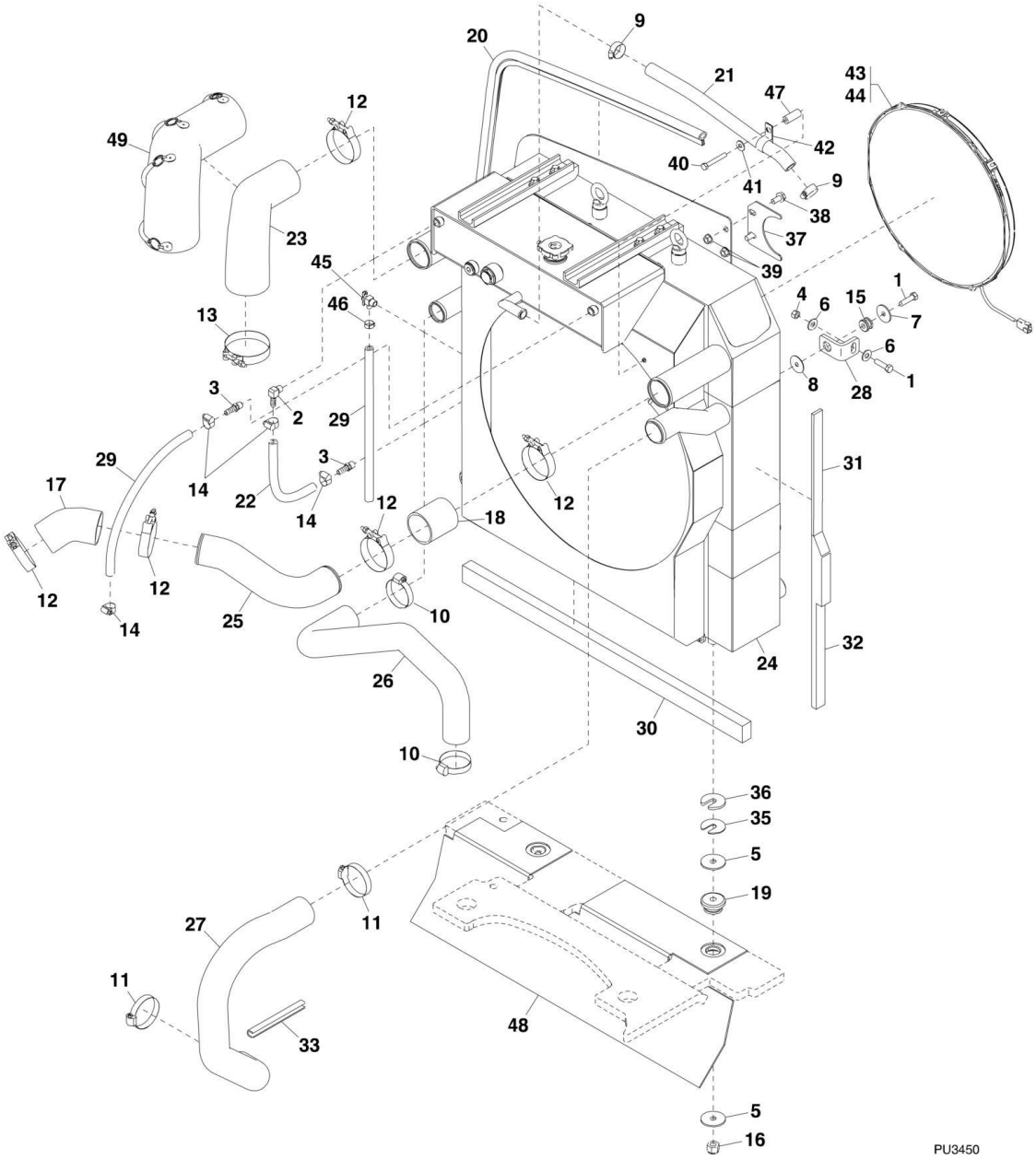

FIGURE 4-10. RADIATOR AND OIL COOLER MOUNTING (644E SN 0160048717 to Present, Including 0160045421; 944E SN 0160041827 to Present)

ITEM	PART NUMBER	QTY	DESCRIPTION	REV
	1001121911	Ref	RADIATOR INSTALLATION, (not available to order, see items 1 thru 49 for service)	B
1	0641611	2	HEX HD CAPSCREW, 3/8-16X1-3/8, GR5	
2	2180467	1	BARBED ELBOW, 90	
3	2220767	2	BARBED STRAIGHT FITTING	
4	3271601	1	HEX NUT, 3/8-16, GR8	
5	4740274	4	SPECIAL WASHER	
6	4751600	2	WASHER, 3/8	
7	7057141	1	FLAT WASHER	
8	8310246	1	WASHER, 3/8	
9	8405007	2	GEAR CLAMP, 1.25 DIA, (torque to 40 lb-in)	
10	8405201	2	GEAR CLAMP, 2.5 DIA, (torque to 40 lb-in)	
11	8405202	2	GEAR CLAMP, 2.75 DIA, (torque to 40 lb-in)	
12	8405212	5	HEAVY DUTY T-BOLT CLAMP, (torque to 50 lb-in)	
13	8405306	1	T-BOLT CLAMP, (torque to 50 lb-in)	
14	8410013	4	GEAR CLAMP, 0.78 DIA	
15	83683308	1	MOUNTING PAD	
16	88521208	2	LOCKNUT, 1/2-13	
17	1001098971	1	TUBE	
18	1001099251	1	HOSE	
19	1001114803	2	ISOLATOR MOUNT	
20	1001116122	59 in	BULB SEAL	
21	1001116177	1	HOSE	
22	1001121341	1	HOSE	
23	1001121568	1	HOSE	
24	1001121579	1	RADIATOR ASSEMBLY	B
24	70023926	1	RADIATOR CAP	
24	70023927	1	SURGE TANK	
25	1001121586	1	TUBE	
26	1001121599	1	HOSE	
27	1001121600	1	HOSE	
28	1001121843	1	BRACKET	
29	1001122286	2	HOSE	
30	1001122313	1	FOAM SEAL	
31	1001122314	1	FOAM SEAL	
32	1001122315	1	FOAM SEAL	
33	90206202	6 in	TRIM LOCK	
34		Ref	COOLANT FILL DECAL, (not shown), (See DECAL SECTION for Breakdown)	
35	1001120376	2	SHIM	
36	1001120377	2	SHIM	
37	1001131727	1	BRACKET	
38	5201010	2	RIPP BOLT, M10X20	
39	5221000	2	RIPP NUT, 10mm	
40	0641518	1	HEX HD CAPSCREW, 5/16-18X2-1/4, GR5	
41	4751500	1	WASHER, 5/16	
42	80673023	1	SUPPORT CLAMP	
43	1001131527	1	16IN ELECTRIC FAN	
44	1001131528	1	FAN BRACKET	

ITEM	PART NUMBER	QTY	DESCRIPTION	REV
45	1001132178	1	DRAIN VALVE	
46	1001132205	1	HOSE CLAMP	
47	1001132276	1	SPACER	
48	1001132301	1	SEAL	
49	1001131631	1	HOSE INSULATION	

FIGURE 4-11. AIR CLEANER INSTALLATION (644E SN 17569 through 20123, SN 0160002514 through 0160011781; 944E SN 17569 through 20123, SN 0160002514 through 0160011778)

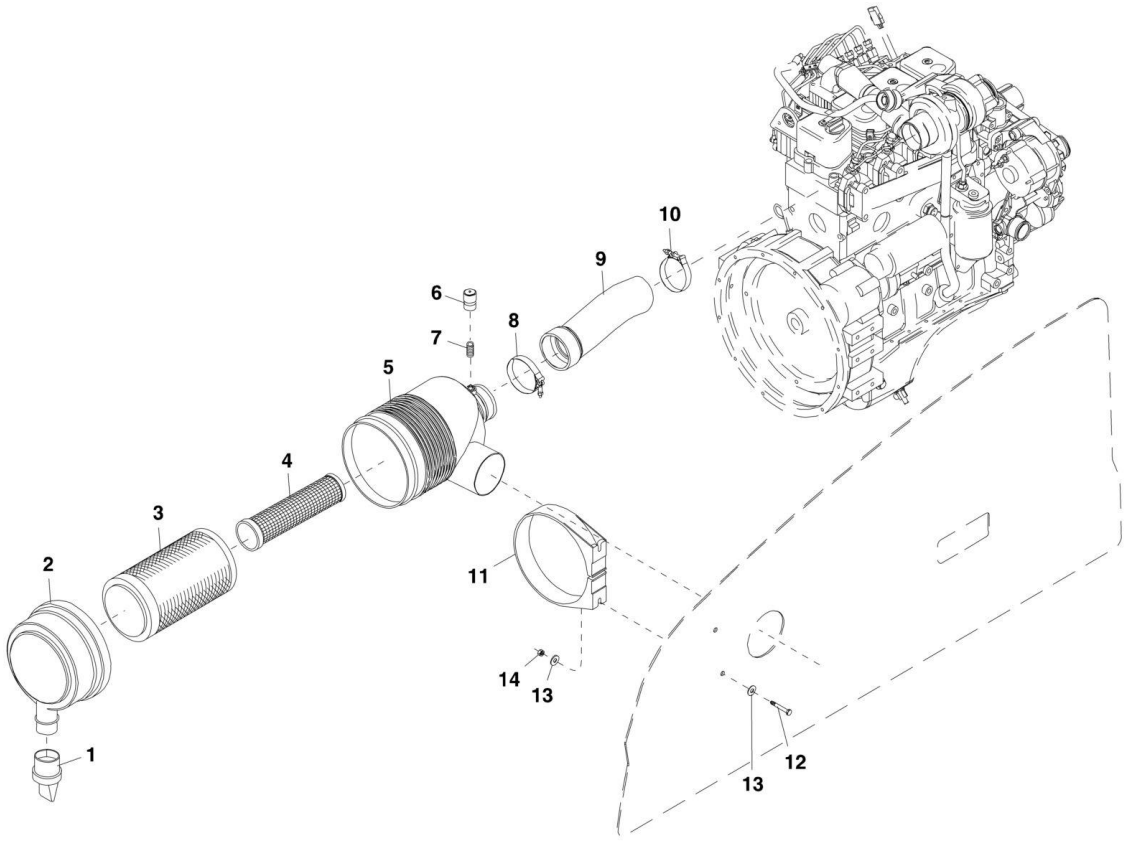

FIGURE 4-11. AIR CLEANER INSTALLATION (644E SN 17569 through 20123, SN 0160002514 through 0160011781; 944E SN 17569 through 20123, SN 0160002514 through 0160011778)

ITEM	PART NUMBER	QTY	DESCRIPTION	REV
	8273029	1	AIR CLEANER ASSEMBLY, (includes items 1 thru 5)	
1	8036869	1	VACUATOR VALVE	
2	8036868	1	COVER ASSEMBLY	
3	1101312	1	PRIMARY FILTER	
4	1101313	1	SAFETY FILTER	
5	N.S.S.	1	BODY ASSEMBLY	
6	8223527	1	VACUUM SWITCH	
7	8551001	1	NIPPLE CLOSE, #2 DIA X 0.75 LG	
8	8405404	1	T-BOLT CLAMP	
9	7300285	1	AIR INTAKE HOSE	
10	8410007	1	T-BOLT CLAMP	
11	10268516	1	AIR CLEANER MOUNTING BAND	
12	8303528	2	HEX HD CAPSCREW, M8X65, GR8.8	
13	8310617	4	PLAIN WASHER, 8mm	
14	8305654	2	HEX LOCKNUT, M8X1.25	

FIGURE 4-12. AIR CLEANER INSTALLATION (644E SN 0160011807 through 0160043356; 944E SN 0160011804 through 0160041823)

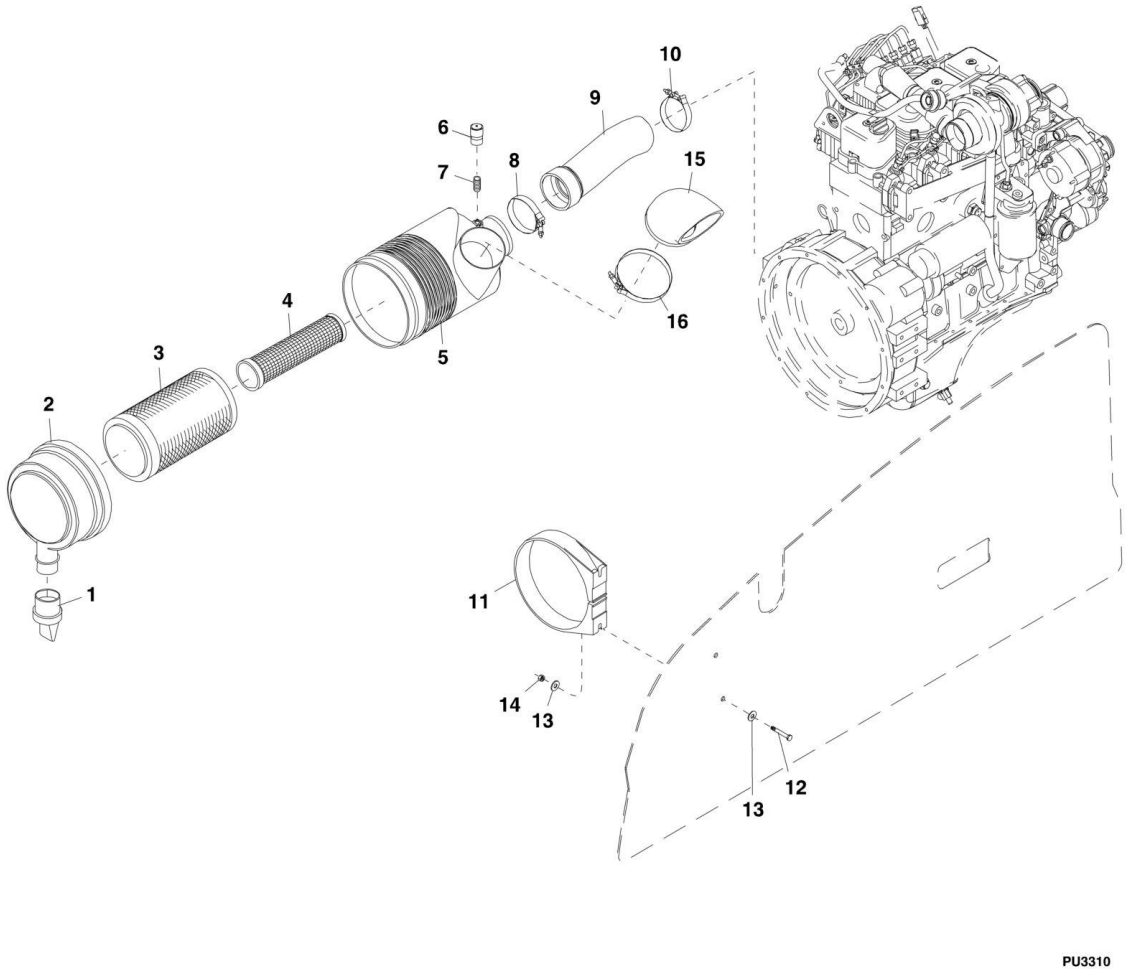

FIGURE 4-12. AIR CLEANER INSTALLATION (644E SN 0160011807 through 0160043356; 944E SN 0160011804 through 0160041823)

ITEM	PART NUMBER	QTY	DESCRIPTION	REV
	8273029	1	AIR CLEANER ASSEMBLY, (includes items 1 thru 5)	
1	8036869	1	VACUATOR VALVE	
2	8036868	1	COVER ASSEMBLY	
3	1101312	1	PRIMARY FILTER	
4	1101313	1	SAFETY FILTER	
5	N.S.S.	1	BODY ASSEMBLY	
6	8223527	1	VACUUM SWITCH	
7	8551001	1	NIPPLE CLOSE, #2 DIAX.75 LG	
8	8405404	1	T-BOLT CLAMP	
9	7300285	1	AIR INTAKE HOSE	
10	8410007	1	T-BOLT CLAMP	
11	10268516	1	AIR CLEANER MOUNTING BAND	
12	8303528	2	HEX HD CAPSCREW, M8X65, GR8.8	
13	8310617	4	PLAIN WASHER, 8mm	
14	8305654	2	HEX LOCKNUT, M8X1.25	
15	1560023	1	AIR INTAKE SCOOP	
16	8410021	1	T-BOLT CLAMP, 5	

FIGURE 4-13. AIR CLEANER INSTALLATION (644E SN 0160048717 to Present, Including 0160045421; 944E SN 0160041827 to Present)

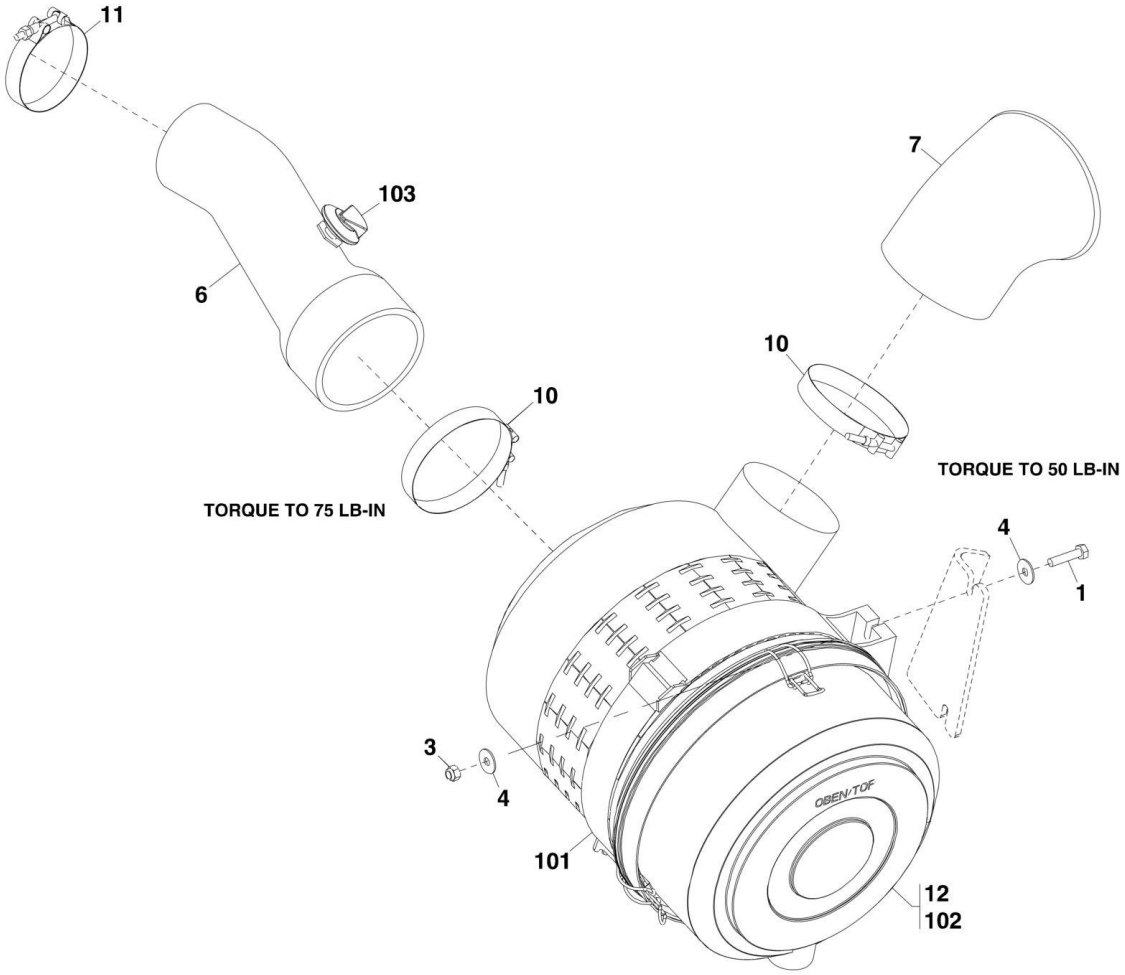

FIGURE 4-13. AIR CLEANER INSTALLATION (644E SN 0160048717 to Present, Including 0160045421; 944E SN 0160041827 to Present)

ITEM	PART NUMBER	QTY	DESCRIPTION	REV
	1001112310	Ref	AIR CLEANER INSTALLATION, (not available to order, see items 1 thru 12 for service)	C
1	0760815	2	HEX HD CAPSCREW, M8X35, GR8.8, (torque to 26 Nm/20 lb-ft)	
3	8305654	2	HEX LOCKNUT, M8X1.25	
4	8310617	4	WASHER, 8mm	
6	1001130369	1	HOSE	
7	1001112312	1	INTAKE DUCT	
10	8410021	2	T-BOLT CLAMP, 5IN	
11	8410007	1	T-BOLT CLAMP, (torque to 75 lb-in)	
12	1001130445	1	AIR CLEANER ASSEMBLY, (includes items 101 thru 103)	A
101	1001130443	1	AIR CLEANER CLAMP	
102	1001130444	1	AIR CLEANER	
102	70023878	1	AIR CLEANER PRIMARY ELEMENT	
102	70023879	1	AIR CLEANER SECONDARY ELEMENT	
103	1001130452	1	INTAKE VACUUM SWITCH	

FIGURE 4-14. EXHAUST INSTALLATION (644E SN 17569 through 20123, SN 0160002514 through 0160009050; 944E SN 17569 through 20123, SN 0160002514 through 0160009044)

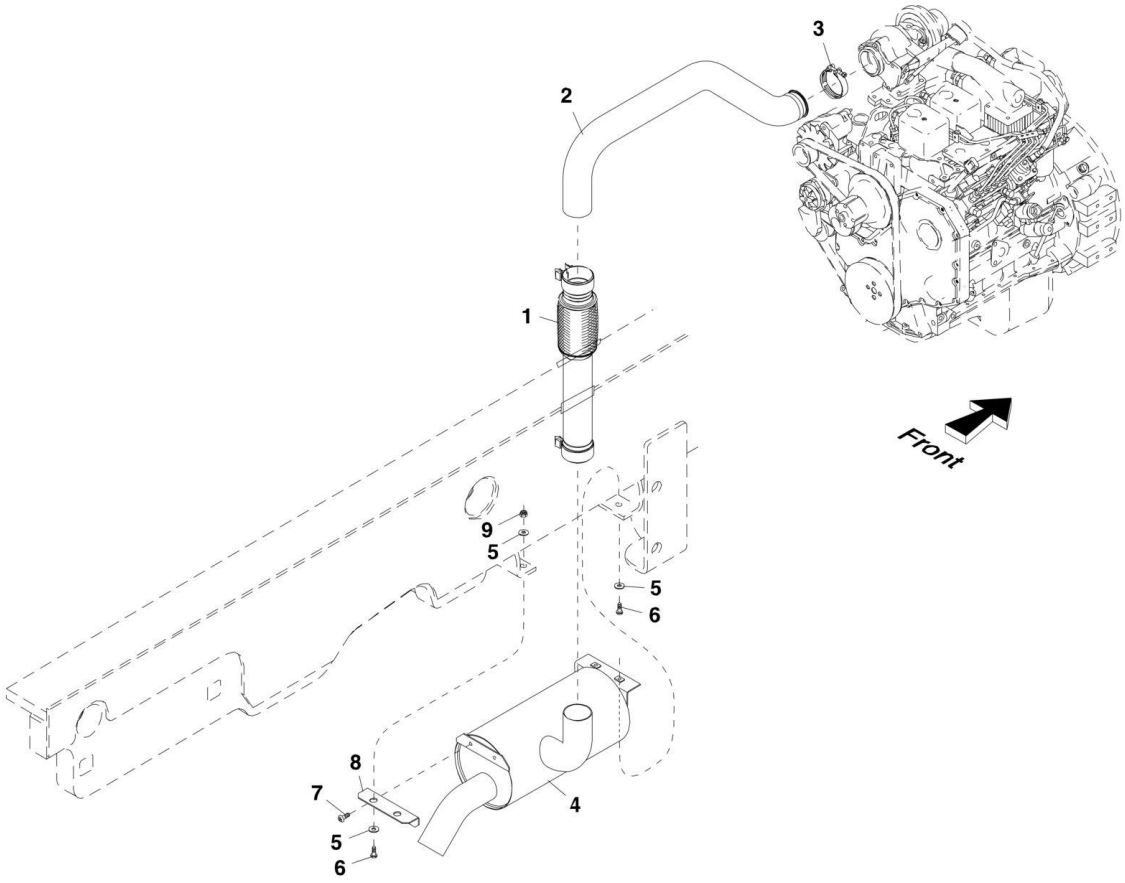

NOTE: IF YOUR 644E/944E MACHINE IS EQUIPPED WITH EXHAUST SYSTEM SHOWN ON THIS PAGE, IT IS RECOMMENDED TO REPLACE IT WITH RETRO FIT KIT, 2915032, SHOWN ON FIGURE 4-6, 644E SN 0160009073 thru 0160009050; 944E SN 0160009075 THRU 0160009044.

PU1910

FIGURE 4-14. EXHAUST INSTALLATION (644E SN 17569 through 20123, SN 0160002514 through 0160009050; 944E SN 17569 through 20123, SN 0160002514 through 0160009044)

ITEM	PART NUMBER	QTY	DESCRIPTION	REV
1	8275044	1	BELLOWS PIPE	
2	7139919	1	EXHAUST PIPE	
3	8275240	1	V BAND CLAMP	
4	8275042	1	ROUND MUFFLER	
5	8310621	6	FENDER WASHER, 10X30mm	
6	8303798	4	HEX HD CAPSCREW, M10X25, GR8.8	
7	8303551	2	HEX HD CAPSCREW, M10X16, GR8.8	
8	7301165	1	MUFFLER BRACKET	
9	8305038	2	HEX NUT, 10mm	

FIGURE 4-15. EXHAUST INSTALLATION (644E SN 0160009073 through 0160043356; 944E SN 0160009075 through 0160041823)

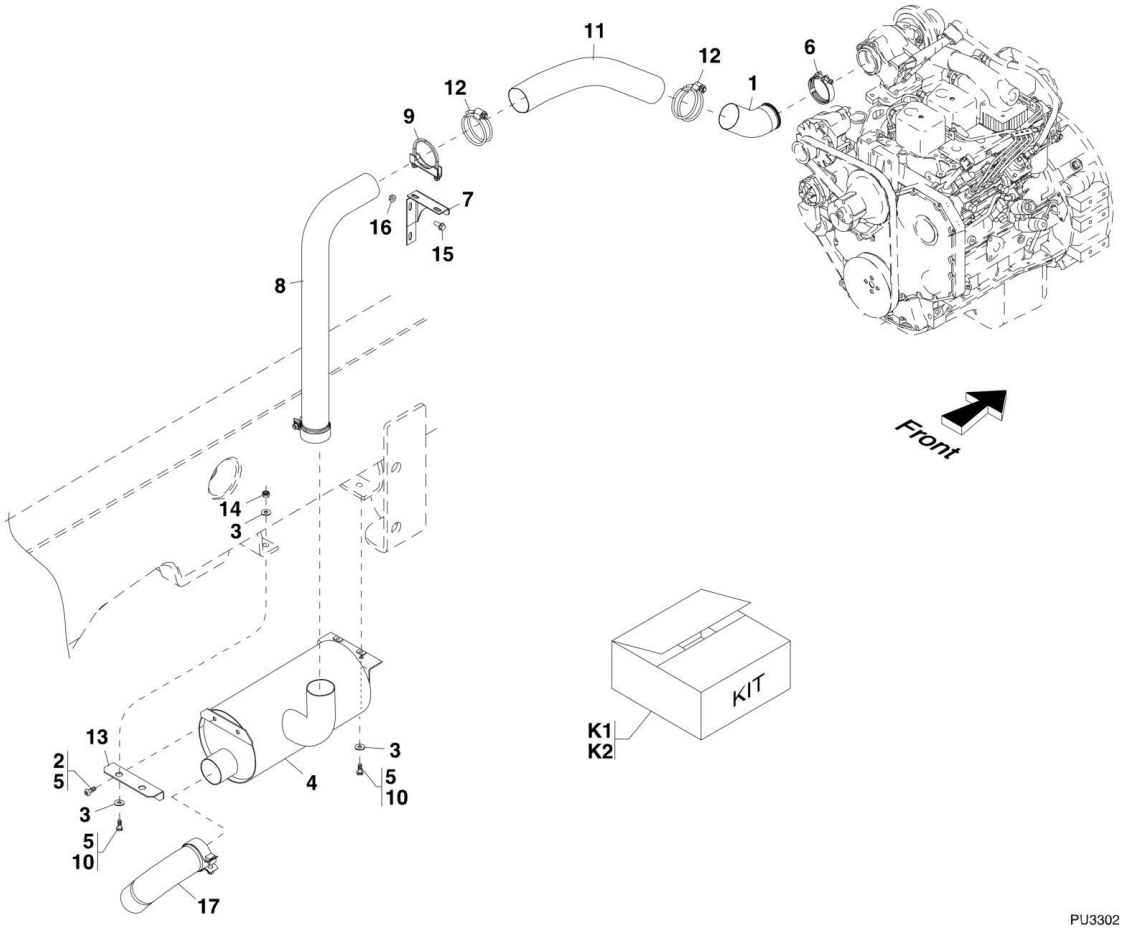

FIGURE 4-15. EXHAUST INSTALLATION (644E SN 0160009073 through 0160043356; 944E SN 0160009075 through 0160041823)

ITEM	PART NUMBER	QTY	DESCRIPTION	REV
1	3460408	1	TURBO EXHAUST PIPE	
2	8303551	2	HEX HD CAPSCREW, M10X16, GR8.8	
3	8310621	6	FENDER WASHER, 10X30mm	
4	1001100849	1	ROUND MUFFLER	
5	8526007	AR	LOCTITE 242, (apply to items 2 & 10)	
6	8275240	1	V BAND CLAMP	
7	4340962	1	EXHAUST SUPPORT	
8	3460407	1	EXHAUST PIPE	
9	8275247	1	3IN MUFFLER CLAMP	
10	8303798	4	HEX HD CAPSCREW, M10X25, GR8.8	
11	83681331	1	FLEX TUBING	
12	91403601	2	PIPE CLAMP	
13	7301165	1	MUFFLER BRACKET	
14	8305038	2	HEX NUT, M10X1.5	
15	5201012	2	RIPP BOLT, M10X25	
16	5221000	2	RIPP NUT, 10mm	
17	1001100044	1	EXHAUST TAILPIPE	
K1	2915032	1	RETRO FIT KIT, (includes items 1, 7, 8, 9, 11, 12, 15 & 16)	
K2	1001100045	1	EXHAUST TAILPIPE KIT, (includes item 17)	

FIGURE 4-16. EXHAUST INSTALLATION (644E SN 0160048717 to Present, Including 01600405421; 944E SN 0160041827 to Present)

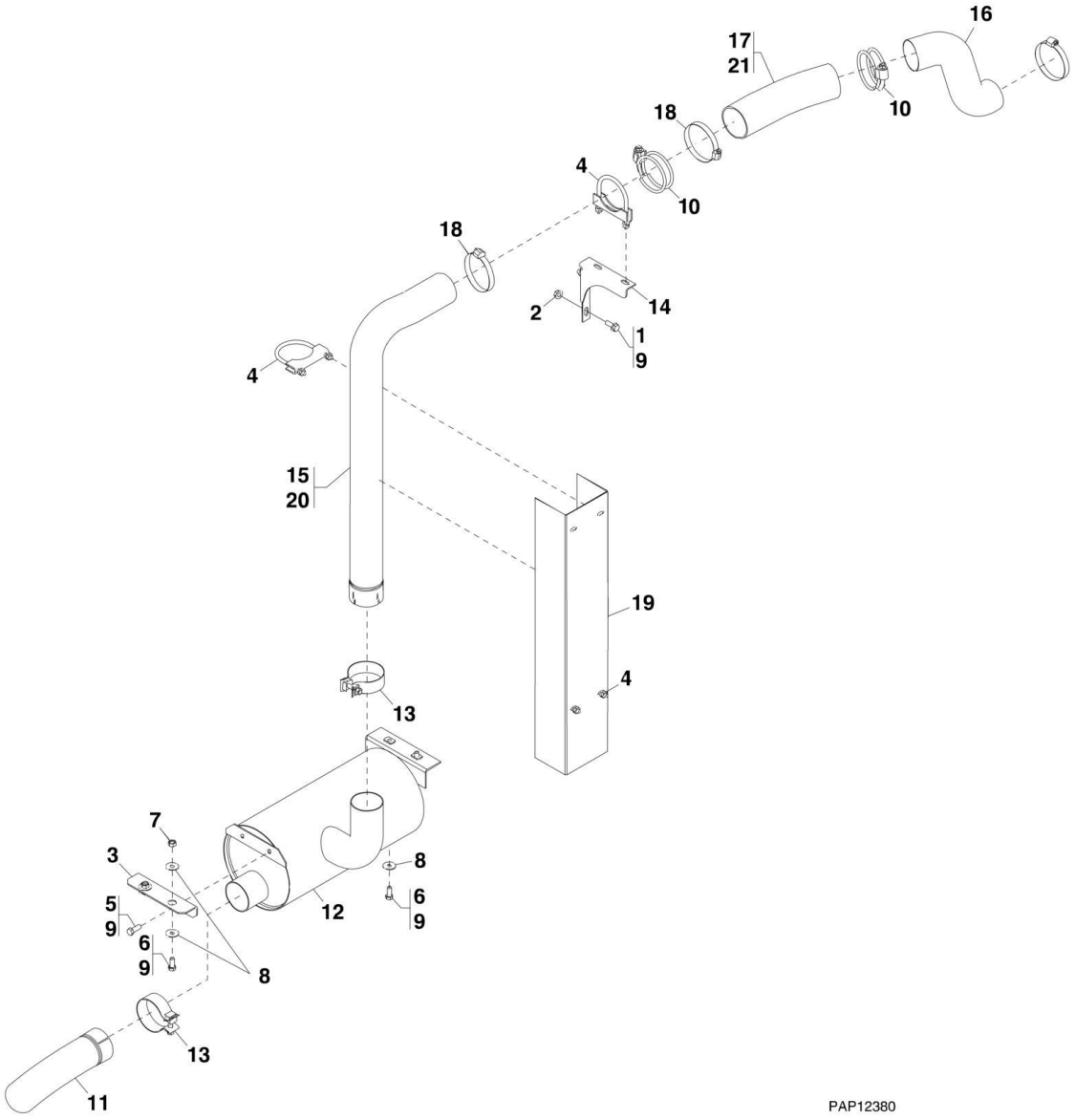

FIGURE 4-16. EXHAUST INSTALLATION (644E SN 0160048717 to Present, Including 01600405421; 944E SN 0160041827 to Present)

ITEM	PART NUMBER	QTY	DESCRIPTION	REV
	1001112327	Ref	EXHAUST INSTALLATION, (not available to order, see items 1 thru 21 for service)	C
1	5201012	2	RIPP BOLT, M10X25, (torque to 45-60 lb-ft/61-81 lb-ft)	
2	5221000	2	RIPP NUT, 10mm	
3	7301165	1	MUFFLER BRACKET	
4	8275247	3	3IN HEAVY DUTY CLAMP	
5	8303551	2	HEX HD CAPSCREW, M10X16, GR8.8, (torque to 45-60 lb-ft/61-81 lb-ft)	
6	8303798	4	HEX HD CAPSCREW, M10X25, GR8.8, (torque to 45-60 lb-ft/61-81 lb-ft)	
7	8305038	2	HEX NUT, M10X1.5	
8	8310621	6	WASHER, 10mm	
9	8526007	AR	LOCTITE 242	
10	91403601	2	PIPE CLAMP	
11	1001100044	1	EXHAUST TAILPIPE	
12	1001100849	1	ROUND MUFFLER	
13	1001107559	2	MUFFLER CLAMP	
14	1001112328	1	EXHAUST SUPPORT	
15	1001112329	1	EXHAUST PIPE	
16	1001112330	1	EXHAUST PIPE	
17	1001114940	1	EXHAUST TUBE	
18	8410011	4	GEAR CLAMP, 3.25IN	
19	1001120988	1	EXHAUST COVER	
20	1001132367	1	THERMAL INSULATION	
21	1001132368	1	THERMAL INSULATION	

SECTION 5 - DRIVE TRAIN

FIGURE 5-1. DRIVE TRAIN COMPONENTS

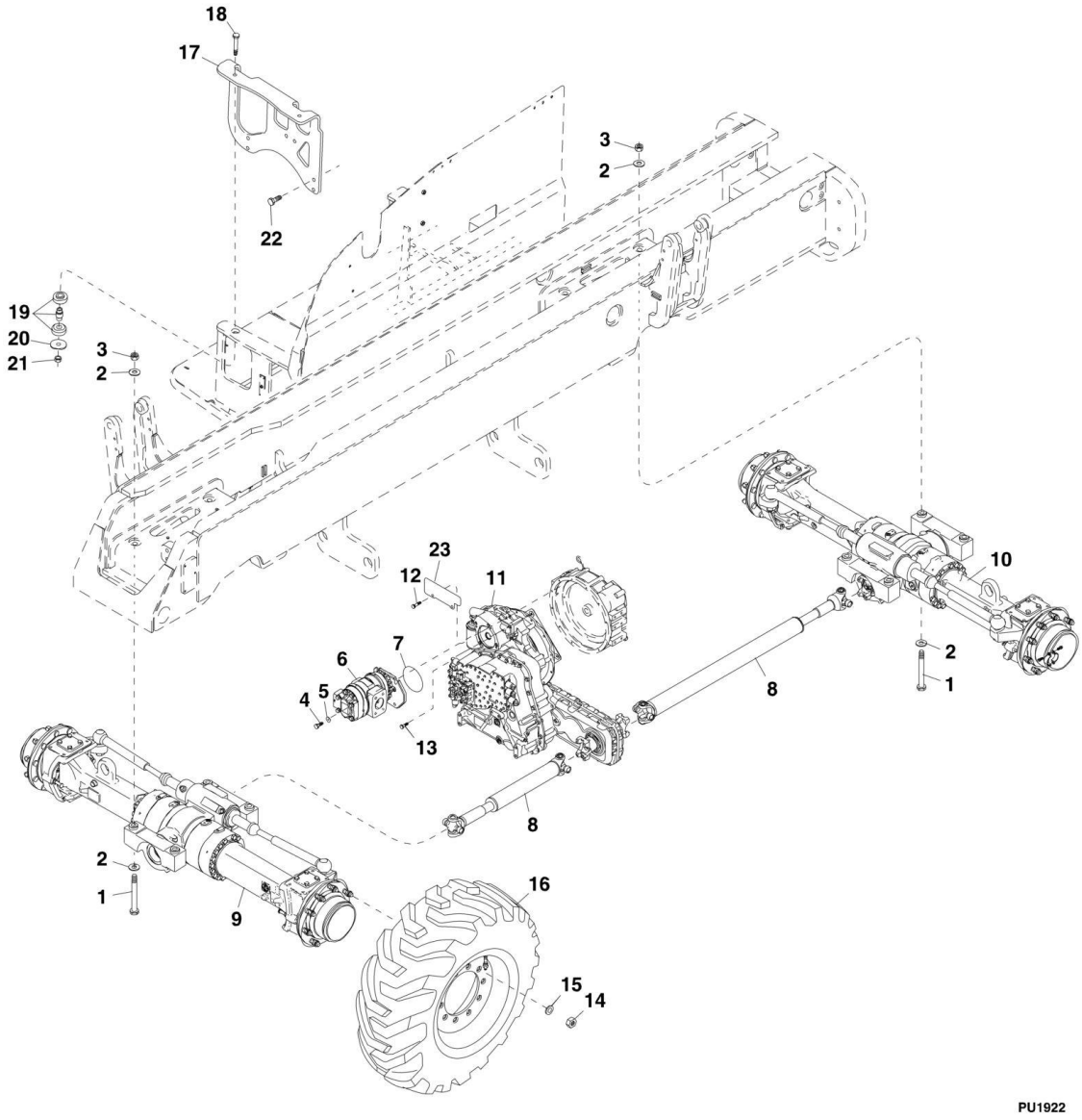

FIGURE 5-1. DRIVE TRAIN COMPONENTS

ITEM	PART NUMBER	QTY	DESCRIPTION	REV
1	8310671	8	HEX HD CAPSCREW, M24X340, GR10.9, (torque to 500-575 lb-ft/677-780 Nm)	
2	8310061	16	WASHER, 1	
3	8310672	8	HEX LOCKNUT, M24X3	
4	8303790	4	HEX HD CAPSCREW, M12x30, GR8.8, (torque to 69-78 lb-ft/94-105 Nm)	
5	8307220	4	WASHER, 12mm	
6		Ref	GEAR PUMP, (See HYDRAULIC COMPONENTS SECTION for Breakdown)	
7	8630019	1	O-RING	
8		Ref	DRIVESHAFTS, (See DRIVE SHAFTS for Breakdown)	
9		Ref	FRONT AXLE, (See FRONT AXLE for Breakdown)	
10		Ref	REAR AXLE, (See REAR AXLE for Breakdown)	
11		Ref	ZF TRANSMISSION, (See ZF TRANSMISSION for Breakdown)	
12	8303769	12	HEX HD CAPSCREW, M10X45mm, GR8.8	
13	8303798	4	HEX HD CAPSCREW, M10X25mm, GR8.8	
14	8786572	32	WHEEL NUT, (torque to 425-450 lb-ft/576-610 Nm) **(644E Prior to SN 0160039830, Excluding 0160036724, 0160036811, 0160036907 and 0160037012; 944E Prior to SN 0160040124, Excluding 0160034634, 0160036710, 0160036722, 0160036735 and 0160036738)**	
14	8786572	40	WHEEL NUT, (torque to 425-450 lb-ft/576-610 Nm) **(644E SN 0160039830 to Present, Including 0160036724, 0160036811, 0160036907 and 0160037012; 944E SN 0160040124 to Present, Including 0160034634, 0160036710, 0160036722, 0160036735 and 0160036738)**	
14	91403193	40	WHEEL NUT, (if equipped with Firestone 370/75-28), (torque to 430-470 lb-ft/583-637 Nm) **(644E SN 0160039830 to Present, Including 0160036724, 0160036811, 0160036907 and 0160037012; 944E SN 0160040124 to Present, Including 0160034634, 0160036710, 0160036722, 0160036735 and 0160036738)**	
15	8786573	32	SPRING WASHER **(644E Prior to SN 0160039830, Excluding 0160036724, 0160036811, 0160036907 and 0160037012; 944E Prior to SN 0160040124, Excluding 0160034634, 0160036710, 0160036722, 0160036735 and 0160036738)**	
15	8786573	40	SPRING WASHER, (not required with Firestone 370/75-28) **(644E SN 0160039830 to Present, Including 0160036724, 0160036811, 0160036907 and 0160037012; 944E SN 0160040124 to Present, Including 0160034634, 0160036710, 0160036722, 0160036735 and 0160036738)**	
16		Ref	TIRE AND RIM ASSY, (See TIRE AND RIMS for Breakdown)	
17	7300445	1	TRANSMISSION MOUNTING PLATE	
18	8310288	2	HEX HD CAPSCREW, 5/8-11X3-3/4, GR8	
19	8278040	2	ENGINE ISOLATOR	
20	7300435	2	REBOUND WASHER	
21	8305643	2	HEX LOCKNUT, 3/4-11	
22	8310379	6	HEX HD CAPSCREW, M16X45, GR10.9	
23	3576011	1	MOUNTING PLATE **(644E SN 0160012410 to Present; 944E SN 0160012745 to Present)**	

FIGURE 5-2. FRONT AXLE

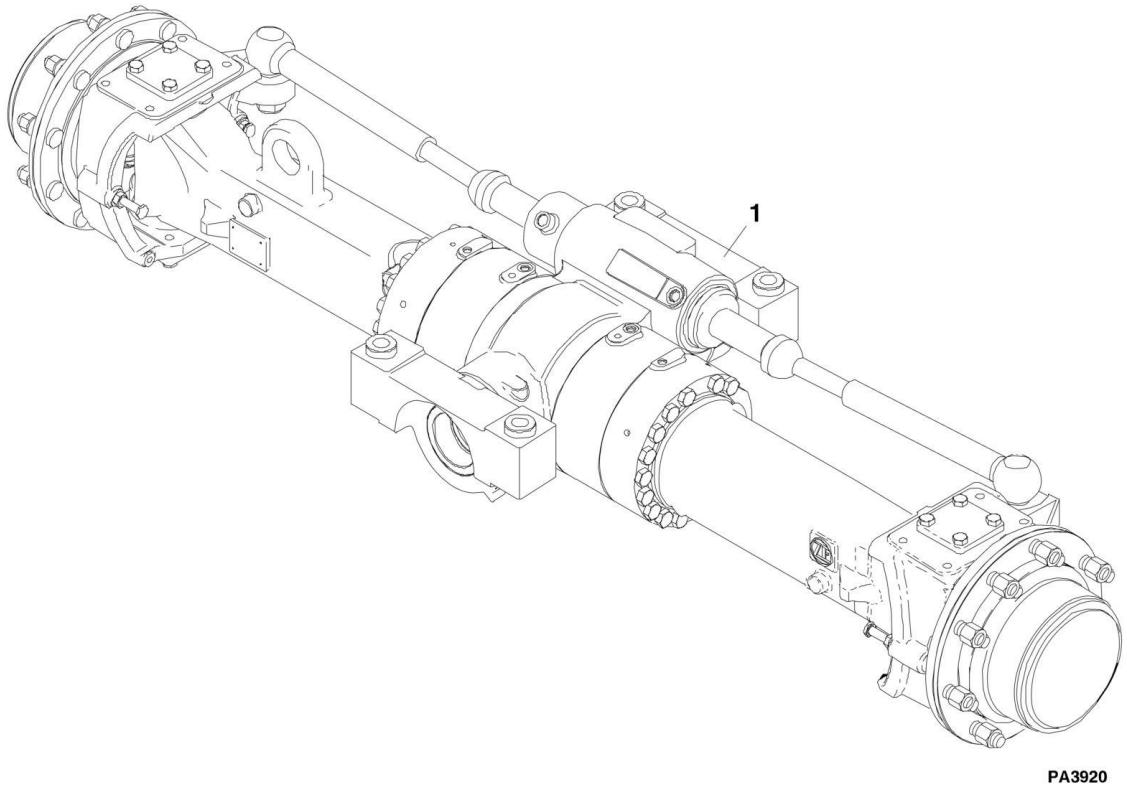

FIGURE 5-2. FRONT AXLE

ITEM	PART NUMBER	QTY	DESCRIPTION	REV
1	8040283	1	FRONT AXLE, (644E) **(Prior to SN 0160039830, Excluding 0160036724, 0160036811, 0160036907 and 0160037012)**	B
1	1001103626	1	FRONT AXLE, (644E) **(SN 0160039830 to Present, Including 0160036724, 0160036811, 0160036907 and 0160037012)**	D
1	8040286	1	FRONT AXLE, (944E) **(Prior to SN 0160040124, Excluding 0160034634, 0160036710, 0160036722, 0160036735 and 0160036738)**	B
1	1001103627	1	FRONT AXLE, (944E) **(SN 0160040124 to Present, Including 0160034634, 0160036710, 0160036722, 0160036735 and 0160036738)**	D
1		Ref	INPUT, (See FRONT AXLE – INPUT for Breakdown)	
1		Ref	LIMITED SLIP DIFFERENTIAL, (See FRONT AXLE - LIMITED SLIP DIFFERENTIAL for Breakdown)	
1		Ref	AXLE CASING, (See FRONT AXLE – CASING for Breakdown)	
1		Ref	M-DISC BRAKE, (See FRONT AXLE - M-DISC BRAKE for Breakdown)	
1		Ref	BRAKE, (See FRONT AXLE – BRAKE for Breakdown)	
1		Ref	JOINT HOUSING, (See FRONT AXLE - JOINT HOUSING for Breakdown)	
1		Ref	PLANETARY DRIVE, (See FRONT AXLE - PLANETARY DRIVE for Breakdown)	

FIGURE 5-3. FRONT AXLE - INPUT (Prior to SN 0160039830, Excluding 0160036724, 0160036811, 0160036907 and 0160037012)

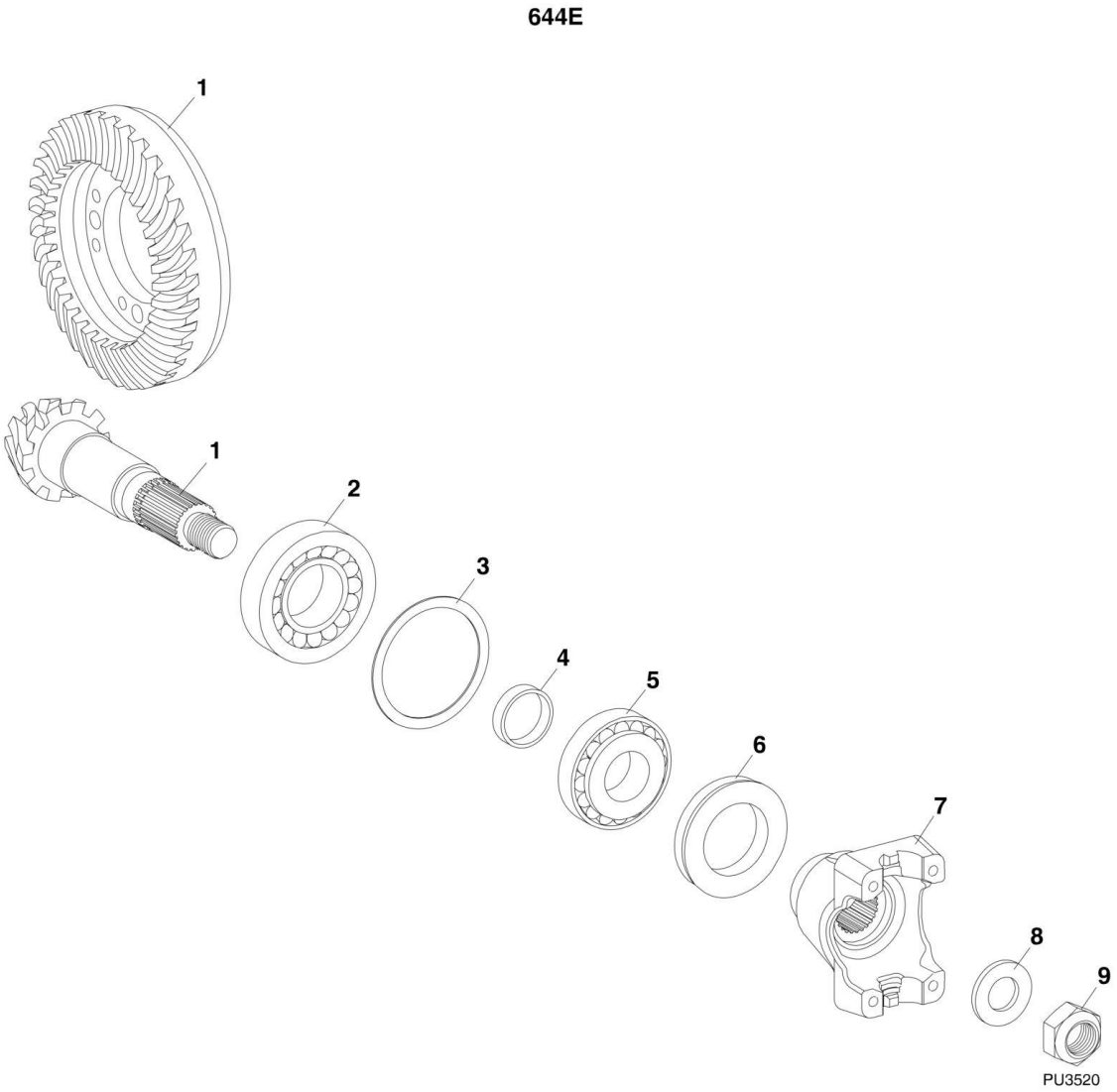

FIGURE 5-3. FRONT AXLE - INPUT (Prior to SN 0160039830, Excluding 0160036724, 0160036811, 0160036907 and 0160037012)

ITEM	PART NUMBER	QTY	DESCRIPTION	REV
1	7027229	1	BEVEL GEAR SET	
2	1319353	1	ROLLER BEARING	
3	1319333	AR	SHIM, 1.0mm	
3	1319334	AR	SHIM, 1.05mm	
3	1319335	AR	SHIM, 1.1mm	
3	1319336	AR	SHIM, 1.15mm	
3	1319337	AR	SHIM, 1.2mm	
3	1319338	AR	SHIM, 1.25mm	
3	1319339	AR	SHIM, 1.3mm	
3	1319340	AR	SHIM, 1.35mm	
3	1319341	AR	SHIM, 1.4mm	
3	1319342	AR	SHIM, 1.45mm	
3	1319343	AR	SHIM, 1.5mm	
3	1319344	AR	SHIM, 1.55mm	
3	1319345	AR	SHIM, 1.6mm	
3	1319346	AR	SHIM, 0.9mm	
3	1319347	AR	SHIM, 0.95mm	
3	1319348	AR	SHIM, 0.65mm	
3	1319349	AR	SHIM, 0.70mm	
3	1319350	AR	SHIM, 0.75mm	
3	1319351	AR	SHIM, 0.85mm	
3	1319352	AR	SHIM, 0.80mm	
4	1319354	AR	RING, 15.1mm	
4	1319355	AR	RING, 15.2mm	
4	1319356	AR	RING, 15.3mm	
4	1319357	AR	RING, 15.4mm	
4	1319358	AR	RING, 15.5mm	
4	1319359	AR	RING, 15.6mm	
4	1319360	AR	RING, 15.7mm	
4	1319361	AR	RING, 15.8mm	
4	1319362	AR	RING, 15.9mm	
4	1319363	AR	RING, 16.0mm	
4	1319364	AR	RING, 16.1mm	
4	1319365	AR	RING, 16.2mm	
4	1319366	AR	RING, 16.3mm	
4	1319367	AR	RING, 16.4mm	
4	8035982	AR	RING, 16.26mm	
4	1319369	AR	RING, 16.23mm	
4	1319370	AR	RING, 16.16mm	
4	1319371	AR	RING, 16.13mm	
4	1319372	AR	RING, 16.06mm	
4	1319373	AR	RING, 16.03mm	
4	1319374	AR	RING, 15.96mm	
4	1319375	AR	RING, 15.93mm	
4	1319376	AR	RING, 15.86mm	
4	1319377	AR	RING, 15.83mm	
4	1319378	AR	RING, 15.76mm	
4	1319379	AR	RING, 15.73mm	
4	1319380	AR	RING, 15.66mm	

ITEM	PART NUMBER	QTY	DESCRIPTION	REV
4	1319381	AR	RING, 15.63mm	
4	1319382	AR	RING, 15.56mm	
4	1319383	AR	RING, 15.53mm	
4	1319384	AR	RING, 15.46mm	
4	1319385	AR	RING, 15.43mm	
4	1319386	AR	RING, 15.36mm	
4	1319388	AR	RING, 15.26mm	
4	1319389	AR	RING, 15.38mm	
4	1319390	AR	RING, 15.48mm	
4	1319391	AR	RING, 15.58mm	
4	1319392	AR	RING, 15.68mm	
4	1319393	AR	RING, 15.69mm	
4	1319394	AR	RING, 15.72mm	
4	1319395	AR	RING, 15.78mm	
4	1319396	AR	RING, 15.81mm	
4	1319397	AR	RING, 15.84mm	
4	1319398	AR	RING, 15.88mm	
4	1319399	AR	RING, 15.89mm	
4	1319400	AR	RING, 15.91mm	
4	1319401	AR	RING, 15.94mm	
4	1319402	AR	RING, 15.97mm	
5	1319444	1	ROLLER BEARING	
6	1321211	1	MULTI SEAL RING	
7	1321237	1	END YOKE	
8	1319406	1	WASHER	
9	8035983	1	HEX NUT	

FIGURE 5-4. FRONT AXLE - INPUT (SN 0160039830 to Present, Including 0160036724, 0160036811, 0160036907 and 0160037012)

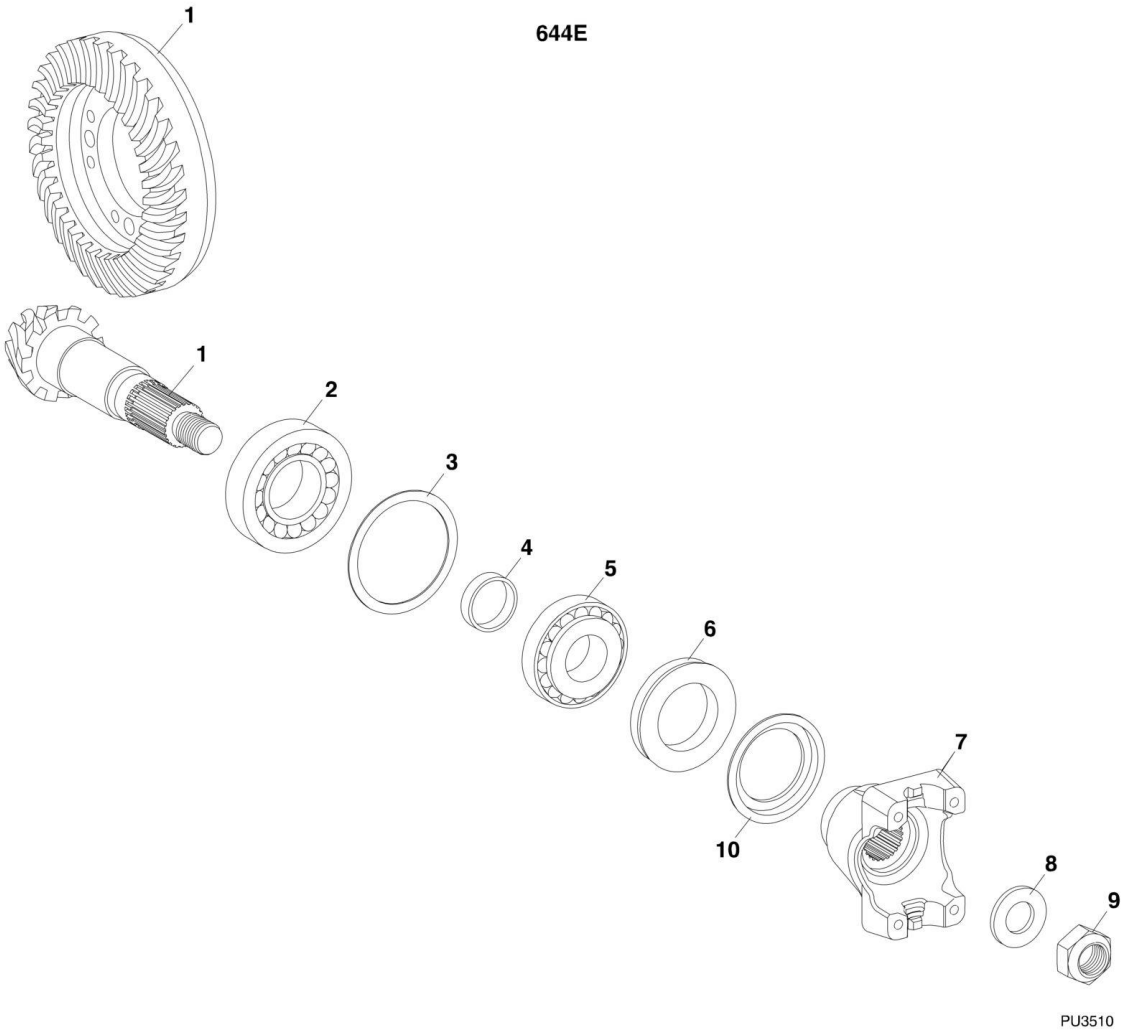

FIGURE 5-4. FRONT AXLE - INPUT (SN 0160039830 to Present, Including 0160036724, 0160036811, 0160036907 and 0160037012)

ITEM	PART NUMBER	QTY	DESCRIPTION	REV
1	70022232	1	BEVEL GEAR SET	
2	70023400	1	ROLLER BEARING	
3	80304160	1	SHIM, 0.1mm	
3	80304159	1	SHIM, 0.2mm	
3	80304158	1	SHIM, 0.3mm	
3	80304157	1	SHIM, 0.5mm	
3	80304156	1	SHIM, 0.6mm	
3	80304162	1	SHIM, 0.65mm	
3	80304155	1	SHIM, 0.7mm	
3	80304161	1	SHIM, 0.75mm	
3	80304154	1	SHIM, 0.8mm	
3	80304153	1	SHIM, 0.9mm	
3	80304152	1	SHIM, 1.0mm	
3	80304146	1	SHIM, 1.2mm	
3	80304163	1	SHIM, 1.25mm	
3	80304151	1	SHIM, 1.3mm	
3	80304164	1	SHIM, 1.35mm	
3	80304150	1	SHIM, 1.4mm	
3	80304165	1	SHIM, 1.45mm	
3	80304145	1	SHIM, 1.5mm	
3	80304166	1	SHIM, 1.55mm	
3	80304149	1	SHIM, 1.6mm	
3	80304167	1	SHIM, 1.65mm	
3	80304148	1	SHIM, 1.7mm	
3	80304168	1	SHIM, 1.75mm	
3	80304144	1	SHIM, 1.8mm	
3	80304169	1	SHIM, 1.85mm	
3	80304147	1	SHIM, 1.9mm	
3	80304143	1	SHIM, 2.0mm	
4	80304088	1	RING, 16.0mm	
4	80304089	1	RING, 16.1mm	
4	80304090	1	RING, 16.2mm	
4	80304091	1	RING, 16.3mm	
4	80304092	1	RING, 16.4mm	
4	80304093	1	RING, 16.5mm	
4	80304110	1	RING, 16.56mm	
4	80304094	1	RING, 16.6mm	
4	80304111	1	RING, 16.62mm	
4	80304112	1	RING, 16.64mm	
4	80304124	1	RING, 16.66mm	
4	80304113	1	RING, 16.68mm	
4	80304095	1	RING, 16.7mm	
4	70022216	1	RING, 16.72mm	
4	80304115	1	RING, 16.74mm	
4	80304117	1	RING, 16.76mm	
4	80304118	1	RING, 16.78mm	
4	80304096	1	RING, 16.8mm	
4	80304119	1	RING, 16.82mm	
4	80304120	1	RING, 16.84mm	

ITEM	PART NUMBER	QTY	DESCRIPTION	REV
4	80304104	1	RING, 16.86mm	
4	80304121	1	RING, 16.88mm	
4	80304122	1	RING, 16.9mm	
4	80304097	1	RING, 16.92mm	
4	80304123	1	RING, 16.94mm	
4	80304125	1	RING, 16.96mm	
4	80304107	1	RING, 16.98mm	
4	80304126	1	RING, 17.0mm	
4	80304127	1	RING, 17.02mm	
4	80304108	1	RING, 17.04mm	
4	80304128	1	RING, 17.06mm	
4	80304129	1	RING, 17.08mm	
4	80304099	1	RING, 17.10mm	
4	80304130	1	RING, 17.12mm	
4	80304131	1	RING, 17.14mm	
4	80304132	1	RING, 17.16mm	
4	80304133	1	RING, 17.18mm	
4	80304100	1	RING, 17.2mm	
4	80304134	1	RING, 17.22mm	
4	80304135	1	RING, 17.24mm	
4	80304136	1	RING, 17.26mm	
4	80304137	1	RING, 17.28mm	
4	80304101	1	RING, 17.3mm	
4	80304102	1	RING, 17.4mm	
5	1319353	1	ROLLER BEARING	
6	70022220	1	SHAFT SEAL	
7	70022245	1	END YOKE	
8	80304082	1	WASHER	
9	70022213	1	HEX NUT	
10	70022244	1	SCREEN SHEET	

FIGURE 5-5. FRONT AXLE - INPUT (Prior to SN 0160040124, Excluding 0160034634, 0160036710, 0160036722, 0160036735 and 0160036738)

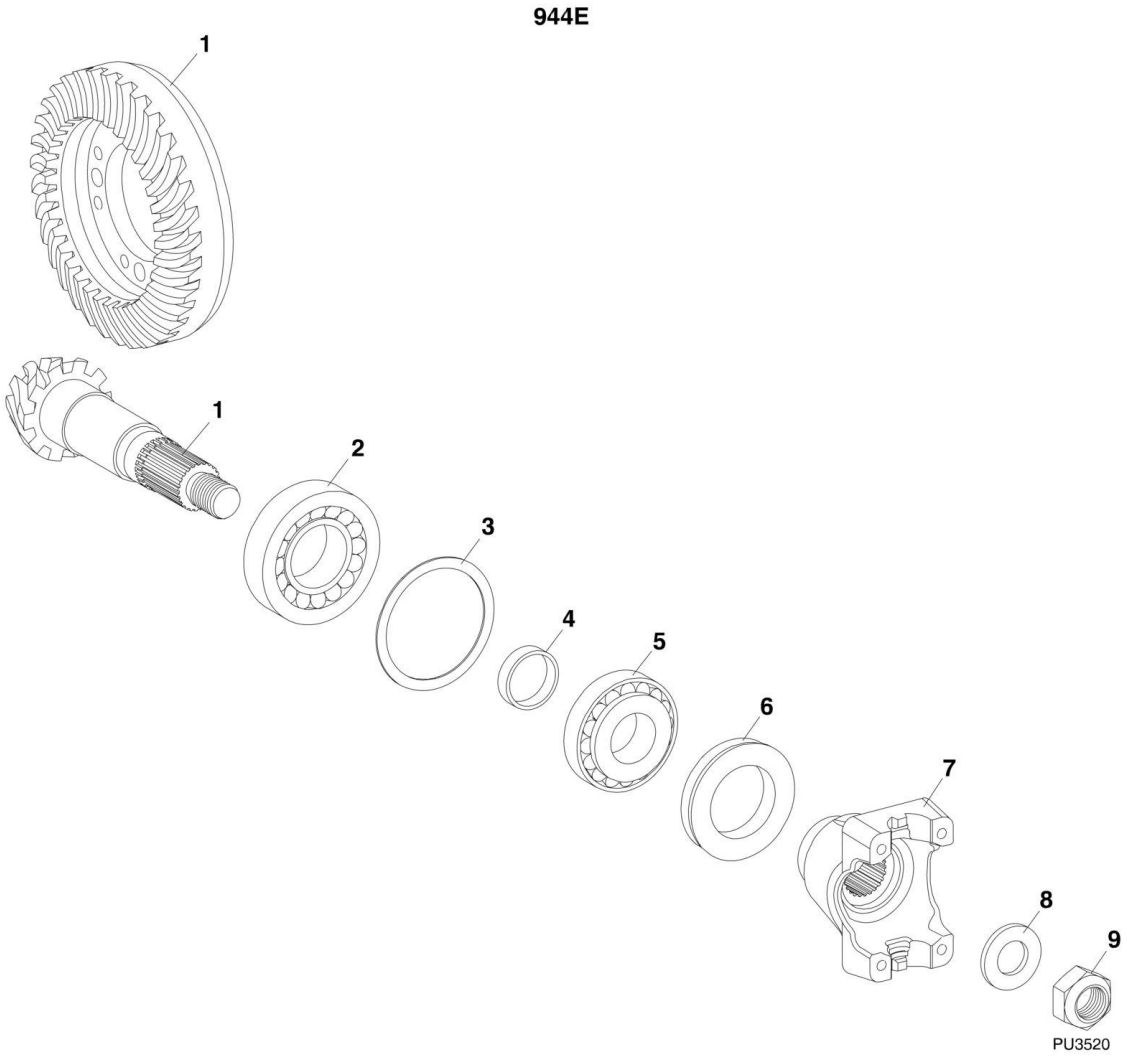

FIGURE 5-5. FRONT AXLE - INPUT (Prior to SN 0160040124, Excluding 0160034634, 0160036710, 0160036722, 0160036735 and 0160036738)

ITEM	PART NUMBER	QTY	DESCRIPTION	REV
1	1321230	1	BEVEL GEAR SET	
2	1321213	1	ROLLER BEARING	
3	1321187	AR	SHIM, 1.5mm	
3	8035871	AR	SHIM, 0.9mm	
3	8035872	AR	SHIM, 0.95mm	
3	8035873	AR	SHIM, 1.0mm	
3	1321186	AR	SHIM, 1.05mm	
3	8035874	AR	SHIM, 1.1mm	
3	8035875	AR	SHIM, 1.15mm	
3	1321185	AR	SHIM, 1.2mm	
3	8035876	AR	SHIM, 1.25mm	
3	8035877	AR	SHIM, 1.3mm	
3	1321189	AR	SHIM, 0.7mm	
3	8035878	AR	SHIM, 1.75mm	
3	8035879	AR	SHIM, 0.8mm	
3	1321190	AR	SHIM, 0.85mm	
4	8035881	1	RING, 11.30mm	
4	8035882	1	RING, 11.33mm	
4	8035883	1	RING, 11.36mm	
4	8035884	1	RING, 11.39mm	
4	8035885	1	RING, 11.42mm	
4	8035886	1	RING, 11.45mm	
4	1321196	1	RING, 11.48mm	
4	8035887	1	RING, 11.51mm	
4	8035888	1	RING, 11.54mm	
4	8035889	1	RING, 11.57mm	
4	8035890	1	RING, 11.60mm	
4	8035891	1	RING, 11.63mm	
4	1321197	1	RING, 11.66mm	
4	8035892	1	RING, 11.69mm	
4	8035893	1	RING, 11.72mm	
4	8035894	1	RING, 11.75mm	
4	8035895	1	RING, 11.78mm	
4	8035896	1	RING, 11.81mm	
4	1321198	1	RING, 11.84mm	
4	8035897	1	RING, 11.87mm	
4	8035898	1	RING, 11.90mm	
4	8035899	1	RING, 11.93mm	
4	8035900	1	RING, 11.96mm	
4	8035901	1	RING, 11.99mm	
4	8035902	1	RING, 12.02mm	
4	1321199	1	RING, 12.05mm	
4	8035903	1	RING, 12.08mm	
4	8035904	1	RING, 12.11mm	
4	8035905	1	RING, 12.14mm	
4	8035906	1	RING, 12.17mm	
4	8036841	1	RING, 12.20mm	
4	8035907	1	RING, 12.23mm	
4	8035908	1	RING, 12.26mm	

ITEM	PART NUMBER	QTY	DESCRIPTION	REV
4	8035909	1	RING, 12.29mm	
4	8035910	1	RING, 12.32mm	
4	8035911	1	RING, 12.35mm	
4	1321201	1	RING, 12.38mm	
4	8035912	1	RING, 11.27mm	
4	1321204	1	RING, 11.24mm	
4	8035913	1	RING, 11.21mm	
4	8035914	1	RING, 11.18mm	
4	8035915	1	RING, 11.15mm	
4	8035916	1	RING, 11.12mm	
4	1321203	1	RING, 11.09mm	
4	8035917	1	RING, 11.06mm	
4	8035918	1	RING, 11.03mm	
4	8035919	1	RING, 11.00mm	
4	8035920	1	RING, 10.97mm	
4	1321202	1	RING, 10.94mm	
5	1321212	1	ROLLER BEARING	
6	1321210	1	COMBINATION RING	
7	1321248	1	END YOKE	
8	1321194	1	WASHER	
9	8035921	1	HEX NUT	

FIGURE 5-6. FRONT AXLE - INPUT (SN 0160040124 to Present, Including 0160034634, 0160036710, 0160036722, 0160036735 and 0160036738)

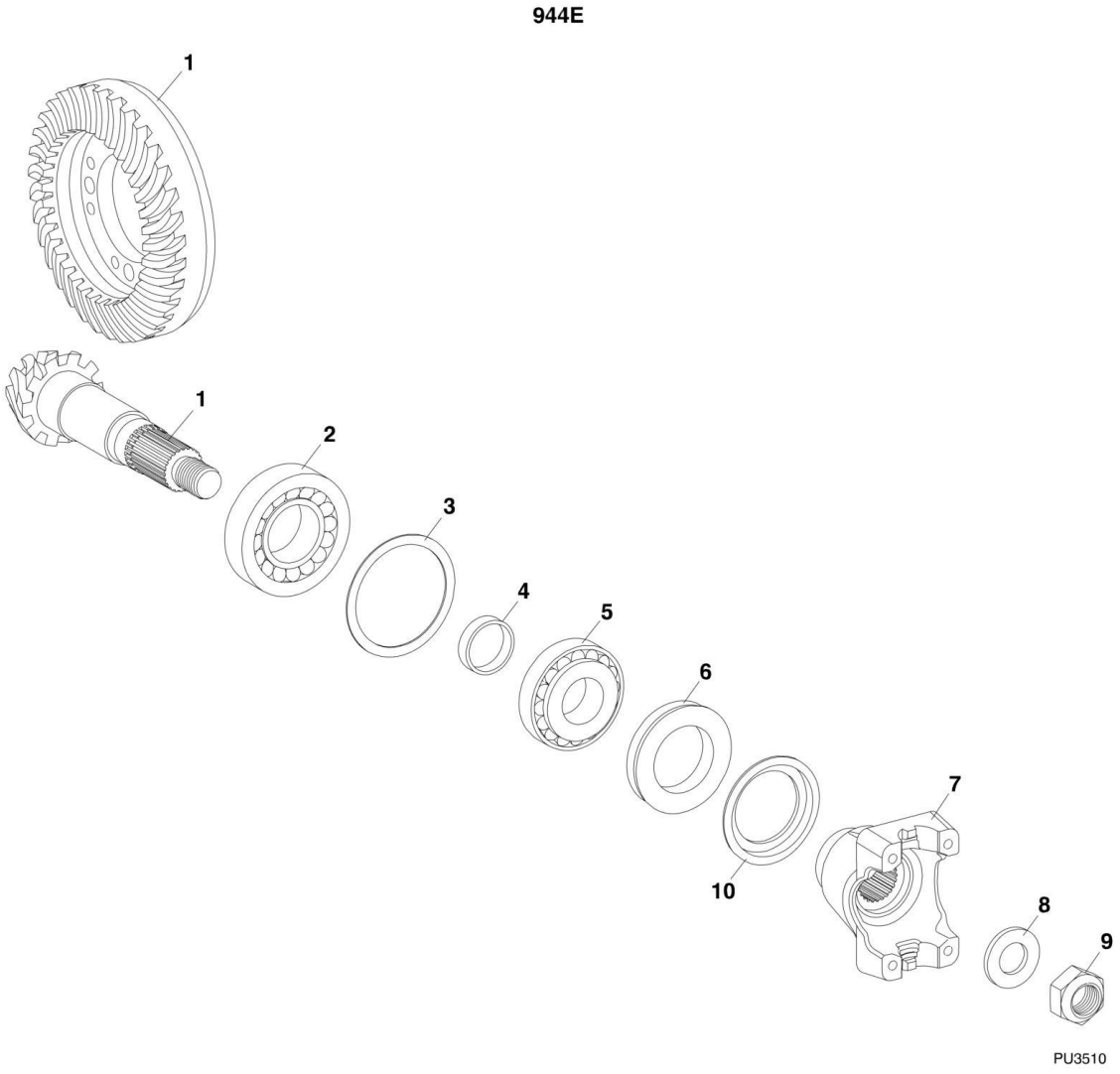

FIGURE 5-6. FRONT AXLE - INPUT (SN 0160040124 to Present, Including 0160034634, 0160036710, 0160036722, 0160036735 and 0160036738)

ITEM	PART NUMBER	QTY	DESCRIPTION	REV
1	70022272	1	BEVEL GEAR SET	
2	170023400	1	ROLLER BEARING	
3	80304160	1	SHIM, S=0.1	
3	80304159	1	SHIM, S=0.2	
3	80304158	1	SHIM, S=0.3	
3	80304157	1	SHIM, S=0.5	
3	80304156	1	SHIM, S=0.6	
3	80304162	1	SHIM, S=0.65	
3	80304155	1	SHIM, S=0.7	
3	80304161	1	SHIM, S=0.75	
3	80304154	1	SHIM, S=0.8	
3	80304153	1	SHIM, S=0.9	
3	80304152	1	SHIM, S=1.0	
3	80304146	1	SHIM, S=1.2	
3	80304163	1	SHIM, S=1.25	
3	80304151	1	SHIM, S=1.3	
3	80304164	1	SHIM, S=1.35	
3	80304150	1	SHIM, S=1.4	
3	80304165	1	SHIM, S=1.45	
3	80304145	1	SHIM, S=1.5	
3	80304166	1	SHIM, S=1.55	
3	80304149	1	SHIM, S=1.6	
3	80304167	1	SHIM, S=1.65	
3	80304148	1	SHIM, S=1.7	
3	80304168	1	SHIM, S=1.75	
3	80304144	1	SHIM, S=1.8	
3	80304169	1	SHIM, S=1.85	
3	80304147	1	SHIM, S=1.9	
3	80304143	1	SHIM, S=2.0	
4	80304088	1	RING, S=16.0	
4	80304089	1	RING, S=16.1	
4	80304090	1	RING, S=16.2	
4	80304091	1	RING, S=16.3	
4	80304092	1	RING, S=16.4	
4	80304093	1	RING, S=16.5	
4	80304110	1	RING, S=16.56	
4	80304094	1	RING, S=16.6	
4	80304111	1	RING, S=16.62	
4	80304112	1	RING, S=16.64	
4	80304124	1	RING, S=16.66	
4	80304113	1	RING, S=16.68	
4	80304095	1	RING, S=16.7	
4	70022216	1	RING, S=16.72	
4	80304115	1	RING, S=16.74	
4	80304117	1	RING, S=16.76	
4	80304118	1	RING, S=16.78	
4	80304096	1	RING, S=16.8	
4	80304119	1	RING, S=16.82	
4	80304120	1	RING, S=16.84	

ITEM	PART NUMBER	QTY	DESCRIPTION	REV
4	80304104	1	RING, S=16.86	
4	80304121	1	RING, S=16.88	
4	80304122	1	RING, S=16.9	
4	80304097	1	RING, S=16.92	
4	80304123	1	RING, S=16.94	
4	80304125	1	RING, S=16.96	
4	80304107	1	RING, S=16.98	
4	80304126	1	RING, S=17.0	
4	80304127	1	RING, S=17.02	
4	80304108	1	RING, S=17.04	
4	80304128	1	RING, S=17.06	
4	80304129	1	RING, S=17.08	
4	80304099	1	RING, S=17.10	
4	80304130	1	RING, S=17.12	
4	80304131	1	RING, S=17.14	
4	80304132	1	RING, S=17.16	
4	80304133	1	RING, S=17.18	
4	80304100	1	RING, S=17.2	
4	80304134	1	RING, S=17.22	
4	80304135	1	RING, S=17.24	
4	80304136	1	RING, S=17.26	
4	80304137	1	RING, S=17.28	
4	80304101	1	RING, S=17.3	
4	80304102	1	RING, S=17.4	
5	1319353	1	ROLLER BEARING	
6	70022220	1	SHAFT SEAL	
7	70022245	1	END YOKE	
8	80304082	1	WASHER	
9	70022213	1	HEX NUT	
10	70022244	1	SCREEN SHEET	

FIGURE 5-7. FRONT AXLE - LIMITED SLIP DIFFERENTIAL (644E Prior to SN 0160039830, Excluding 0160036724, 0160036811, 0160036907 and 0160037012; 944E Prior to SN 0160040124, Excluding 0160034634, 0160036710, 0160036722, 0160036735 and 0160036738)

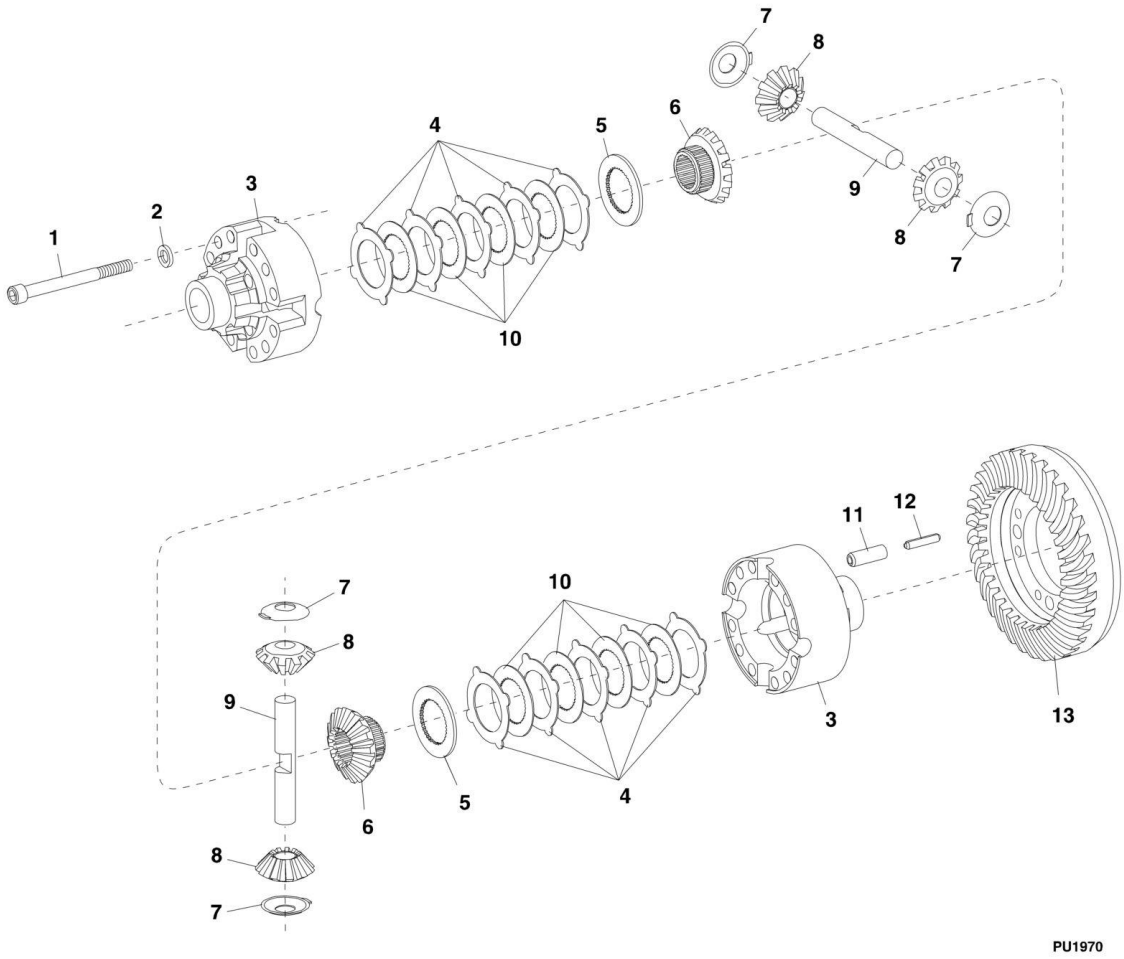

FIGURE 5-7. FRONT AXLE - LIMITED SLIP DIFFERENTIAL (644E Prior to SN 0160039830, Excluding 0160036724, 0160036811, 0160036907 and 0160037012; 944E Prior to SN 0160040124, Excluding 0160034634, 0160036710, 0160036722, 0160036735 and 0160036738)

ITEM	PART NUMBER	QTY	DESCRIPTION	REV
	7027230	1	LIMITED SLIP DIFFERENTIAL ASSY, (includes items 1 thru 12)	
1	8035923	12	CAPSCREW	
2	1321184	12	WASHER	
3	1321215	1	DIFFERENTIAL CASE	
4	1321219	10	O. CLUTCH DISC, 1.2mm	
4	1321220	10	O. CLUTCH DISC, 1.3mm	
4	1321221	10	O. CLUTCH DISC, 1.4mm	
5	1321217	2	PRESSURE DISC	
6	7027225	2	AXLE BEVEL GEAR	
7	1319415	4	THRUST WASHER	
8	8036753	4	DIFFERENTIAL BEVEL GEAR	
9	1321225	2	DIFFERENTIAL AXLE	
10	1321218	8	I. CLUTCH DISC	
11	1321153	4	SLOTTED PIN	
12	1321154	4	SLOTTED PIN	
13		Ref	GEAR SET BEVEL, (See FRONT AXLE – INPUT for Breakdown)	

FIGURE 5-8. FRONT AXLE - LIMITED SLIP DIFFERENTIAL (644E SN 0160039830 to Present, Including 0160036724, 0160036811, 0160036907 and 0160037012; 944E SN 0160040124 to Present, Including 0160034634, 0160036710, 0160036722, 0160036735 and 0160036738)

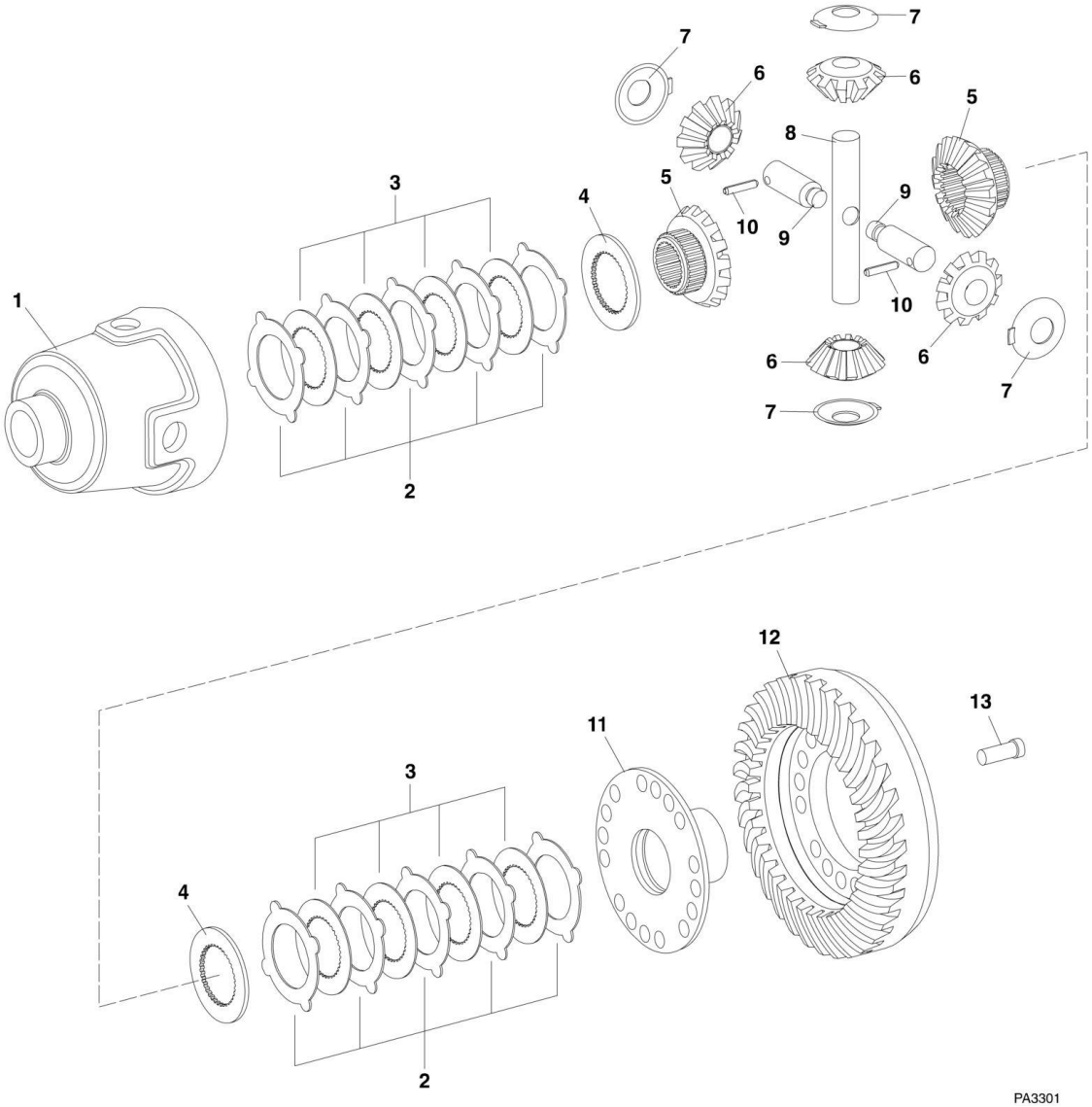

FIGURE 5-8. FRONT AXLE - LIMITED SLIP DIFFERENTIAL (644E SN 0160039830 to Present, Including 0160036724, 0160036811, 0160036907 and 0160037012; 944E SN 0160040124 to Present, Including 0160034634, 0160036710, 0160036722, 0160036735 and 0160036738)

ITEM	PART NUMBER	QTY	DESCRIPTION	REV
1	70022226	1	DIFFERENTIAL CASE	
2	70022263	AR	O.CLUTCH DISC, A=1.2	
2	70022264	AR	O.CLUTCH DISC, A=1.3	
3	70022260	8	I.CLUTCH DISC	
4	70022261	2	PRESSURE DISC	
5	70022225	2	AXLE BEVEL GEAR	
6	70022185	4	DIFFERENTIAL BEVEL GEAR	
7	70022262	4	THRUST WASHER	
8	70022227	1	DIFFERENTIAL AXLE	
9	70022228	2	DIFFERENTIAL AXLE	
10	70022200	2	SLOTTED PIN	
11	70022229	1	COVER	
12		Ref	CROWN WHEEL, (See FRONT AXLE – INPUT for Breakdown)	
13	70022211	16	CAP SCREW, M12X1.5X35	

FIGURE 5-9. FRONT AXLE - AXLE CASING (644E Prior to SN 0160039830, Excluding 0160036724, 0160036811, 0160036907 and 0160037012; 944E Prior to SN 0160040124, Excluding 0160034634, 0160036710, 0160036722, 0160036735 and 0160036738)

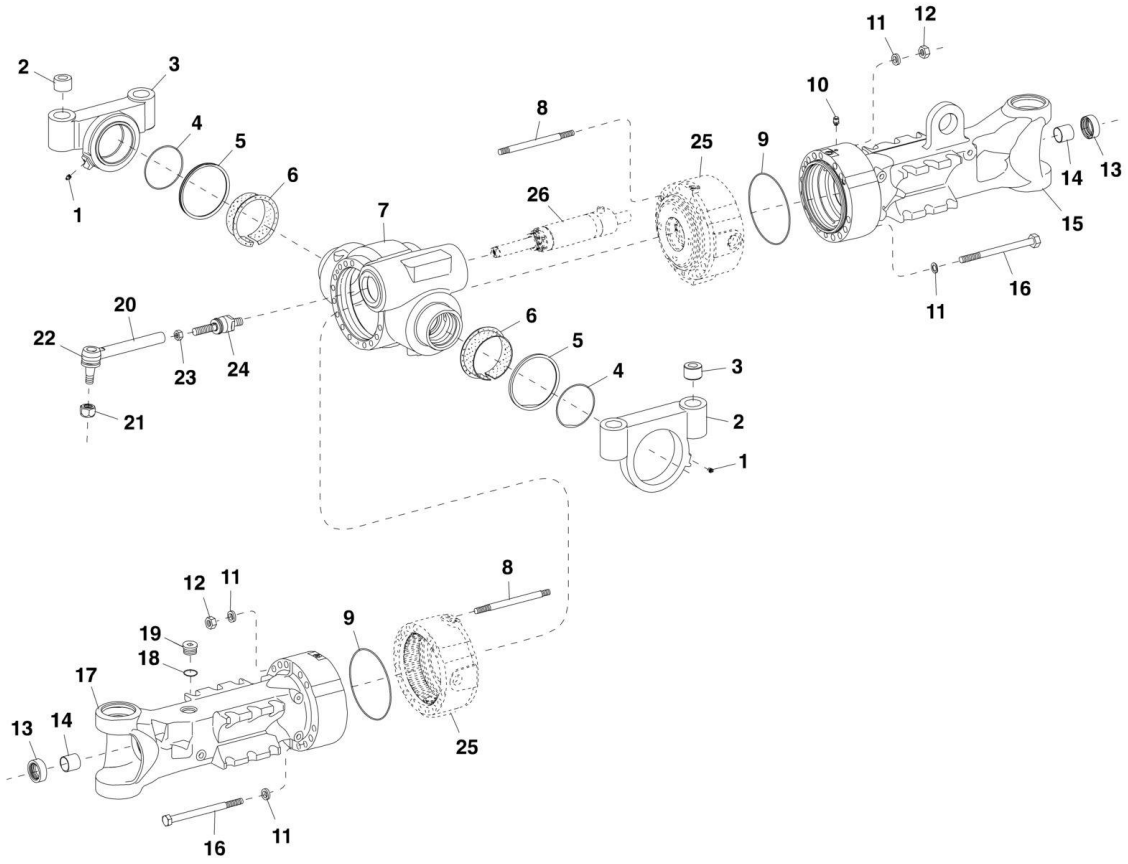

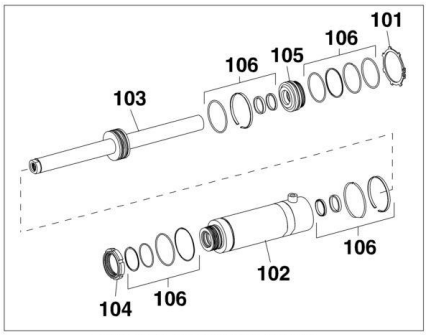

644E PRIOR TO AXLE SN 1277813
944E PRIOR TO AXLE SN 974122

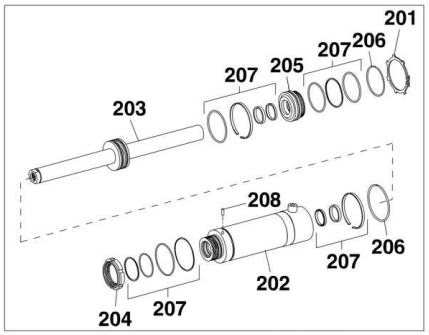

644E AXLE SN 1277813 TO PRESENT
944E AXLE SN 974122 TO PRESENT

PU1983

FIGURE 5-9. FRONT AXLE - AXLE CASING (644E Prior to SN 0160039830, Excluding 0160036724, 0160036811, 0160036907 and 0160037012; 944E Prior to SN 0160040124, Excluding 0160034634, 0160036710, 0160036722, 0160036735 and 0160036738)

ITEM	PART NUMBER	QTY	DESCRIPTION	REV
1	1319423	2	GREASE FITTING	
2	1319441	4	CENTERING BUSHING	
3	8035933	2	BRACKET	
4	1319439	2	O-RING	
5	1319440	2	V-RING	
6	8036419	2	FLANGE BUSHING	
7	7027227	1	AXLE DRIVE HOUSING, (644E)	
7	8036417	1	AXLE DRIVE HOUSING, (944E)	
8	8036313	8	STUD	
9	1319425	2	O-RING	
10	1319436	1	BREATHER	
11	8036312	30	WASHER	
12	1319429	8	HEX NUT	
13	7027211	2	SHAFT SEAL	
14	1319433	2	BUSHING	
15	8036430	1	RIGHT FRONT AXLE CASING, (644E)	
15	8035924	1	RIGHT FRONT AXLE CASING, (944E)	
16	8035927	22	HEX SCREW	
17	8036431	1	LEFT FRONT AXLE CASING, (644E)	
17	8035925	1	LEFT FRONT AXLE CASING, (944E)	
18	8036331	1	O-RING	
19	1319506	1	SCREW PLUG	
20	1321148	2	TRACK ROD, (includes items 21 thru 24)	
21	8036758	1	LOCKING NUT	
22	8036756	1	BALL JOINT WITH PIPE COUPLING	
23	8036759	1	HEX NUT	
24	8036757	1	AXIAL JOINT COUPLING	
25		Ref	BRAKE HOUSING, (See FRONT AXLE - M-DISC BRAKE for Breakdown)	
26	1321149	NLA	STEERING CYLINDER, (no longer available, use items 101 thru 106 for service or 70021617 for replacement) (644E Axle and 944E Axle) **(644E Prior to SN 1277813; 944E Prior to SN 974122)**	
101	N.S.S.	NLA	L-RING, (no longer available, use 70021617 for replacement)	
102	N.S.S.	1	TUBE WELDMENT	
103	N.S.S.	1	PISTON ROD	
104	8035998	1	SLOTTED NUT	
105	N.S.S.	NLA	GUIDE PIECE, (no longer available, use 70021617 for replacement)	
106	8035981	1	SEAL KIT	
	70021617	1	STEERING CYLINDER, (includes items 201 thru 208), (644E Axle and 944E Axle) **(644E SN 1277813 to Present; 944E SN 974122 to Present)**	
201	70021571	1	L-RING	
202		Ref	CYLINDER TUBE	
203	70021568	1	PISTON ROD	
204	70021570	1	SLOTTED NUT	
205	70021569	1	GUIDE PIECE	
206	70021726	2	RETAINING RING	
207	70021495	1	SEAL KIT	

ITEM	PART NUMBER	QTY	DESCRIPTION	REV
208	70022610	1	SLOTTED PIN	

FIGURE 5-10. FRONT AXLE - AXLE CASING (644E SN 0160039830 to Present, Including 0160036724, 0160036811, 0160036907 and 0160037012; 944E SN 0160040124 to Present, Including 0160034634, 0160036710, 0160036722, 0160036735 and 0160036738)

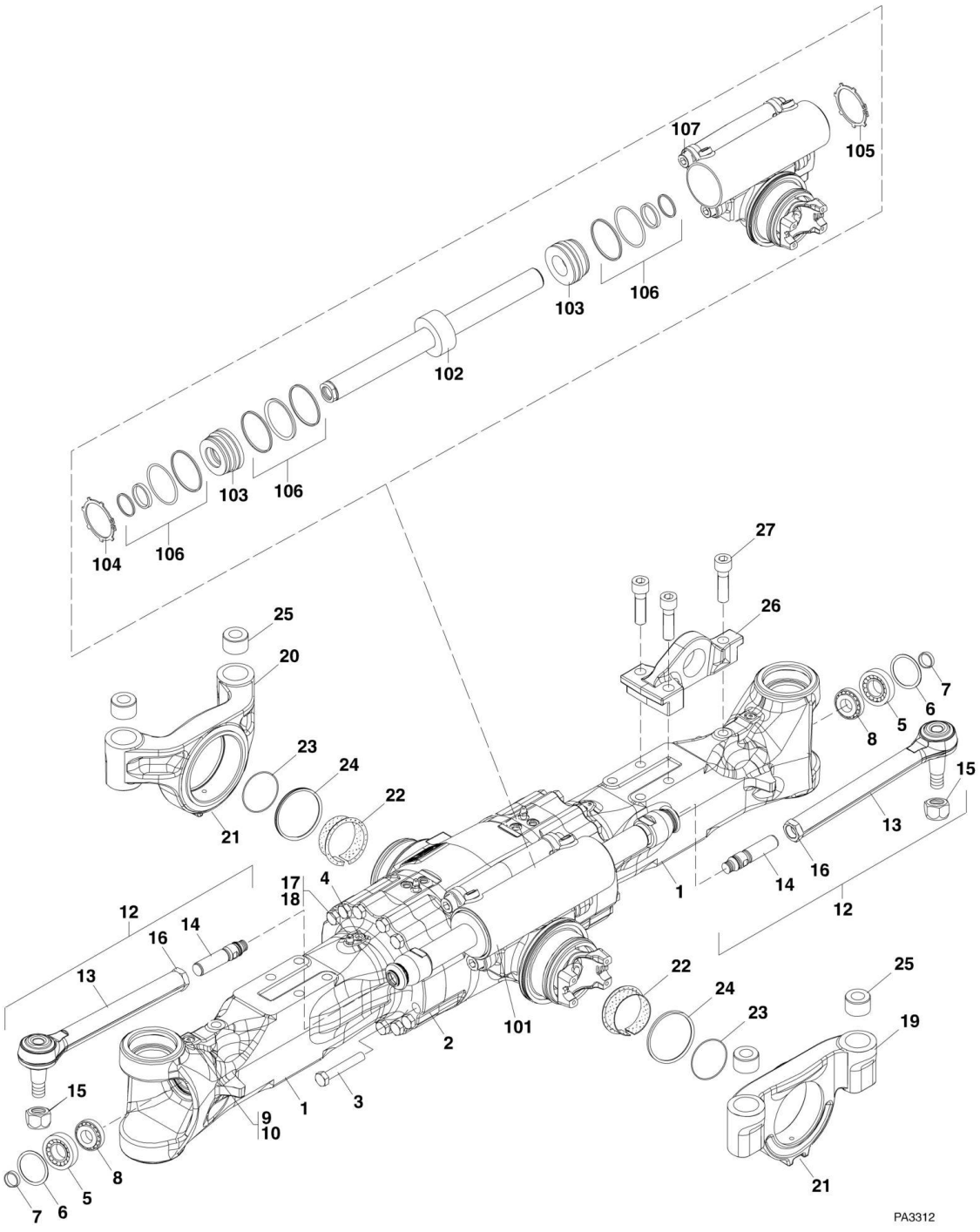

FIGURE 5-10. FRONT AXLE - AXLE CASING (644E SN 0160039830 to Present, Including 0160036724, 0160036811, 0160036907 and 0160037012; 944E SN 0160040124 to Present, Including 0160034634, 0160036710, 0160036722, 0160036735 and 0160036738)

ITEM	PART NUMBER	QTY	DESCRIPTION	REV
1	70022255	2	AXLE CASING	
2	70022259	1	AXLE DRIVE HOUSING	
3	70022206	28	HEX HD CAPSCREW, M18X180	
4	1319578	4	SCREW PLUG	
5	70022241	2	BUSHING	
6	70022204	2	O-RING	
7	70022217	2	RING	
8	10731790	2	BEARING	
9	70022201	2	SET SCREW, M10X1X16	
10	1319666	2	SCREW PLUG	
10	7027217	2	O-RING	
12	70022174	2	TIE ROD, (includes items 13 thru 16)	
13	70022175	1	BALL JOINT	
14	70022172	1	AXIAL JOINT	
15	8036758	1	LOCKNUT	
16	8036759	1	HEX NUT	
17	1319436	1	BREATHER	
18	8036418	1	SCREW PLUG	
19	70022246	1	BRACKET	
20	70022247	1	BRACKET	
21	1319423	2	GREASE FITTING	
22	70022182	2	FLANGE BUSHING	
23	70022205	2	O-RING	
24	70022219	2	V-RING	
25	1319441	4	BUSHING	
26	70022254	1	BRACKET	
27	1001103619	3	HEX HD CAPSCREW, M22X1.5X80	
101	70022173	1	STEERING CYLINDER, (includes items 102 thru 106)	
102	70022177	1	PISTON ROD	
103	70022184	2	BREAK HEAD	
104	70022181	2	RETAINING RING	
105	70022180	2	RETAINING RING	
106	70022178	1	SEAL KIT	
107	70022210	4	CAPSCREW, M22X1.5X55	

FIGURE 5-11. FRONT AXLE - M-DISC BRAKE (644E Prior to SN 0160039830, Excluding 0160036724, 0160036811, 0160036907 and 0160037012; 944E Prior to SN 0160040124, Excluding 0160034634, 0160036710, 0160036722, 0160036735 and 0160036738)

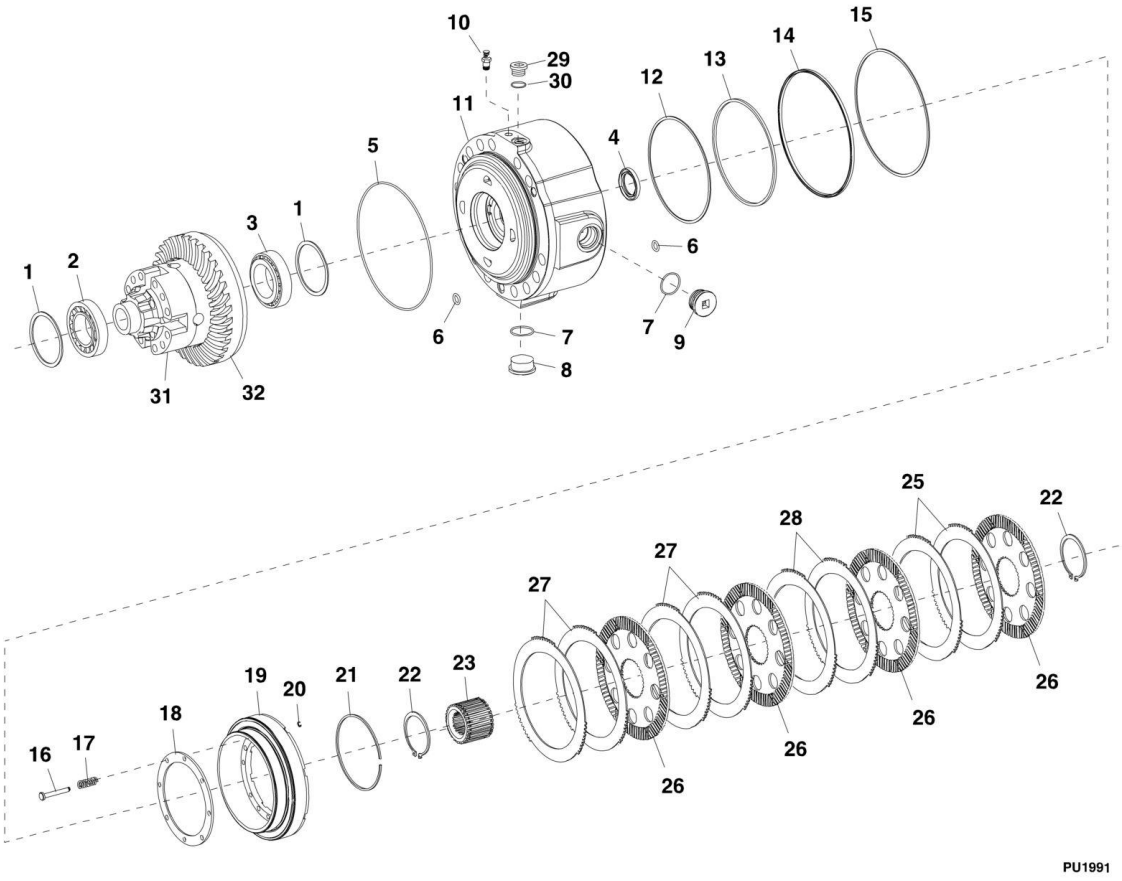

FIGURE 5-11. FRONT AXLE - M-DISC BRAKE (644E Prior to SN 0160039830, Excluding 0160036724, 0160036811, 0160036907 and 0160037012; 944E Prior to SN 0160040124, Excluding 0160034634, 0160036710, 0160036722, 0160036735 and 0160036738)

ITEM	PART NUMBER	QTY	DESCRIPTION	REV
1	1319531	AR	SHIM, 0.1mm	
1	8035945	AR	SHIM, 0.15mm	
1	1319530	AR	SHIM, 0.2mm	
1	8035946	AR	SHIM, 0.25mm	
1	1319529	AR	SHIM, 0.3mm	
1	8035947	AR	SHIM, 0.35mm	
1	8035951	AR	SHIM, 0.4mm	
1	1319543	AR	SHIM, 0.45mm	
1	1319527	AR	SHIM, 0.5mm	
1	1321158	AR	SHIM, 0.55mm	
1	1319526	AR	SHIM, 0.6mm	
1	1319532	AR	SHIM, 0.65mm	
1	1319533	AR	SHIM, 0.7mm	
1	1319534	AR	SHIM, 0.75mm	
1	1319525	AR	SHIM, 0.8mm	
1	1319535	AR	SHIM, 0.85mm	
1	1319536	AR	SHIM, 0.9mm	
1	1319537	AR	SHIM, 0.95mm	
1	1319524	AR	SHIM, 1.0mm	
1	1319545	AR	SHIM, 1.05mm	
1	1319538	AR	SHIM, 1.10mm	
1	1319539	AR	SHIM, 1.15mm	
1	1319523	AR	SHIM, 1.20mm	
1	1319540	AR	SHIM, 1.25mm	
1	1319541	AR	SHIM, 1.30mm	
1	1319542	AR	SHIM, 1.35mm	
1	1319522	AR	SHIM, 1.40mm	
1	1319521	AR	SHIM, 1.45mm	
1	1319520	AR	SHIM, 1.50mm	
1	1319519	AR	SHIM, 1.55mm	
1	1319518	AR	SHIM, 1.60mm	
1	1319517	AR	SHIM, 1.65mm	
1	1319510	AR	SHIM, 2.0mm	
1	1321159	AR	SHIM, 1.47mm	
1	8035948	AR	SHIM, 1.63mm	
1	1319516	AR	SHIM, 1.70mm	
1	1319515	AR	SHIM, 1.75mm	
1	1319514	AR	SHIM, 1.80mm	
1	1319513	AR	SHIM, 1.85mm	
1	1319512	AR	SHIM, 1.90mm	
1	1319511	AR	SHIM, 1.95mm	
2	8036445	2	ROLLER BEARING	
3	8036447	2	ROLLER BEARING	
4	8036444	2	SHAFT SEAL	
5	1319425	2	O-RING	
6	1319491	12	O-RING	
7	8036331	4	O-RING	
8	8036846	2	SCREW PLUG	

ITEM	PART NUMBER	QTY	DESCRIPTION	REV
9	1319506	2	SCREW PLUG	
10	1319505	2	BREATHER	
11	8035936	Ref	BRAKE HOUSING, (right side), (Axle), (see note) **(Prior to SN 675668)**	
11	70020483	1	BRAKE HOUSING, (right side), (Axle) **(SN 675668 to Present)**	
11	8035939	Ref	BRAKE HOUSING, (left side), (Axle), (see note) **(Prior to SN 675668)**	
11	70020484	1	BRAKE HOUSING, (left side), (Axle) **(SN 675668 to Present)**	
12	1321151	2	SUPPORT RING	
13	1321162	2	U-RING	
14	1321163	2	U-RING	
15	1321152	2	SUPPORT RING	
16	1319496	16	PIN	
17	1319497	16	COMPRESSION SPRING	
18	8036305	2	WASHER	
19	8036304	2	PISTON	
20	1319499	16	CRESCENT RING	
21	1319504	2	SNAP RING	
22	10731949	4	RETAINING RING	
23	1321174	2	DISC CARRIER, (Axle) **(Prior to SN 823842)**	
23	70020409	1	DISC CARRIER, (Axle) **(SN 823842 to Present)**	
25	1319500	4	O. CLUTCH DISC, 2.0mm, (Axle) **(Prior to SN 675668)**	
25	70020485	4	O. CLUTCH DISC, 2.0mm, (Axle) **(SN 675668 to Present)**	
25	1319501	4	O. CLUTCH DISC, 2.5mm, (Axle) **(Prior to SN 675668)**	
25	70020486	4	O. CLUTCH DISC, 2.5mm, (Axle) **(SN 675668 to Present)**	
25	1319502	4	O. CLUTCH DISC, 3.0mm, (Axle) **(Prior to SN 675668)**	
25	70020487	4	O. CLUTCH DISC, 3.0mm, (Axle) **(SN 675668 to Present)**	
26	1321150	10	I. CLUTCH DISC, (Axle) **(Prior to SN 823842)**	
26	70020408	4	I. CLUTCH DISC, (Axle) **(SN 823842 to Present)**	
27	1319502	8	O. CLUTCH DISC, 3.0mm, (Axle) **(Prior to SN 675668)**	
27	70020487	8	O. CLUTCH DISC, 3.0mm, (Axle) **(SN 675668 to Present)**	
28	1319501	4	O. CLUTCH DISC, 2.5mm, (Axle) **(Prior to SN 675668)**	
28	70020486	4	O. CLUTCH DISC, 2.5mm, (Axle) **(SN 675668 to Present)**	
29	1319666	2	SCREW PLUG	
30	7027217	2	O-RING	
31		Ref	LIMITED SLIP DIFFERENTIAL, (See FRONT AXLE - LIMITED SLIP DIFFERENTIAL for Breakdown)	
32		Ref	GEAR SET BEVEL, (See FRONT AXLE – INPUT for Breakdown)	
N1	Note	Ref	**PARTS ARE NO LONGER AVAILABLE, ORDER BRAKE HOUSINGS 70020483 & 70020484, QUANTITY REQUIRED OF OUTER DISCS 70020485, 70020486 & 70020487, QUANTITY 2 OF 70020413 END PLATES**	

FIGURE 5-12. FRONT AXLE - M-DISC BRAKE (644E SN 0160039830 to Present, Including 0160036724, 0160036811, 0160036907 and 0160037012; 944E SN 0160040124 to Present, Including 0160034634, 0160036710, 0160036722, 0160036735 and 0160036738)

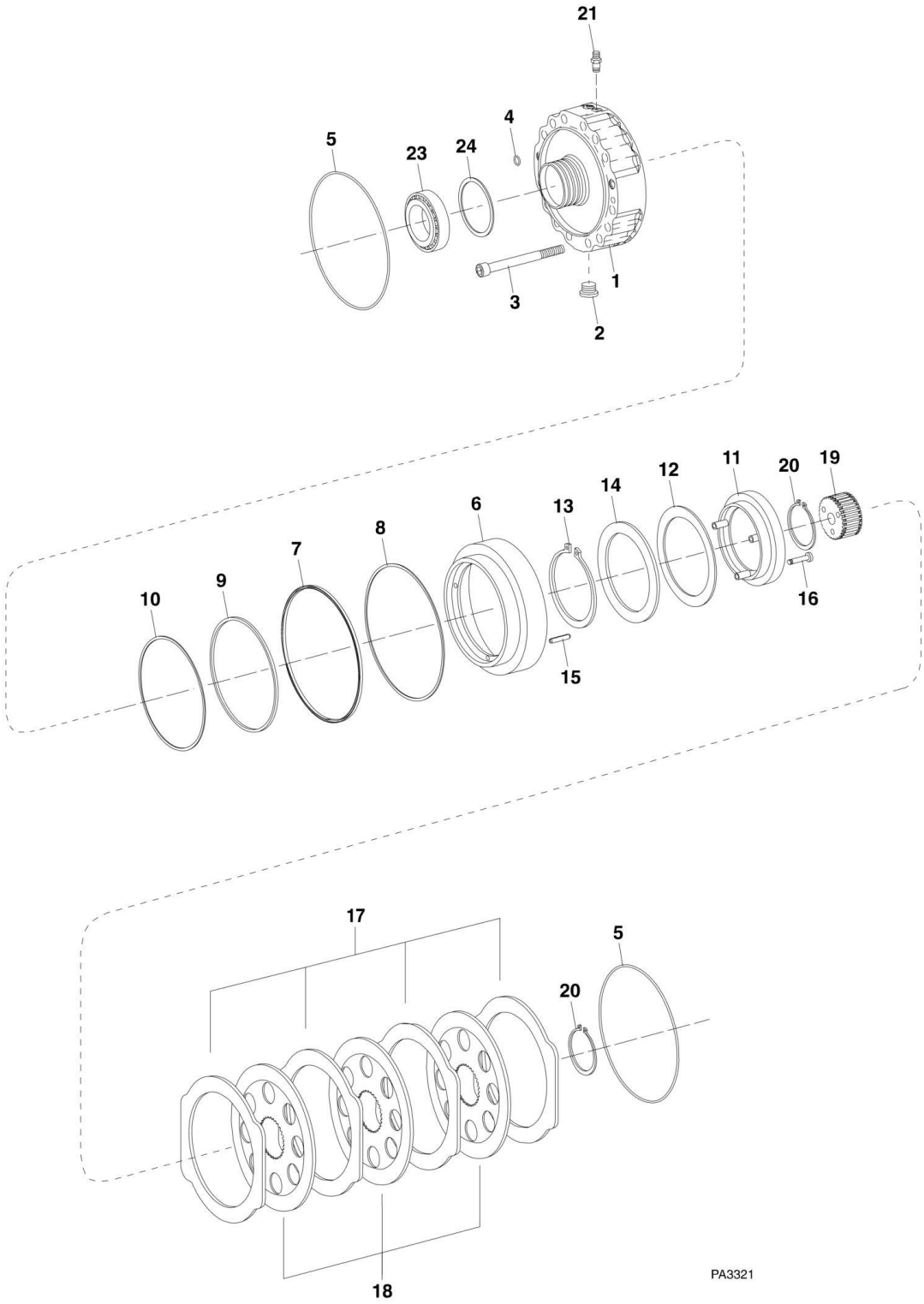

FIGURE 5-12. FRONT AXLE - M-DISC BRAKE (644E SN 0160039830 to Present, Including 0160036724, 0160036811, 0160036907 and 0160037012; 944E SN 0160040124 to Present, Including 0160034634, 0160036710, 0160036722, 0160036735 and 0160036738)

ITEM	PART NUMBER	QTY	DESCRIPTION	REV
1	70022282	2	BRAKE HOUSING	
2	1319578	2	SCREW PLUG	
3	70022209	6	CAP SCREW, M12X105	
4	8036847	10	O-RING	
5	80304462	4	O-RING	
6	70022250	2	PISTON	
7	70022190	2	PISTON PACKING	
8	70022193	2	BACKUP RING	
9	70022189	2	PISTON PACKING	
10	70022194	2	BACKUP RING	
11	70022236	2	RING	
12	70022183	2	CUP SPRING	
13	70022198	2	RETAINING RING	
14	70022235	2	WASHER	
15	70022186	8	SLOT PIN	
16	1319214	6	CAP SCREW, M8X40	
17	70022196	8	O.CLUTCH DISC	
18	70022176	6	I.CLUTCH DISC	
19	70022253	2	DISC CARRIER	
20	10731949	4	RETAINING RING	
21	70022171	2	BREATHER	
22	70022215	2	SCREW PLUG, (not shown)	
23	8036447	2	BEARING	
24	1319537	AR	SHIM, A=0.95	
24	1319545	AR	SHIM, A=1.05	
24	1319539	AR	SHIM, A=1.15	
24	1319540	AR	SHIM, A=1.25	
24	1319542	AR	SHIM, A=1.35	

FIGURE 5-13. FRONT AXLE - BRAKE (644E Prior to SN 0160039830, Excluding 0160036724, 0160036811, 0160036907 and 0160037012; 944E Prior to SN 0160040124, Excluding 0160034634, 0160036710, 0160036722, 0160036735 and 0160036738)

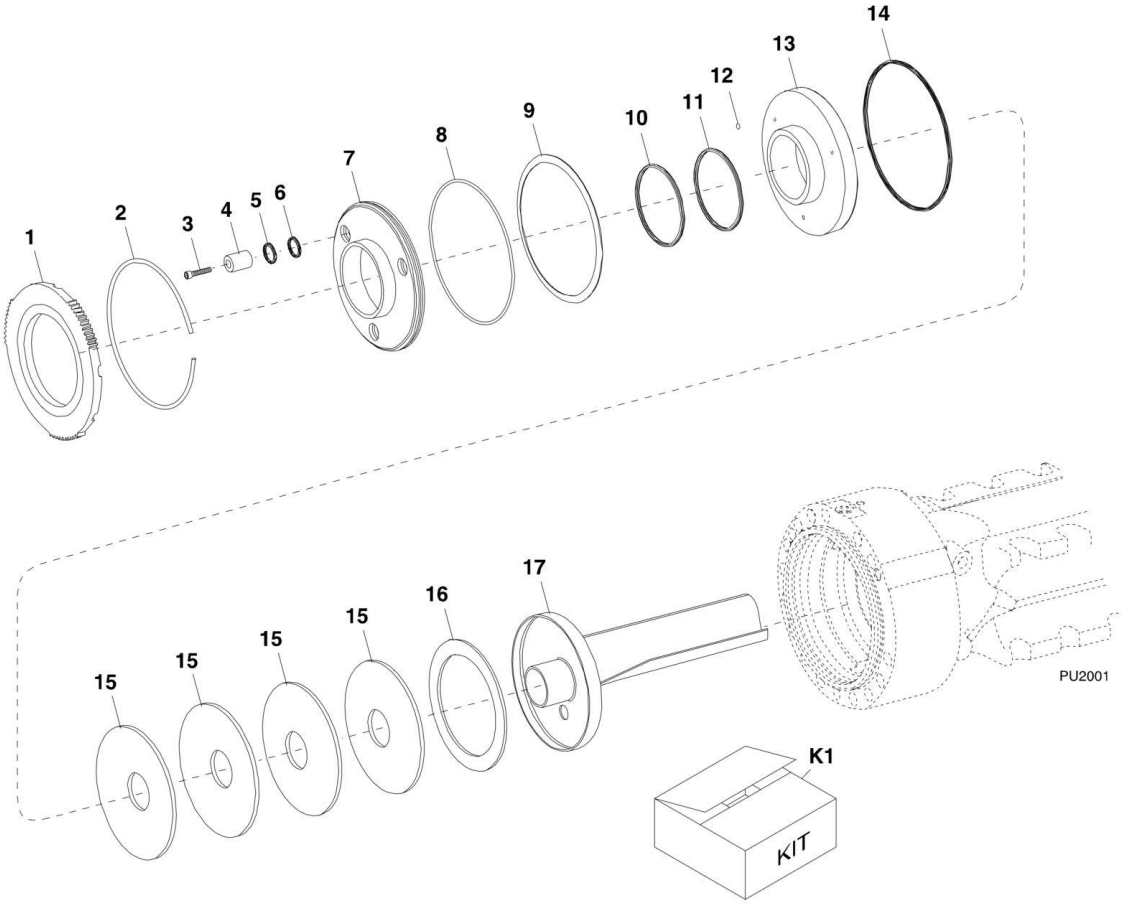

FIGURE 5-13. FRONT AXLE - BRAKE (644E Prior to SN 0160039830, Excluding 0160036724, 0160036811, 0160036907 and 0160037012; 944E Prior to SN 0160040124, Excluding 0160034634, 0160036710, 0160036722, 0160036735 and 0160036738)

ITEM	PART NUMBER	QTY	DESCRIPTION	REV
1	Not Available	NLA	END SHIM, (no longer available, use Kit K1 for replacement), (644E Axle and 944E Axle) **(644E Prior to SN 332590; 944E Prior to SN 336083)**	
1	8036848	2	END SHIM, (644E Axle and 944E Axle) **(644E SN 332590 through 675667; 944E SN 336083 through 675667)**	
1	70020413	2	END SHIM, (Axle) **(SN 675668 to Present)**	
2	1321206	2	SNAP RING	
3	8036321	6	CAP SCREW	
4	Not Available	NLA	PRESSURE PIN, (no longer available, use Kit K1 for replacement), (644E Axle and 944E Axle) **(644E Prior to SN 332590; 944E Prior to SN 336083)**	
4	1321244	6	PRESSURE PIN, (644E Axle and 944E Axle) **(644E SN 332590 to Present; 944E SN 336083 to Present)**	
5	8036859	6	O-RING	
6	Not Available	NLA	FOUR-LIP RING, (no longer available, use Kit K1 for replacement), (644E Axle and 944E Axle) **(644E Prior to SN 332590; 944E Prior to SN 336083)**	
6	8036861	6	U-RING, (644E Axle and 944E Axle) **(644E SN 332590 to Present; 944E SN 336083 to Present)**	
7	Not Available	NLA	SEALING WASHER, (no longer available, use Kit K1 for replacement), (644E Axle and 944E Axle) **(644E Prior to SN 332590; 944E Prior to SN 336083)**	
7	8036849	2	SEALING WASHER, (644E Axle and 944E Axle) **(644E SN 332590 to Present; 944E SN 336083 to Present)**	
8	8036320	2	O-RING	
9	1321208	2	CUP SPRING	
10	Not Available	NLA	SUPPORT RING, (no longer available, use Kit K1 for replacement), (644E Axle and 944E Axle) **(644E Prior to SN 332590; 944E Prior to SN 336083)**	
10	8036855	2	BACKUP RING, (644E Axle and 944E Axle) **(644E SN 332590 to Present; 944E SN 336083 to Present)**	
11	Not Available	NLA	FOUR-LIP RING, (no longer available, use Kit K1 for replacement), (644E Axle and 944E Axle) **(644E Prior to SN 332590; 944E Prior to SN 336083)**	
11	8036854	2	U-RING, (644E Axle and 944E Axle) **(644E SN 332590 to Present; 944E SN 336083 to Present)**	
12	Not Available	NLA	SUPPORT RING, (no longer available, use Kit K1 for replacement),(644E Axle and 944E Axle) **(644E Prior to SN 332590; 944E Prior to SN 336083)**	
12	8036862	6	BACKUP RING, (644E Axle and 944E Axle) **(644E SN 332590 to Present; 944E SN 336083 to Present)**	
13	Not Available	NLA	PISTON, (no longer available, use Kit K1 for replacement), (644E Axle and 944E Axle) **(644E Prior to SN 332590; 944E Prior to SN 336083)**	
13	7027212	2	PISTON, (644E Axle and 944E Axle) **(644E SN 332590 to Present; 944 SN 336083 to Present)**	
14	Not Available	NLA	FOUR-LIP RING,(no longer available, use Kit K1 for replacement), (644E Axle and 944E Axle) **(644E Prior to SN 332590; 944E Prior to SN 336083)**	
14	8036852	2	U-RING, (644E Axle and 944E Axle) **(644E SN 332590 to Present; 944E SN 336083 to Present)**	
15	1321207	8	CUP SPRING	
16	8035958	2	SPACING WASHER	
17	Not Available	NLA	OIL DAM, (no longer available, use Kit K1 for replacement), (644E	

ITEM	PART NUMBER	QTY	DESCRIPTION	REV
			Axle and 944E Axle) **(644E Prior to SN 332590; 944E Prior to SN 336083)**	
17	8036856	2	OIL DAM, (644E Axle and 944E Axle) **(644E SN 332590 to Present; 944E SN 336083 to Present)**	
K1	7029104	AR	BRAKE SEAL KIT, (Axle), (contains quantity of 1 each of items 1, 2, 7 thru 11, 13, 14, 17; quantity of 3 each of items 3 thru 6, 12 and quantity of 1 of 1319425 o-ring) **(Prior to SN 675668)**	

FIGURE 5-14. FRONT AXLE - BRAKE (644E SN 0160039830 to Present, Including 0160036724, 0160036811, 0160036907 and 0160037012; 944E SN 0160040124 to Present, Including 0160034634, 0160036710, 0160036722, 0160036735 and 0160036738)

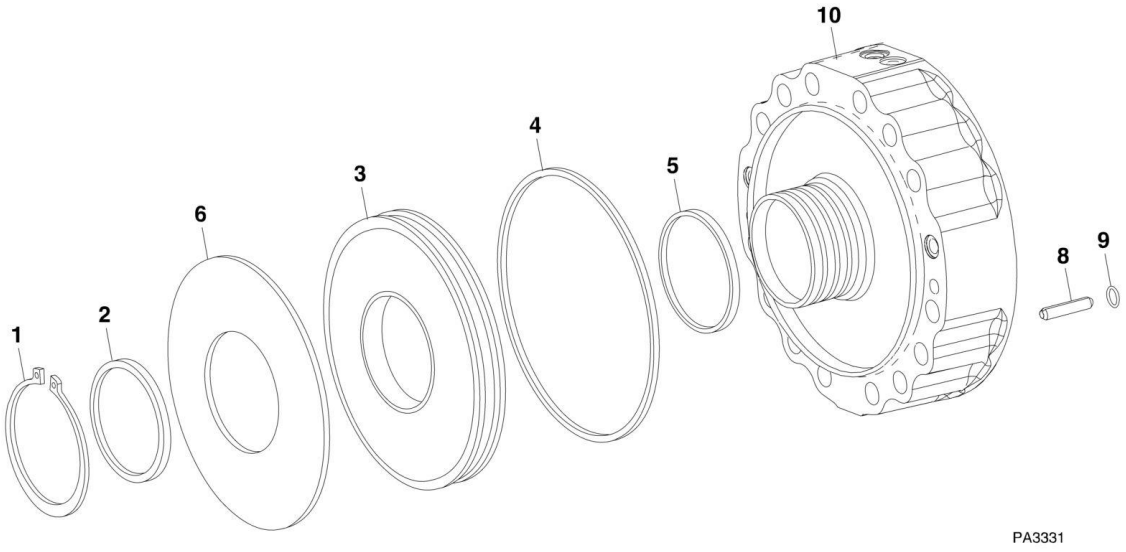

FIGURE 5-14. FRONT AXLE - BRAKE (644E SN 0160039830 to Present, Including 0160036724, 0160036811, 0160036907 and 0160037012; 944E SN 0160040124 to Present, Including 0160034634, 0160036710, 0160036722, 0160036735 and 0160036738)

ITEM	PART NUMBER	QTY	DESCRIPTION	REV
1	70022199	2	SNAP RING	
2	70022252	2	WASHER	
3	70022251	2	PISTON	
4	70022191	2	PISTON PACKING	
5	70022192	2	ROD SEAL	
6	70022195	2	CUP SPRING	
7	70022215	2	SCREW PLUG, (not shown)	
8	70022248	14	PRESSURE PIN	
9	70022202	14	O-RING	
10		Ref	BRAKE HOUSING, (See FRONT AXLE - M-DISC BRAKE for Breakdown)	

FIGURE 5-15. FRONT AXLE - JOINT HOUSING 644E (Prior to SN 0160039830, Excluding 0160036724, 0160036811, 0160036907 and 0160037012)

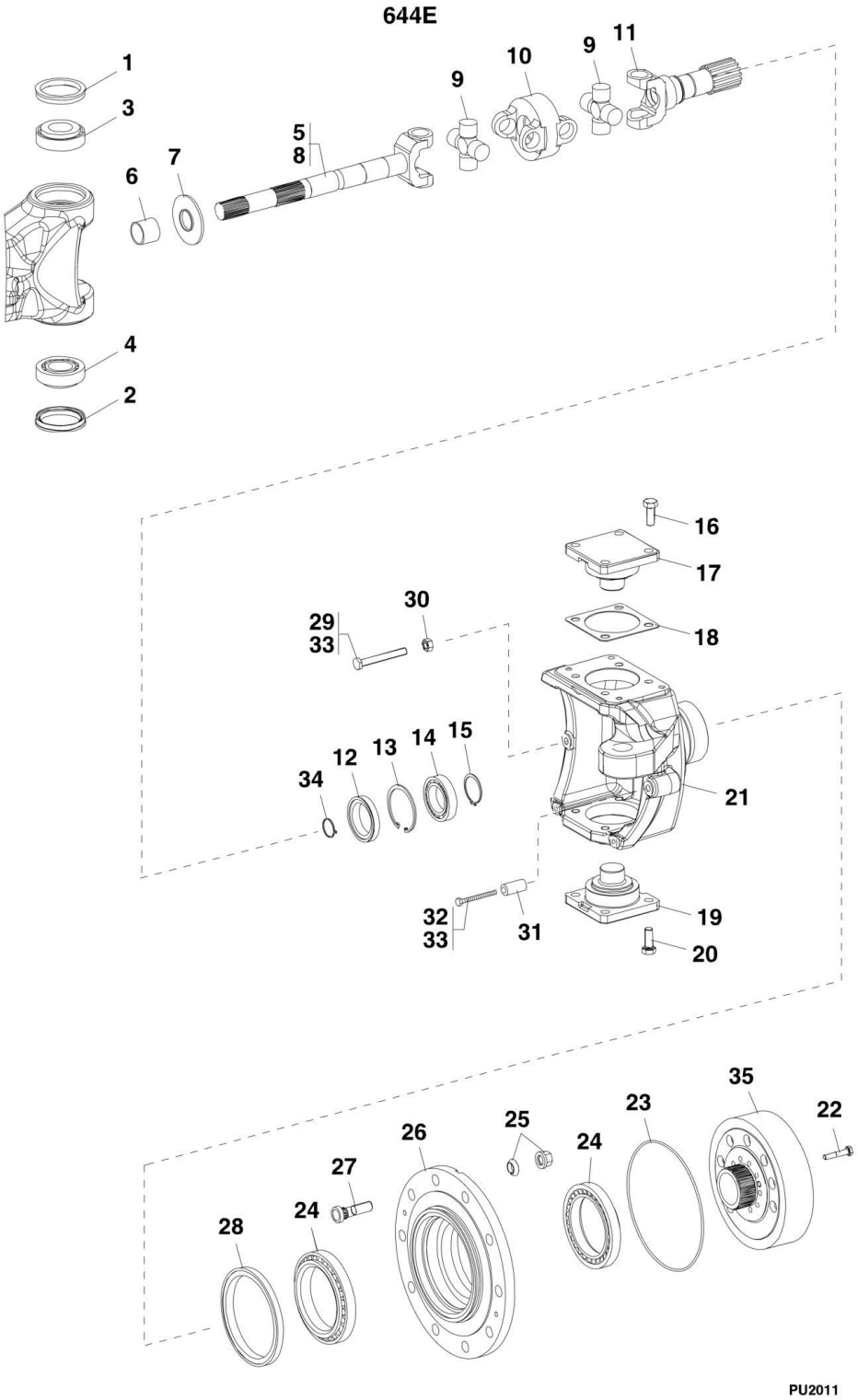

FIGURE 5-15. FRONT AXLE - JOINT HOUSING 644E (Prior to SN 0160039830, Excluding 0160036724, 0160036811, 0160036907 and 0160037012)

ITEM	PART NUMBER	QTY	DESCRIPTION	REV
1	8036338	2	MULTI SEAL RING	
2	1319447	2	SHAFT SEAL	
3	1319444	2	ROLLER BEARING	
4	1319445	2	ROLLER BEARING	
5	7027218	2	DRIVESHAFT UNIVERSAL COUPLING, (not maintenance free), (includes items 6 thru 11), (Axle) **(Prior to SN 720124)**	
5	70022052	2	DRIVESHAFT UNIVERSAL COUPLING, (maintenance free), (7028979 is no longer available, use 70022052 for replacement or items 6 thru 11 for service), (Axle) **(SN 720125 to Present)**	
6	8035973	1	BUSHING	
7	8035996	1	SCREEN SHEET	
8	7027221	1	JOINT FORK, (Axle) **(Prior to SN 720124)**	
8	8035995	1	JOINT FORK, (Axle) **(SN 720125 to Present)**	
9	7027222	2	JOINT CROSS, (Axle) **(Prior to SN 720124)**	
9	70021554	2	JOINT CROSS, (Axle) **(SN 720125 to Present)**	
10	7027219	1	CENTRAL PIECE, (Axle) **(Prior to SN 720124)**	
10	70021553	1	CENTRAL PIECE, (Axle) **(SN 720125 to Present)**	
11	7027220	1	JOINT FORK, (Axle) **(Prior to SN 720124)**	
11	8035994	1	JOINT FORK, (Axle) **(SN 720125 to Present)**	
12	7028977	2	CASSETTE RING	
13	1319210	2	RETAINING RING	
14	1321157	2	BALL BEARING	
15	80304405	2	RETAINING RING	
16	1319463	8	HEX SCREW	
17	1319461	2	BEARING PIN	
18	1319448	AR	SHIM, 0.2mm	
18	1319449	AR	SHIM, 0.3mm	
18	1319450	AR	SHIM, 0.4mm	
18	1319460	AR	SHIM, 0.5mm	
18	1319451	AR	SHIM, 0.6mm	
18	1319459	AR	SHIM, 0.7mm	
18	1319452	AR	SHIM, 0.8mm	
18	1319453	AR	SHIM, 1.0mm	
18	1319454	AR	SHIM, 1.2mm	
18	1319455	AR	SHIM, 1.4mm	
18	1319456	AR	SHIM, 1.6mm	
18	1319457	AR	SHIM, 1.8mm	
18	1319458	AR	SHIM, 2.0mm	
19	1319462	2	BEARING PIN	
20	1319464	8	HEX SCREW	
21	1321245	1	JOINT HOUSING, (right side)	
21	1321246	1	JOINT HOUSING, (left side)	
22	8035997	20	HEX SCREW	
23	1319470	2	O-RING	
24	1319472	4	ROLLER BEARING	
25	8024036	16	WHEEL NUT AND SPERICAL WASHER SERVICE KIT	
26	8036435	2	HUB	
27	8036434	16	WHEEL BOLT, (stud)	
28	80304173	2	SHAFT SEAL	

ITEM	PART NUMBER	QTY	DESCRIPTION	REV
29	8036610	2	STOP SCREW	
30	1319477	2	NUT	
31	8036413	2	SPACER TUBE, (used with rock tires only)	
32	8036330	2	STOP SCREW	
33	8526007	AR	LOCTITE 242, (apply to items 29 & 32)	
34	1321226	2	RETAINING RING	
35		Ref	RING GEAR, (See FRONT AXLE - PLANETARY DRIVE for Breakdown)	

FIGURE 5-16. FRONT AXLE - JOINT HOUSING 944E (Prior to SN 0160040124, Excluding 0160034634, 0160036710, 0160036722, 0160036735 and 0160036738)

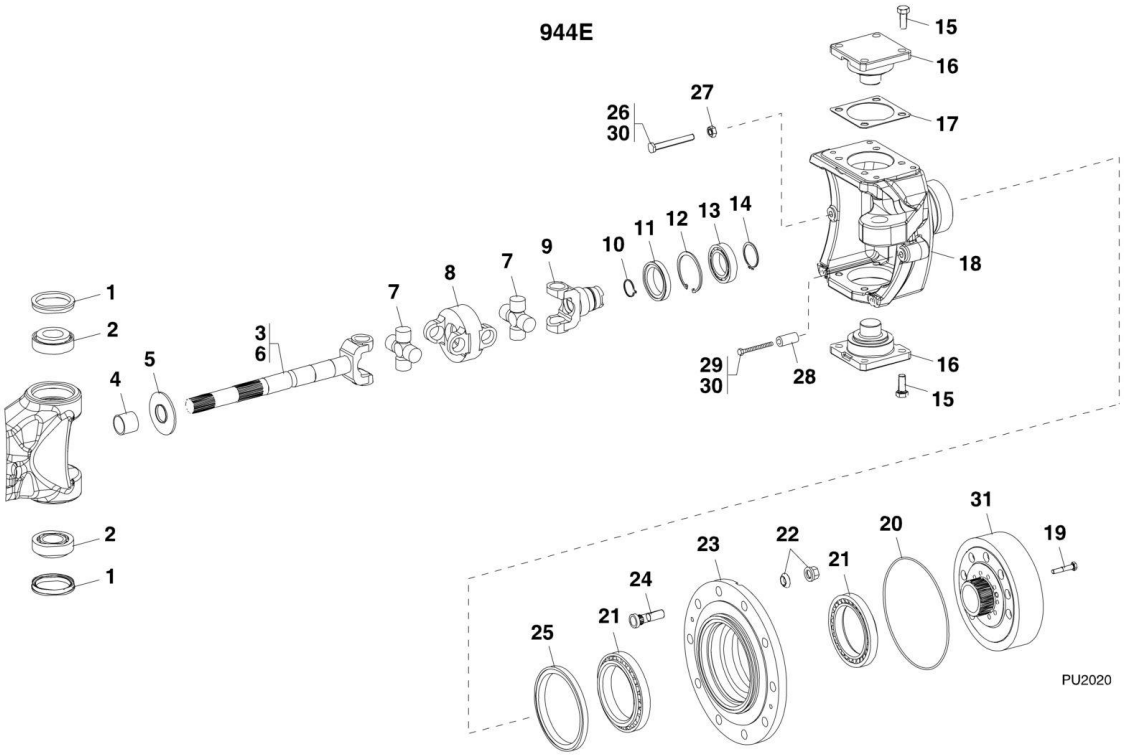

FIGURE 5-16. FRONT AXLE - JOINT HOUSING 944E (Prior to SN 0160040124, Excluding 0160034634, 0160036710, 0160036722, 0160036735 and 0160036738)

ITEM	PART NUMBER	QTY	DESCRIPTION	REV
1	1319447	4	SHAFT SEAL	
2	1319445	4	ROLLER BEARING	
3	1321175	2	DRIVESHAFT UNIVERSAL COUPLING, (includes items 4 thru 9)	
4	8035973	1	BUSHING	
5	8035974	1	SCREENSHEET	
6	8035972	1	JOINT COUPLING FORK	
7	8035970	2	JOINT CROSS, (Axle) **(Prior to SN 755242)**	
7	70021790	2	JOINT CROSS, (Axle) **(SN 755242 to Present)**	
8	8035969	1	CENTRAL PIECE, (Axle) **(Prior to SN 755242)**	
8	70021789	1	CENTRAL PIECE, (Axle) **(SN 755242 to Present)**	
9	8035971	1	JOINT FORK	
10	1321228	2	RETAINING RING	
11	7028977	2	CASSETTE RING	
12	1319210	2	RETAINING RING	
13	1321157	2	BALL BEARING	
14	80304405	2	RETAINING RING	
15	1319464	16	HEX SCREW	
16	1319462	4	BEARING PIN	
17	1321249	AR	SHIM, 0.2mm	
17	8035959	AR	SHIM, 0.3mm	
17	8035960	AR	SHIM, 0.4mm	
17	8035961	AR	SHIM, 0.5mm	
17	8035962	AR	SHIM, 0.6mm	
17	1321250	AR	SHIM, 0.7mm	
17	8035963	AR	SHIM, 0.8mm	
17	8035964	AR	SHIM, 1.0mm	
17	8035965	AR	SHIM, 1.2mm	
17	8035966	AR	SHIM, 1.4mm	
17	1321251	AR	SHIM, 1.6mm	
17	8035967	AR	SHIM, 1.8mm	
17	8035968	AR	SHIM, 2.0mm	
18	1321256	1	JOINT HOUSING, (right side)	
18	1321257	1	JOINT HOUSING, (left side)	
19	8036866	20	HEX SCREW	
20	1321155	2	O-RING	
21	1319472	4	ROLLER BEARING	
22	8024036	20	WHEEL NUT AND SPERICAL WASHER SERVICE KIT	
23	1321254	2	HUB	
24	8036434	20	WHEEL BOLT, (stud)	
25	80304173	2	SHAFT SEAL	
26	1319476	2	STOP SCREW	
27	1319477	2	NUT	
28	8036413	2	SPACER TUBE, (if equipped with rock tires)	
29	8036330	2	STOP SCREW	
30	8526007	AR	LOCTITE 242, (apply to items 26 & 29)	
31		Ref	RING GEAR, (See FRONT AXLE - PLANETARY DRIVE for Breakdown)	

FIGURE 5-17. FRONT AXLE - JOINT HOUSING (644E SN 0160039830 to Present, Including 0160036724, 0160036811, 0160036907 and 0160037012; 944E SN 0160040124 to Present, Including 0160034634, 0160036710, 0160036722, 0160036735 and 0160036738)

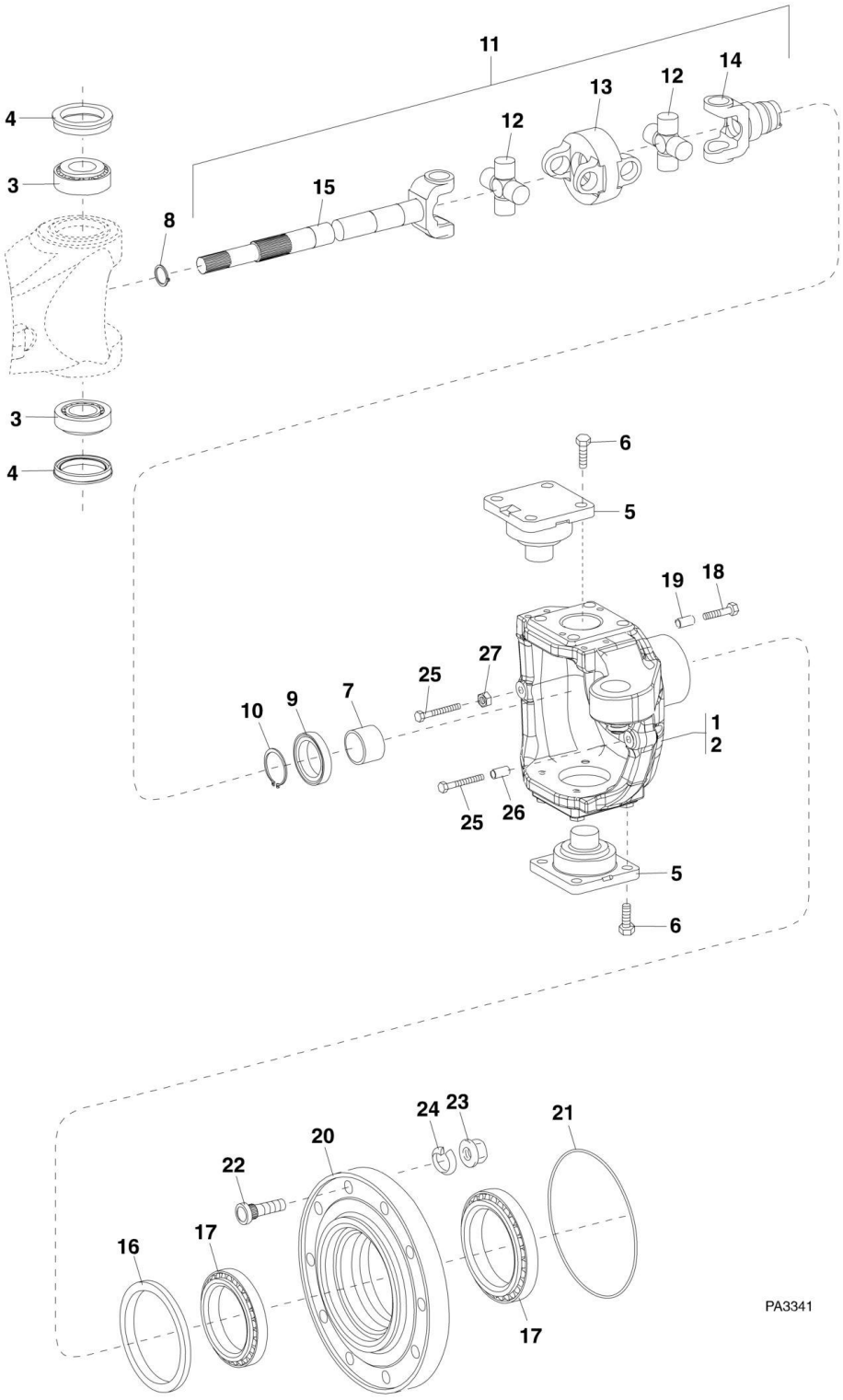

FIGURE 5-17. FRONT AXLE - JOINT HOUSING (644E SN 0160039830 to Present, Including 0160036724, 0160036811, 0160036907 and 0160037012; 944E SN 0160040124 to Present, Including 0160034634, 0160036710, 0160036722, 0160036735 and 0160036738)

ITEM	PART NUMBER	QTY	DESCRIPTION	REV
1	70022237	1	JOINT HOUSING, (left side)	
2	70022238	1	JOINT HOUSING, (right side)	
3	70022223	4	ROLLER BEARING	
4	1319447	4	SHAFT SEAL	
5	70022240	4	BEARING PIN	
6	1319464	16	HEX SCREW, M16X40	
7	70022179	2	BUSHING	
8	10731789	2	RETAINING RING	
9	70022218	2	SHAFT SEAL	
10	1321226	2	RETAINING RING	
11	70022170	2	UNIVERSAL COUPLING DRIVE SHAFT ASSY, (644E), (includes items 12 thru 15)	
11	70022265	2	UNIVERSAL COUPLING DRIVE SHAFT ASSY, (944E), (includes items 12 thru 15)	
12	70021554	2	JOINT CROSS, (644E)	
12	70021790	2	JOINT CROSS, (944E)	
13	70021553	1	CENTRAL PIECE, (644E)	
13	70021789	1	CENTRAL PIECE, (944E)	
14	70022187	1	FORK SHAFT, (644E)	
14	70022266	1	FORK SHAFT, (944E)	
15	70022188	1	FORK SHAFT, (644E)	
15	70022267	1	FORK SHAFT, (944E)	
16	80304173	2	SHAFT SEAL	
17	1319472	4	ROLLER BEARING	
18	70022208	16	HEX SCREW, M14X70	
19	70022234	16	CENTERING BUSHING	
20	70022249	2	HUB	
21	70022203	2	O-RING	
22	70022230	20	WHEEL BOLT	
23		Ref	WHEEL NUT, (See DRIVE TRAIN COMPONENTS for Breakdown)	
24		Ref	SPRING WASHER, (See DRIVE TRAIN COMPONENTS for Breakdown)	
25	8036330	4	STOP SCREW, M14X1.5	
26	70022257	2	SPACER TUBE	
27	1319477	2	HEX NUT, M14X1.5	

FIGURE 5-18. FRONT AXLE - PLANETARY DRIVE (Prior to SN 0160039830, Excluding 0160036724, 0160036811, 0160036907 and 0160037012)

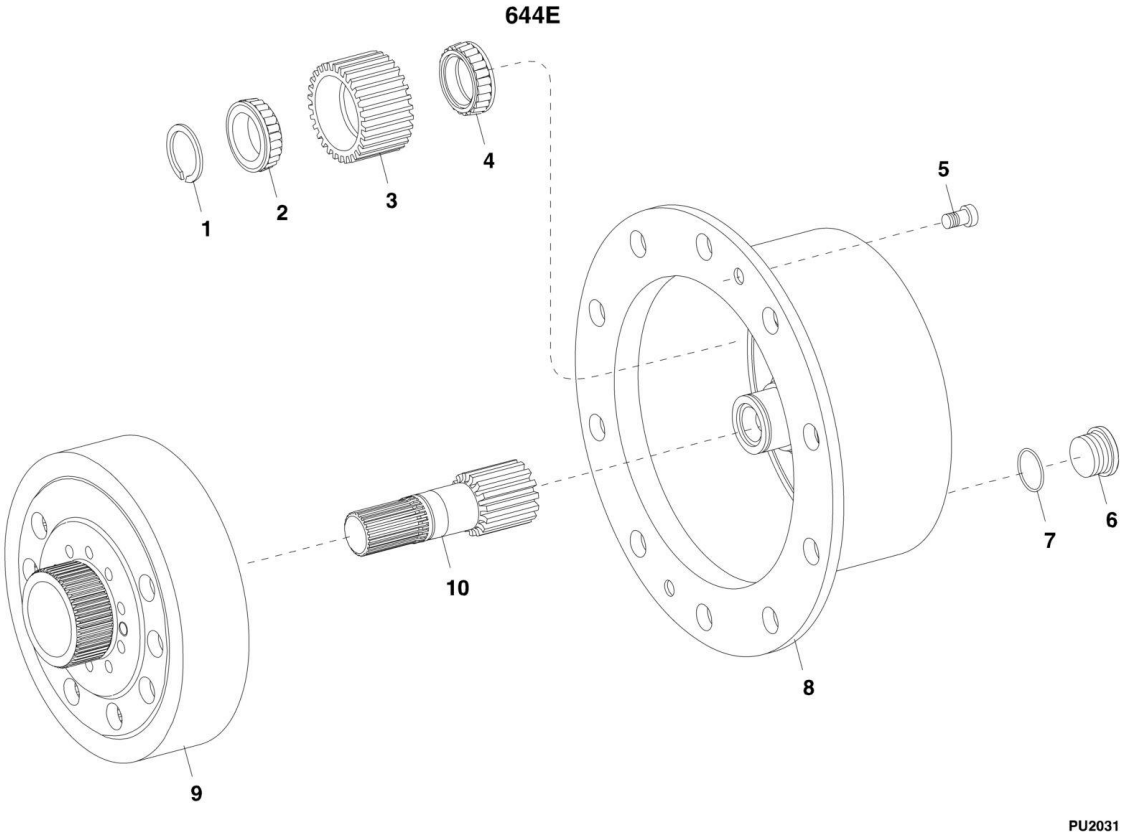

FIGURE 5-18. FRONT AXLE - PLANETARY DRIVE (Prior to SN 0160039830, Excluding 0160036724, 0160036811, 0160036907 and 0160037012)

ITEM	PART NUMBER	QTY	DESCRIPTION	REV
1	1319485	6	SNAP RING	
2	1319484	6	INNER RING BEARING	
3	1321231	6	PLANET GEAR	
4	1319483	6	INNER RING BEARING	
5	1319488	4	CAP SCREW	
6	1319506	2	SCREW PLUG	
7	8036331	2	O-RING	
8	8036436	2	PLANET CARRIER	
9	1321247	2	RING GEAR	
10	1321242	2	SUN GEAR SHAFT	
	70021555	1	PLANET CARRIES ASSY (includes items 3, 4, 5 & 8)	

FIGURE 5-19. FRONT AXLE - PLANETARY DRIVE (Prior to SN 0160040124, Excluding 0160034634, 0160036710, 0160036722, 0160036735 and 0160036738)

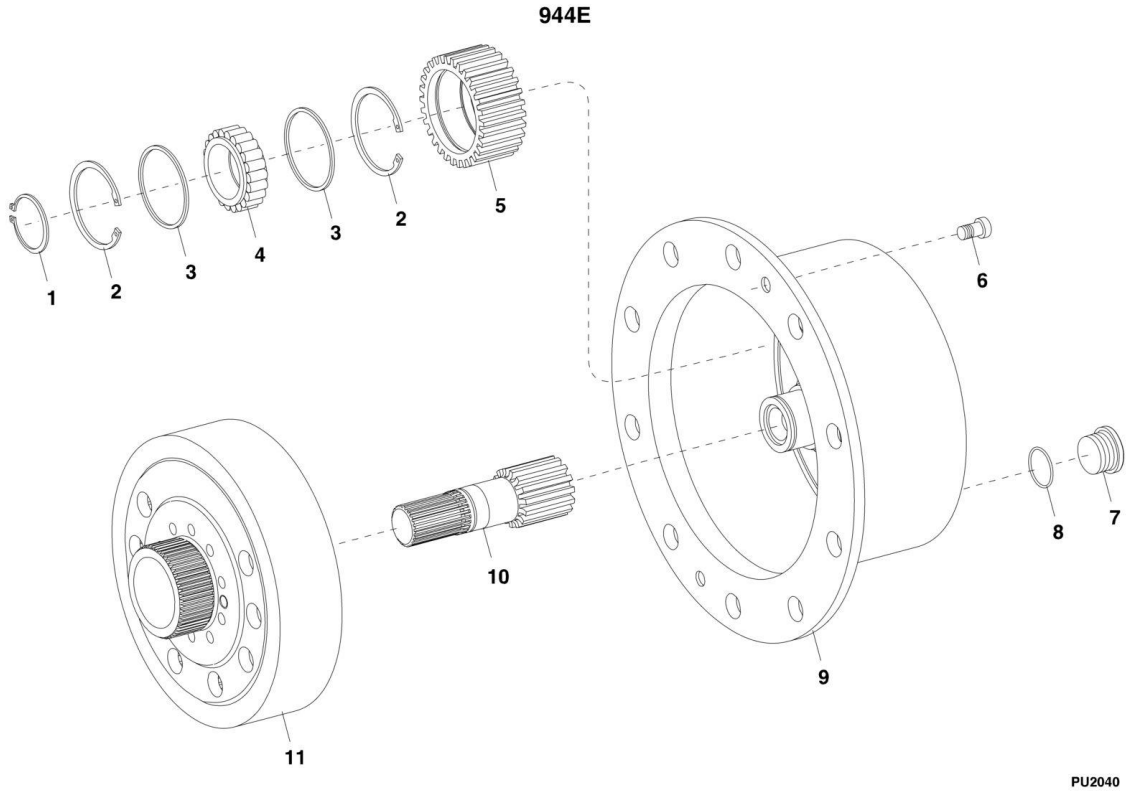

FIGURE 5-19. FRONT AXLE - PLANETARY DRIVE (Prior to SN 0160040124, Excluding 0160034634, 0160036710, 0160036722, 0160036735 and 0160036738)

ITEM	PART NUMBER	QTY	DESCRIPTION	REV
1	80304227	3	RETAINING RING	
2	1321205	6	SNAP RING	
3	1321191	6	WASHER	
4	1321214	3	ROLLER BEARING	
5	1321233	3	PLANET GEAR	
6	8035977	2	CAP SCREW	
7	1319506	1	SCREW PLUG	
8	8036331	1	O-RING	
9	1321232	1	PLANET CARRIER	
10	1321255	1	SUN GEAR SHAFT	
11	1321258	1	RING GEAR	

FIGURE 5-20. FRONT AXLE - PLANETARY DRIVE (644E SN 0160039830 to Present, Including 0160036724, 0160036811, 0160036907 and 0160037012; 944E SN 0160040124 to Present, Including 0160034634, 0160036710, 0160036722, 0160036735 and 0160036738)

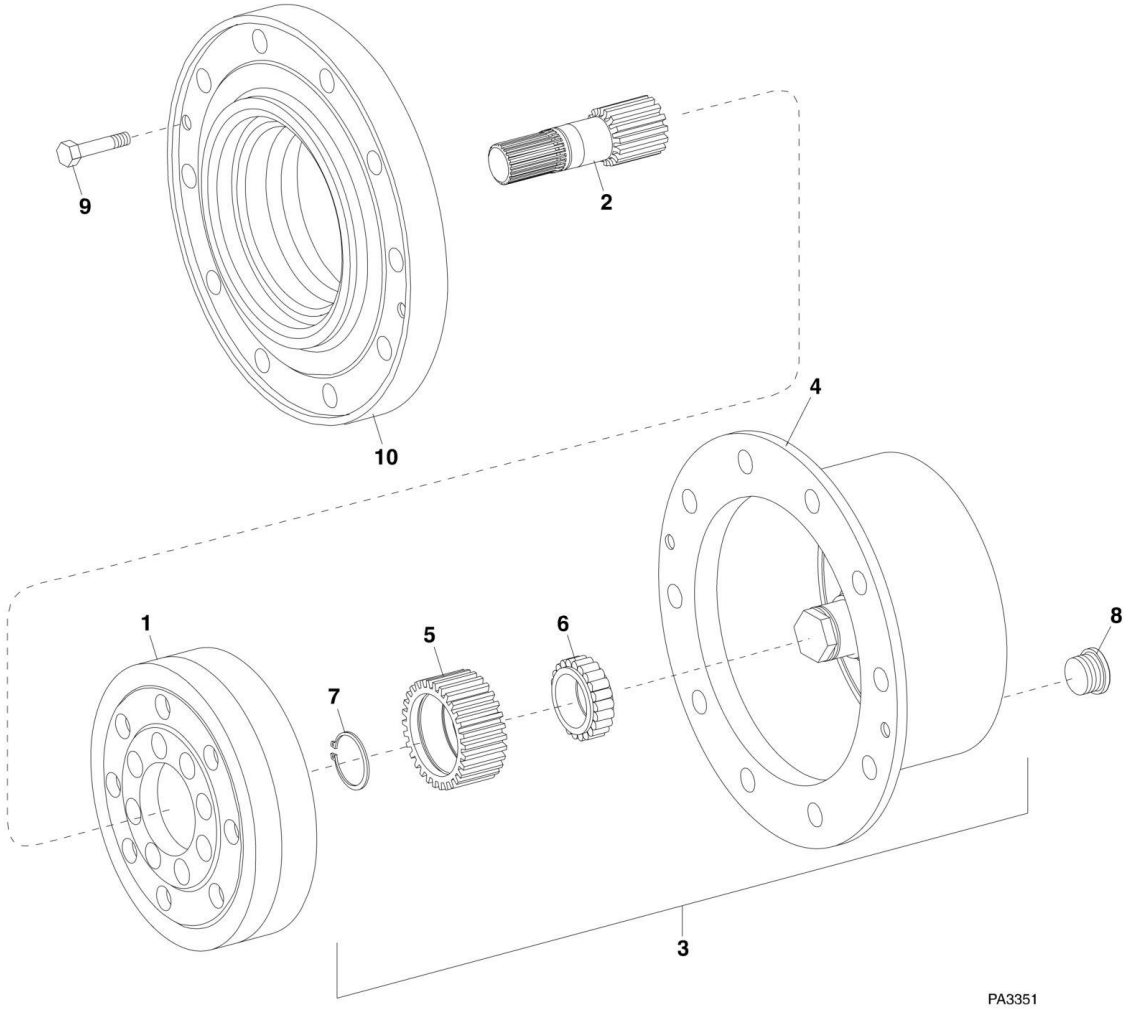

FIGURE 5-20. FRONT AXLE - PLANETARY DRIVE (644E SN 0160039830 to Present, Including 0160036724, 0160036811, 0160036907 and 0160037012; 944E SN 0160040124 to Present, Including 0160034634, 0160036710, 0160036722, 0160036735 and 0160036738)

ITEM	PART NUMBER	QTY	DESCRIPTION	REV
1	70022242	1	RING GEAR, (644E)	
1	70022274	1	RING GEAR, (944E)	
2	70022239	2	SUN GEAR SHAFT, (644E)	
2	70022278	2	SUN GEAR SHAFT, (944E)	
3	70022233	2	PLANETARY CARRIER ASSY, (644E), (includes items 4 thru 7)	
3	70022273	2	PLANETARY CARRIER ASSY, (944E), (includes items 4 thru 7)	
4	70022256	1	PLANETARY CARRIER, (644E)	
4	70022279	1	PLANETARY CARRIER, (944E)	
5	70022243	3	PLANETARY GEAR, (644E)	
5	70022271	3	PLANETARY GEAR, (944E)	
6	70022221	3	CYL. ROLLER BEARING, (644E)	
6	70022270	3	CYL. ROLLER BEARING, (944E)	
7	70022197	3	RETAINING RING	
8	1319578	2	SCREW PLUG	
9	70022207	4	HEX SCREW, M12X30	
10		Ref	HUB, (See FRONT AXLE - JOINT HOUSING for Breakdown)	

FIGURE 5-21. REAR AXLE

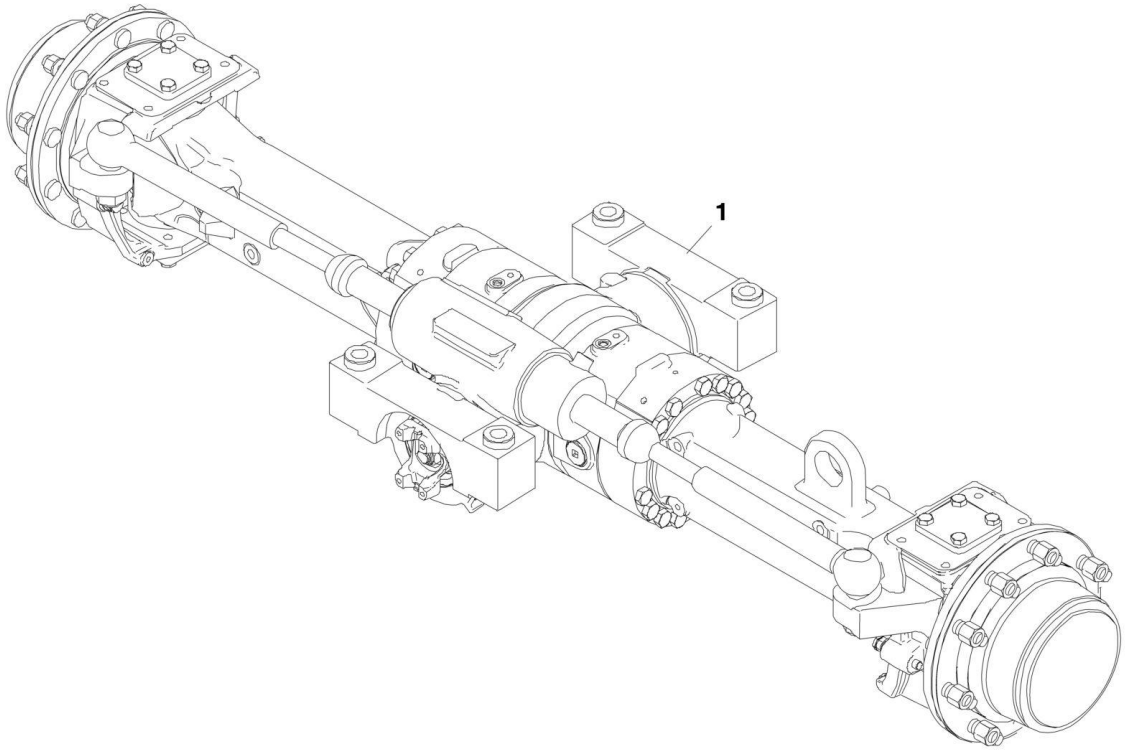

FIGURE 5-21. REAR AXLE

ITEM	PART NUMBER	QTY	DESCRIPTION	REV
1	8040284	1	REAR AXLE, (644E) **(Prior to SN 0160039830, Excluding 0160036724, 0160036811, 0160036907 and 0160037012)**	B
1	8040287	1	REAR AXLE, (944E) **(Prior to SN 0160040124, Excluding 0160034634, 0160036710, 0160036722, 0160036735 and 0160036738)**	B
1	1001103631	1	REAR AXLE **(644E SN 0160039830 to Present, Including 0160036724, 0160036811, 0160036907 and 0160037012; 944E SN 0160040124 through 0160041823, Including 0160034634, 0160036710, 0160036722, 0160036735 and 0160036738)**	D
1	1001132240	1	REAR AXLE, (944E) **(SN 0160041827 to Present)**	A
1		Ref	INPUT, (See REAR AXLE – INPUT for Breakdown)	
1		Ref	DIFFERENTIAL, (See REAR AXLE – DIFFERENTIAL for Breakdown)	
1		Ref	AXLE CASING, (See REAR AXLE – CASING for Breakdown)	
1		Ref	M-DISC BRAKE, (See REAR AXLE - M-DISC BRAKE for Breakdown)	
1		Ref	BRAKE, (See REAR AXLE – BRAKE for Breakdown)	
1		Ref	JOINT HOUSING, (See REAR AXLE - JOINT HOUSING for Breakdown)	
1		Ref	PLANETARY DRIVE, (See REAR AXLE - PLANETARY DRIVE for Breakdown)	

FIGURE 5-22. REAR AXLE - INPUT (644E Prior to SN 0160039830, Excluding 0160036724, 0160036811, 0160036907 and 0160037012; 944E Prior to SN 0160040124, Excluding 0160034634, 0160036710, 0160036722, 0160036735 and 0160036738)

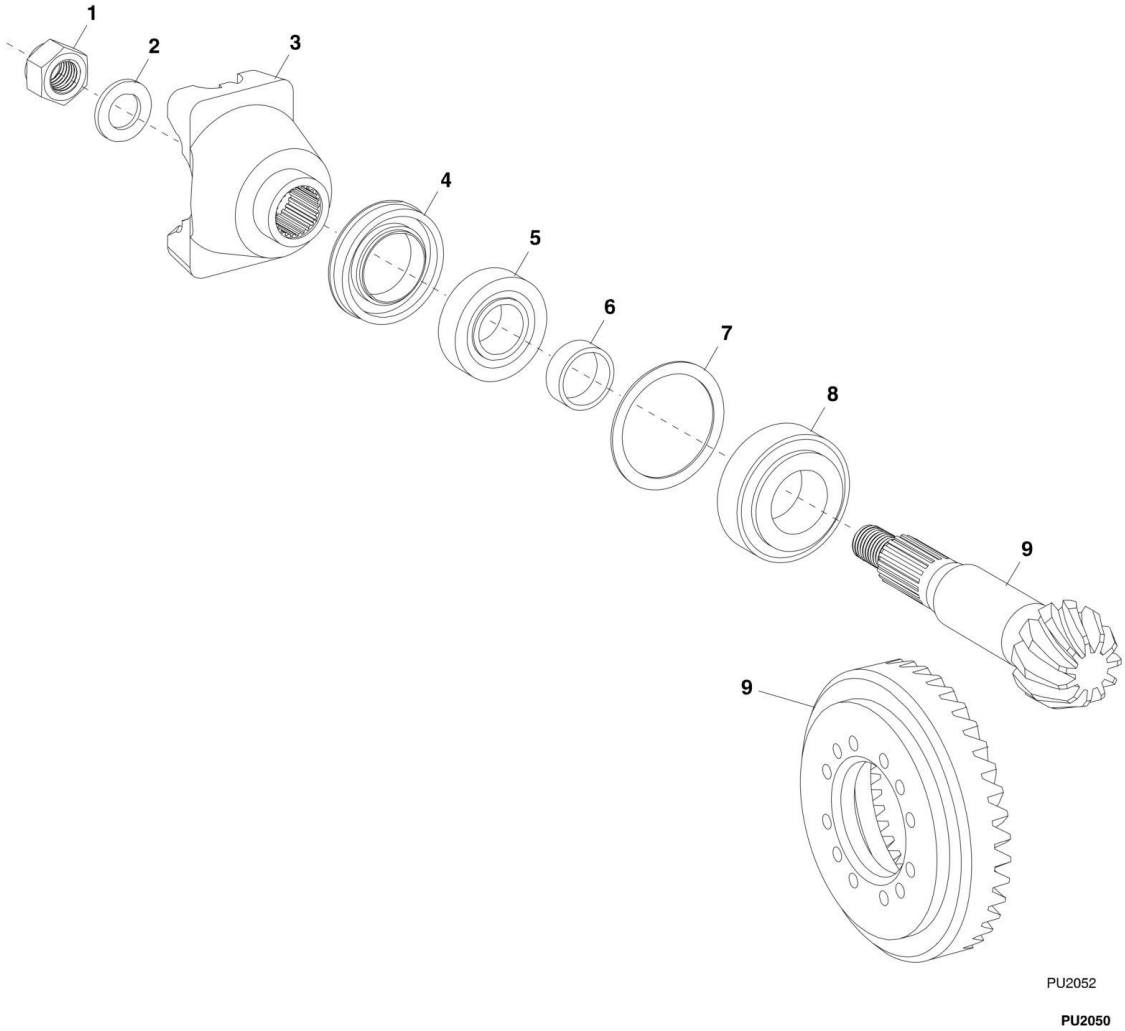

FIGURE 5-22. REAR AXLE - INPUT (644E Prior to SN 0160039830, Excluding 0160036724, 0160036811, 0160036907 and 0160037012; 944E Prior to SN 0160040124, Excluding 0160034634, 0160036710, 0160036722, 0160036735 and 0160036738)

ITEM	PART NUMBER	QTY	DESCRIPTION	REV
1	8035983	1	HEX NUT	
2	1319406	1	WASHER	
3	1321237	1	END YOKE	
4	1321211	1	SEAL SHAFT	
5	1319444	1	ROLLER BEARING	
6	1319354	1	RING, 15.1mm	
6	1319355	1	RING, 15.2mm	
6	1319356	1	RING, 15.3mm	
6	1319357	1	RING, 15.4mm	
6	1319358	1	RING, 15.5mm	
6	1319359	1	RING, 15.6mm	
6	1319360	1	RING, 15.7mm	
6	1319361	1	RING, 15.8mm	
6	1319362	1	RING, 15.9mm	
6	1319363	1	RING, 16.0mm	
6	1319364	1	RING, 16.1mm	
6	1319365	1	RING, 16.2mm	
6	1319366	1	RING, 16.3mm	
6	1319367	1	RING, 16.4mm	
6	8035982	1	RING, 16.26mm	
6	1319369	1	RING, 16.23mm	
6	1319370	1	RING, 16.16mm	
6	1319371	1	RING, 16.13mm	
6	1319372	1	RING, 16.06mm	
6	1319373	1	RING, 16.03mm	
6	1319374	1	RING, 15.96mm	
6	1319375	1	RING, 15.93mm	
6	1319376	1	RING, 15.86mm	
6	1319377	1	RING, 15.83mm	
6	1319378	1	RING, 15.76mm	
6	1319379	1	RING, 15.73mm	
6	1319380	1	RING, 15.66mm	
6	1319381	1	RING, 15.63mm	
6	1319382	1	RING, 15.56mm	
6	1319383	1	RING, 15.53mm	
6	1319384	1	RING, 15.46mm	
6	1319385	1	RING, 15.43mm	
6	1319386	1	RING, 15.36mm	
6	1319387	1	RING, 15.33mm	
6	1319388	1	RING, 15.26mm	
6	1319389	1	RING, 15.38mm	
6	1319390	1	RING, 15.48mm	
6	1319391	1	RING, 15.58mm	
6	1319392	1	RING, 15.68mm	
6	1319393	1	RING, 15.69mm	
6	1319394	1	RING, 15.72mm	
6	1319395	1	RING, 15.78mm	
6	1319396	1	RING, 15.81mm	

ITEM	PART NUMBER	QTY	DESCRIPTION	REV
6	1319397	1	RING, 15.84mm	
6	1319398	1	RING, 15.88mm	
6	1319399	1	RING, 15.89mm	
6	1319400	1	RING, 15.91mm	
6	1319401	1	RING, 15.94mm	
6	1319402	1	RING, 15.97mm	
7	1319333	AR	SHIM, 1.0mm	
7	1319334	AR	SHIM, 1.05mm	
7	1319335	AR	SHIM, 1.1mm	
7	1319336	AR	SHIM, 1.15mm	
7	1319337	AR	SHIM, 1.2mm	
7	1319338	AR	SHIM, 1.25mm	
7	1319339	AR	SHIM, 1.3mm	
7	1319340	AR	SHIM, 1.35mm	
7	1319341	AR	SHIM, 1.4mm	
7	1319342	AR	SHIM, 1.45mm	
7	1319343	AR	SHIM, 1.5mm	
7	1319344	AR	SHIM, 1.55mm	
7	1319345	AR	SHIM, 1.6mm	
7	1319346	AR	SHIM, 0.9mm	
7	1319347	AR	SHIM, 0.95mm	
7	1319348	AR	SHIM, 0.65mm	
7	1319349	AR	SHIM, 0.70mm	
7	1319350	AR	SHIM, 0.75mm	
7	1319351	AR	SHIM, 0.85mm	
7	1319352	AR	SHIM, 0.80mm	
8	1319353	1	ROLLER BEARING	
9	8036751	1	BEVEL GEAR SET	

FIGURE 5-23. REAR AXLE - INPUT (644E SN 0160039830 to Present, Including 0160036724, 0160036811, 0160036907 and 0160037012; 944E SN 0160040124 through 0160041823, Including 0160034634, 0160036710, 0160036722, 0160036735 and 0160036738)

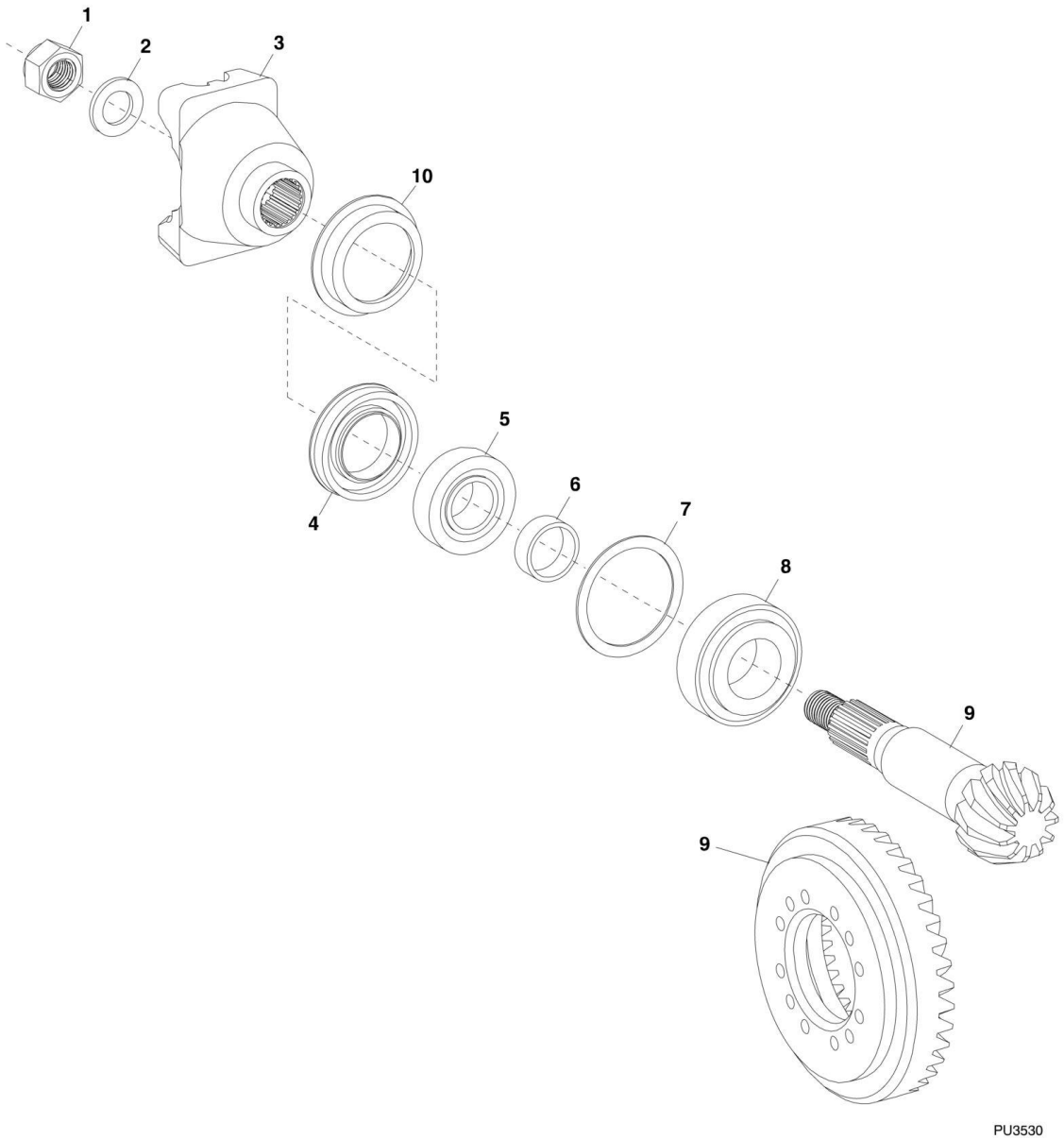

FIGURE 5-23. REAR AXLE - INPUT (644E SN 0160039830 to Present, Including 0160036724, 0160036811, 0160036907 and 0160037012; 944E SN 0160040124 through 0160041823, Including 0160034634, 0160036710, 0160036722, 0160036735 and 0160036738)

ITEM	PART NUMBER	QTY	DESCRIPTION	REV
1	70022213	1	HEX NUT	
2	80304082	1	WASHER	
3	70022245	1	END YOKE	
4	70022220	1	SEAL SHAFT	
5	1319353	1	ROLLER BEARING	
6	80304088	1	RING, S=16.0	
6	80304089	1	RING, S=16.1	
6	80304090	1	RING, S=16.2	
6	80304091	1	RING, S=16.3	
6	80304092	1	RING, S=16.4	
6	80304093	1	RING, S=16.5	
6	80304110	1	RING, S=16.56	
6	80304094	1	RING, S=16.6	
6	80304111	1	RING, S=16.62	
6	80304112	1	RING, S=16.64	
6	80304124	1	RING, S=16.66	
6	80304113	1	RING, S=16.68	
6	80304095	1	RING, S=16.7	
6	70022216	1	RING, S=16.72	
6	80304115	1	RING, S=16.74	
6	80304117	1	RING, S=16.76	
6	80304118	1	RING, S=16.78	
6	80304096	1	RING, S=16.8	
6	80304119	1	RING, S=16.82	
6	80304120	1	RING, S=16.84	
6	80304104	1	RING, S=16.86	
6	80304121	1	RING, S=16.88	
6	80304122	1	RING, S=16.9	
6	80304097	1	RING, S=16.92	
6	80304123	1	RING, S=16.94	
6	80304125	1	RING, S=16.96	
6	80304107	1	RING, S=16.98	
6	80304126	1	RING, S=17.0	
6	80304127	1	RING, S=17.02	
6	80304108	1	RING, S=17.04	
6	80304128	1	RING, S=17.06	
6	80304129	1	RING, S=17.08	
6	80304099	1	RING, S=17.10	
6	80304130	1	RING, S=17.12	
6	80304131	1	RING, S=17.14	
6	80304132	1	RING, S=17.16	
6	80304133	1	RING, S=17.18	
6	80304100	1	RING, S=17.2	
6	80304134	1	RING, S=17.22	
6	80304135	1	RING, S=17.24	
6	80304136	1	RING, S=17.26	
6	80304137	1	RING, S=17.28	
6	80304101	1	RING, S=17.3	

ITEM	PART NUMBER	QTY	DESCRIPTION	REV
6	80304102	1	RING, S=17.4	
7	80304160	1	SHIM, S=0.1	
7	80304159	1	SHIM, S=0.2	
7	80304158	1	SHIM, S=0.3	
7	80304157	1	SHIM, S=0.5	
7	80304156	1	SHIM, S=0.6	
7	80304162	1	SHIM, S=0.65	
7	80304155	1	SHIM, S=0.7	
7	80304161	1	SHIM, S=0.75	
7	80304154	1	SHIM, S=0.8	
7	80304153	1	SHIM, S=0.9	
7	80304152	1	SHIM, S=1.0	
7	80304146	1	SHIM, S=1.2	
7	80304163	1	SHIM, S=1.25	
7	80304151	1	SHIM, S=1.3	
7	80304164	1	SHIM, S=1.35	
7	80304150	1	SHIM, S=1.4	
7	80304165	1	SHIM, S=1.45	
7	80304145	1	SHIM, S=1.5	
7	80304166	1	SHIM, S=1.55	
7	80304149	1	SHIM, S=1.6	
7	80304167	1	SHIM, S=1.65	
7	80304148	1	SHIM, S=1.7	
7	80304168	1	SHIM, S=1.75	
7	80304144	1	SHIM, S=1.8	
7	80304169	1	SHIM, S=1.85	
7	80304147	1	SHIM, S=1.9	
7	80304143	1	SHIM, S=2.0	
8	70023400	1	ROLLER BEARING	
9	70022280	1	BEVEL GEAR SET	
10	70022244	1	SCREEN SHEET	

FIGURE 5-24. REAR AXLE - INPUT 944E (SN 0160041827 to Present)

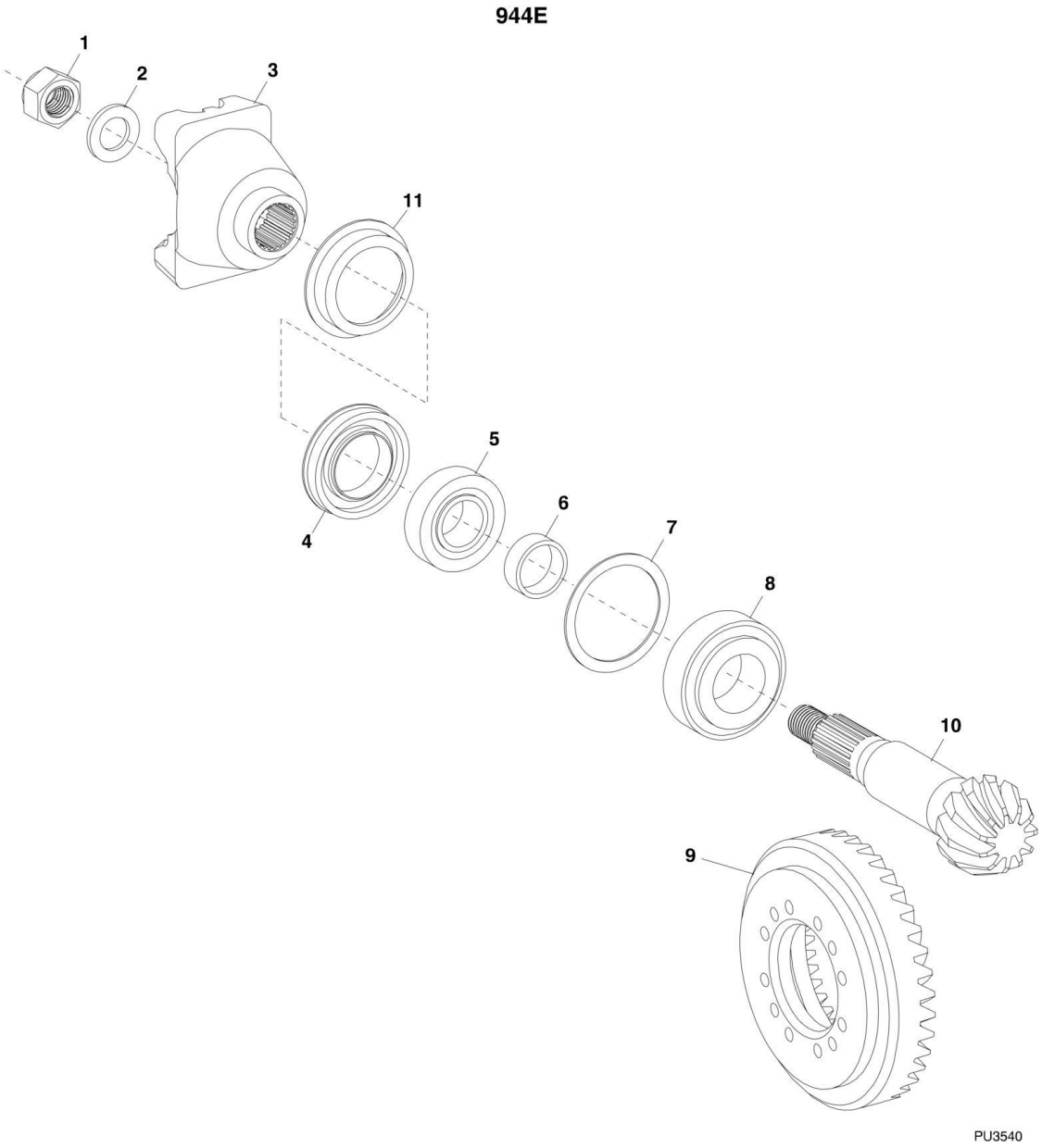

FIGURE 5-24. REAR AXLE - INPUT 944E (SN 0160041827 to Present)

ITEM	PART NUMBER	QTY	DESCRIPTION	REV
1	70022213	1	HEX NUT	
2	80304082	1	WASHER	
3	70022245	1	END YOKE	
4	70022220	1	SEAL SHAFT	
5	1319353	1	ROLLER BEARING	
6	80304088	AR	RING, S=16	
6	80304089	AR	RING, S=16.1	
6	80304090	AR	RING, S=16.2	
6	80304091	AR	RING, S=16.3	
6	80304092	AR	RING, S=16.4	
6	80304093	AR	RING, S=16.5	
6	80304110	AR	RING, S=16.56	
6	80304094	AR	RING, S=16.6	
6	80304111	AR	RING, S=16.62	
6	80304112	AR	RING, S=16.64	
6	80304124	AR	RING, S=16.66	
6	80304113	AR	RING, S=16.68	
6	80304095	AR	RING, S=16.7	
6	70022216	AR	RING, S=16.72	
6	80304115	AR	RING, S=16.74	
6	80304117	AR	RING, S=16.76	
6	80304118	AR	RING, S=16.78	
6	80304096	AR	RING, S=16.8	
6	80304119	AR	RING, S=16.82	
6	80304120	AR	RING, S=16.84	
6	80304104	AR	RING, S=16.86	
6	80304121	AR	RING, S=16.88	
6	80304122	AR	RING, S=16.9	
6	80304097	AR	RING, S=16.92	
6	80304123	AR	RING, S=16.94	
6	80304125	AR	RING, S=16.96	
6	80304107	AR	RING, S=16.98	
6	80304126	AR	RING, S=17.0	
6	80304127	AR	RING, S=17.02	
6	80304108	AR	RING, S=17.04	
6	80304128	AR	RING, S=17.06	
6	80304129	AR	RING, S=17.08	
6	80304099	AR	RING, S=17.1	
6	80304130	AR	RING, S=17.12	
6	80304131	AR	RING, S=17.14	
6	80304132	AR	RING, S=17.16	
6	80304133	AR	RING, S=17.18	
6	80304100	AR	RING, S=17.2	
6	80304134	AR	RING, S=17.22	
6	80304135	AR	RING, S=17.24	
6	80304136	AR	RING, S=17.26	
6	80304137	AR	RING, S=17.28	
6	80304101	AR	RING, S=17.3	
6	80304102	AR	RING, S=17.4	
7	80304160	1	SHIM, S=0.1	

ITEM	PART NUMBER	QTY	DESCRIPTION	REV
7	80304159	1	SHIM, S=0.2	
7	80304158	1	SHIM, S=0.3	
7	80304157	1	SHIM, S=0.5	
7	80304156	1	SHIM, S=0.6	
7	80304162	1	SHIM, S=0.65	
7	80304155	1	SHIM, S=0.7	
7	80304161	1	SHIM, S=0.75	
7	80304154	1	SHIM, S=0.8	
7	80304153	1	SHIM, S=0.9	
7	80304152	1	SHIM, S=1.0	
7	80304146	1	SHIM, S=1.2	
7	80304163	1	SHIM, S=1.25	
7	80304151	1	SHIM, S=1.3	
7	80304164	1	SHIM, S=1.35	
7	80304150	1	SHIM, S=1.4	
7	80304165	1	SHIM, S=1.45	
7	80304145	1	SHIM, S=1.5	
7	80304166	1	SHIM, S=1.55	
7	80304149	1	SHIM, S=1.6	
7	80304167	1	SHIM, S=1.65	
7	80304148	1	SHIM, S=1.7	
7	80304168	1	SHIM, S=1.75	
7	80304144	1	SHIM, S=1.8	
7	80304169	1	SHIM, S=1.85	
7	80304147	1	SHIM, S=1.9	
7	80304143	1	SHIM, S=2.0	
8	70023400	1	ROLLER BEARING	
9	70022786	1	BEVEL GEAR WHEEL	
10	70022787	1	BEVEL GEAR PINION	
11	70022244	1	SCREEN SHEET	

FIGURE 5-25. REAR AXLE - DIFFERENTIAL (644E Prior to SN 0160039830, Excluding 0160036724, 0160036811, 0160036907 and 0160037012; 944E Prior to SN 0160040124, Excluding 0160034634, 0160036710, 0160036722, 0160036735 and 0160036738)

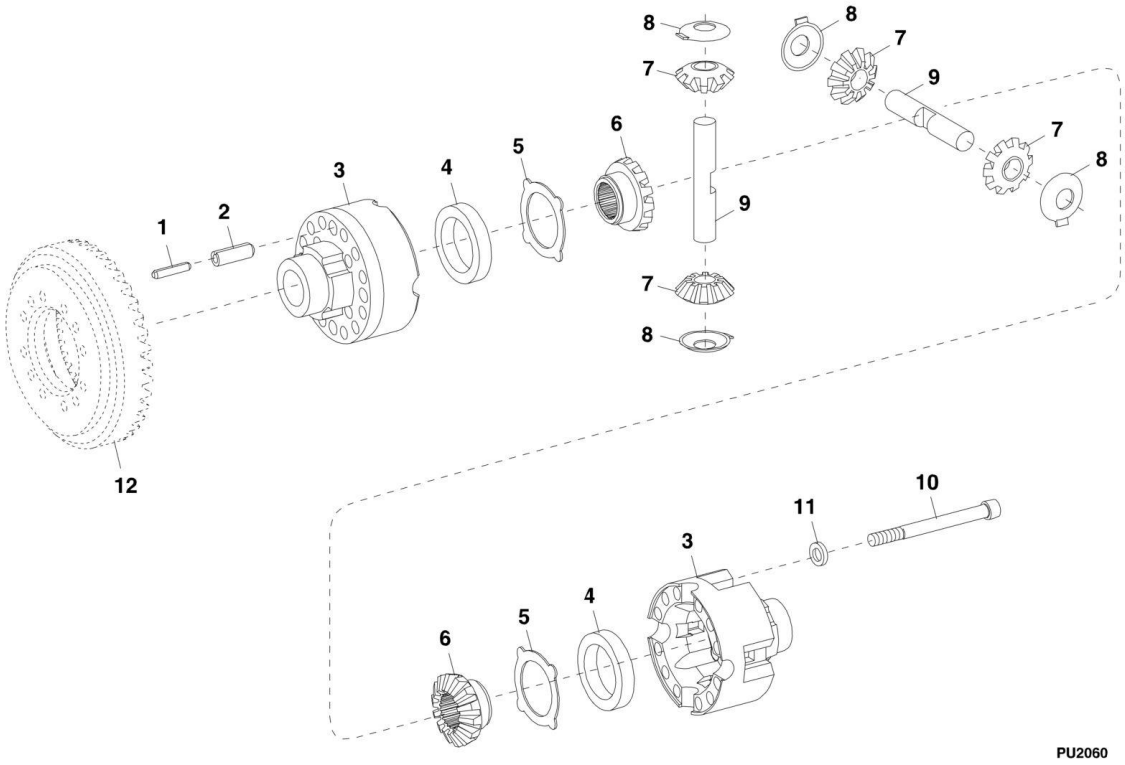

FIGURE 5-25. REAR AXLE - DIFFERENTIAL (644E Prior to SN 0160039830, Excluding 0160036724, 0160036811, 0160036907 and 0160037012; 944E Prior to SN 0160040124, Excluding 0160034634, 0160036710, 0160036722, 0160036735 and 0160036738)

ITEM	PART NUMBER	QTY	DESCRIPTION	REV
	7028976	1	DIFFERENTIAL ASSY, (includes items 1 thru 11)	
1	1321154	4	SLOT PIN	
2	1321153	4	SLOT PIN	
3	1321215	1	DIFFERENTIAL CASE	
4	1321260	2	DIFFERENTIAL RING, 13.7mm, (Axle) **(Prior to SN 708692)**	
4	8035984	2	DIFFERENTIAL RING, 13.6mm, (Axle) **(Prior to SN 708692)**	
4	1321259	2	DIFFERENTIAL RING, 13.5mm, (Axle) **(Prior to SN 708692)**	
5	1319412	2	THRUST WASHER	
6	8036752	2	AXLE BEVEL GEAR	
7	8036753	4	DIFFERENTIAL BEVEL GEAR, (Axle) **(Prior to SN 708692)**	
7	1319414	4	DIFFERENTIAL BEVEL GEAR, (Axle) **(SN 708692 to Present)**	
8	1319415	4	THRUST WASHER	
9	1321225	2	DIFFERENTIAL AXLE	
10	8035923	12	CAPSCREW	
11	1321184	12	WASHER	
12		Ref	BEVEL GEAR SET, (See REAR AXLE – INPUT for Breakdown)	

FIGURE 5-26. REAR AXLE - DIFFERENTIAL (644E SN 0160039830 to Present, Including 0160036724, 0160036811, 0160036907 and 0160037012; 944E SN 0160040124 to Present, Including 0160034634, 0160036710, 0160036722, 0160036735 and 0160036738)

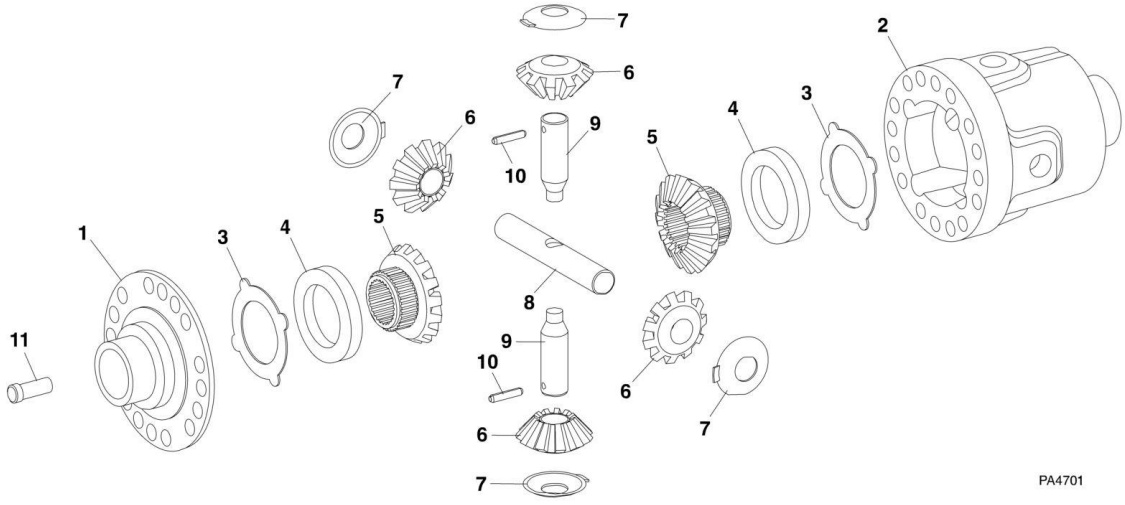

FIGURE 5-26. REAR AXLE - DIFFERENTIAL (644E SN 0160039830 to Present, Including 0160036724, 0160036811, 0160036907 and 0160037012; 944E SN 0160040124 to Present, Including 0160034634, 0160036710, 0160036722, 0160036735 and 0160036738)

ITEM	PART NUMBER	QTY	DESCRIPTION	REV
1	70022229	1	COVER	
2	70022226	1	DIFFERENTIAL CASE **(Prior to SN 0160041827)**	
2	70023910	1	DIFFERENTIAL CASE **(SN 0160041827 to Present)**	
3	70022284	2	THRUST WASHER	
4	70022285	2	DIFFERENTIAL RING, A=15.0	
5	70022225	2	AXLE BEVEL GEAR	
6	70022185	4	DIFFERENTIAL BEVEL GEAR	
7	70022262	4	THRUST WASHER	
8	70022227	1	DIFFERENTIAL AXLE	
9	70022228	2	DIFFERENTIAL AXLE	
10	70022200	2	SLOT PIN **(Prior to SN 0160041827)**	
10	70023904	2	SLOT PIN **(SN 0160041827 to Present)**	
11	70022211	16	CAPSCREW	

FIGURE 5-27. REAR AXLE - AXLE CASING (644E Prior to SN 0160039830, Excluding 0160036724, 0160036811, 0160036907 and 0160037012; 944E Prior to SN 0160040124, Excluding 0160034634, 0160036710, 0160036722, 0160036735 and 0160036738)

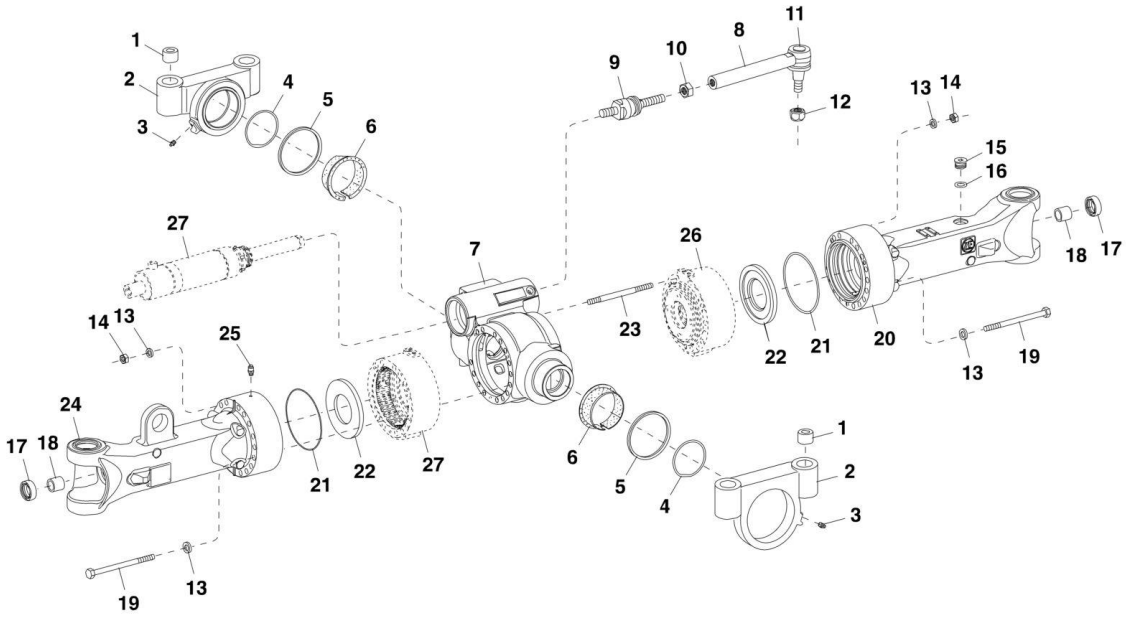

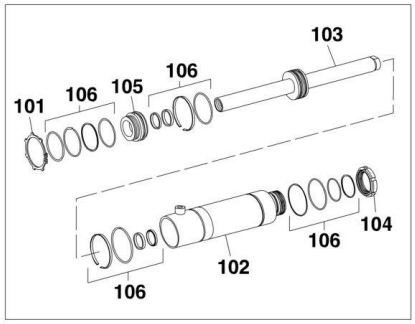

644E PRIOR TO AXLE SN 949464
944E PRIOR TO AXLE SN 958546

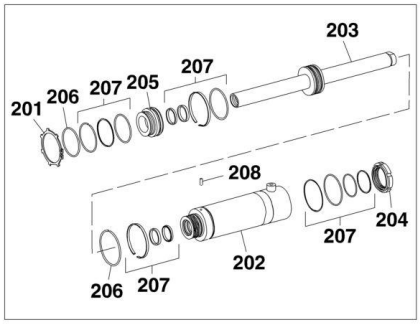

644E AXLE SN 949464 TO PRESENT
944E AXLE SN 958546 TO PRESENT

PU2072

FIGURE 5-27. REAR AXLE - AXLE CASING (644E Prior to SN 0160039830, Excluding 0160036724, 0160036811, 0160036907 and 0160037012; 944E Prior to SN 0160040124, Excluding 0160034634, 0160036710, 0160036722, 0160036735 and 0160036738)

ITEM	PART NUMBER	QTY	DESCRIPTION	REV
1	1319441	4	CENTERING BUSHING	
2	8035933	2	BRACKET	
3	1319423	2	GREASE FITTING	
4	1319439	2	O-RING	
5	1319440	2	V-RING	
6	8036419	2	FLANGE BUSHING	
7	70021111	1	AXLE DRIVE HOUSING	
8	1321148	2	TRACK ROD, (includes items 9 thru 12)	
9	8036757	2	AXIAL JOINT COUPLING	
10	8036759	2	HEX NUT	
11	8036756	2	BALL JOINT WITH PIPE COUPLING	
12	8036758	2	LOCKING NUT	
13	8036312	30	WASHER	
14	1319429	8	HEX NUT	
15	1319506	1	SCREW PLUG	
16	8036331	1	O-RING	
17	7027211	2	SHAFT SEAL	
18	1319433	2	BUSHING	
19	8035927	22	HEX SCREW	
20	8035987	1	AXLE CASING, (right rear)	
21	1319425	2	O-RING	
22	8036606	2	END SHIM, (Axle) **(Prior to SN 679469)**	
22	70020413	2	END SHIM, (Axle) **(SN 679469 to Present)**	
23	8036313	8	STUD	
24	8035986	1	AXLE CASING, (left rear)	
25	1319436	1	BREATHER	
26		Ref	BRAKE HOUSING, (See REAR AXLE - M-DISC BRAKE for Breakdown)	
27		Ref	STEERING CYLINDER, (no longer available, use 70021617 for replacement or items 101 thru 106 for service), (644E Axle and 944E Axle) **(644E Prior to SN 1277813; 944E Prior to SN 974122)**	
101	N.S.S.	1	L-RING	
102	N.S.S.	1	TUBE WELDMENT	
103	N.S.S.	1	PISTON ROD	
104	8035998	1	SLOTTED NUT	
105	N.S.S.	1	GUIDE PIECE	
106	8035981	1	SEAL KIT	
	70021617	1	STEERING CYLINDER, (includes items 201 thru 208), (644E Axle and 944E Axle) **(644E SN 1277813 to Present; 944E SN 974122 to Present)**	
201	70021571	1	L-RING	
202	N.S.S.	1	CYLINDER TUBE	
203	70021568	1	PISTON ROD	
204	70021570	1	SLOTTED NUT	
205	70021569	1	GUIDE PIECE	
206	70021726	2	RETAINING RING	
207	70021495	1	SEAL KIT	
208	70022610	1	SLOTTED PIN	

FIGURE 5-28. REAR AXLE - AXLE CASING (644E SN 0160039830 to Present, Including 0160036724, 0160036811, 0160036907 and 0160037012; 944E SN 0160040124 to Present, Including 0160034634, 0160036710, 0160036722, 0160036735 and 0160036738)

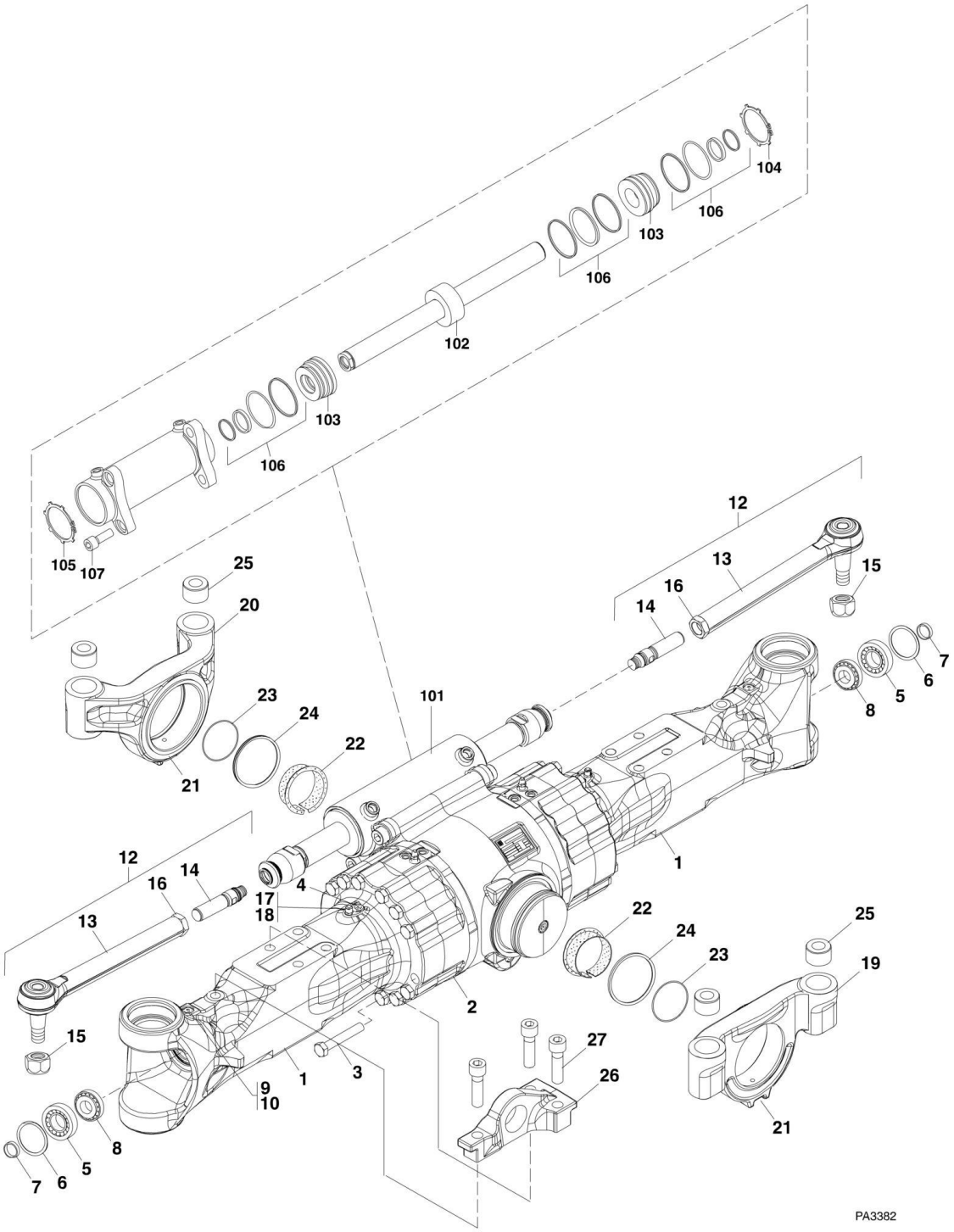

FIGURE 5-28. REAR AXLE - AXLE CASING (644E SN 0160039830 to Present, Including 0160036724, 0160036811, 0160036907 and 0160037012; 944E SN 0160040124 to Present, Including 0160034634, 0160036710, 0160036722, 0160036735 and 0160036738)

ITEM	PART NUMBER	QTY	DESCRIPTION	REV
1	70022255	2	AXLE CASING	
2	70022259	1	AXLE DRIVE HOUSING	
3	70022206	28	HEX HD CAPSCREW, M18X180	
4	1319578	4	SCREW PLUG **(Prior to SN 0160041827)**	
4	70023404	4	SCREW PLUG **(SN 0160041827 to Present)**	
5	70022241	2	BUSHING	
6	70022204	2	O-RING	
7	70022217	2	RING	
8	10731790	2	BEARING	
9	70022201	2	SET SCREW, M10X1X16 **(Prior to SN 0160041827)**	
9	70023905	2	SET SCREW **(SN 0160041827 to Present)**	
10	1319666	2	SCREW PLUG **(Prior to SN 0160041827)**	
10	70023906	2	WASHER **(SN 0160041827 to Present)**	
10	70023907	2	HEX NUT **(SN 0160041827 to Present)**	
12	70022174	2	TIE ROD, (includes items 13 thru 16)	
13	70022175	1	BALL JOINT	
14	70022172	1	AXIAL JOINT	
15	8036758	1	LOCKNUT	
16	8036759	1	HEX NUT	
17	1319436	1	BREATHER	
18	8036418	1	SCREW PLUG	
19	70022246	1	BRACKET	
20	70022247	1	BRACKET	
21	1319423	2	GREASE FITTING	
22	70022182	2	FLANGE BUSHING	
23	70022205	2	O-RING	
24	70022219	2	V-RING	
25	1319441	4	BUSHING	
26	70022254	1	BRACKET	
27	1001103619	3	HEX HD CAPSCREW, M22X80	
101	70022173	1	STEERING CYLINDER, (includes items 102 thru 106)	
102	70022177	1	PISTON ROD	
103	70022184	2	BREAK HEAD	
104	70022181	2	RETAINING RING	
105	70022180	2	RETAINING RING	
106	70022178	1	SEAL KIT	
107	70022789	4	CAPSCREW, M22X55	

FIGURE 5-29. REAR AXLE - M-DISC BRAKE (644E Prior to SN 0160039830, Excluding 0160036724, 0160036811, 0160036907 and 0160037012; 944E Prior to SN 0160040124, Excluding 0160034634, 0160036710, 0160036722, 0160036735 and 0160036738)

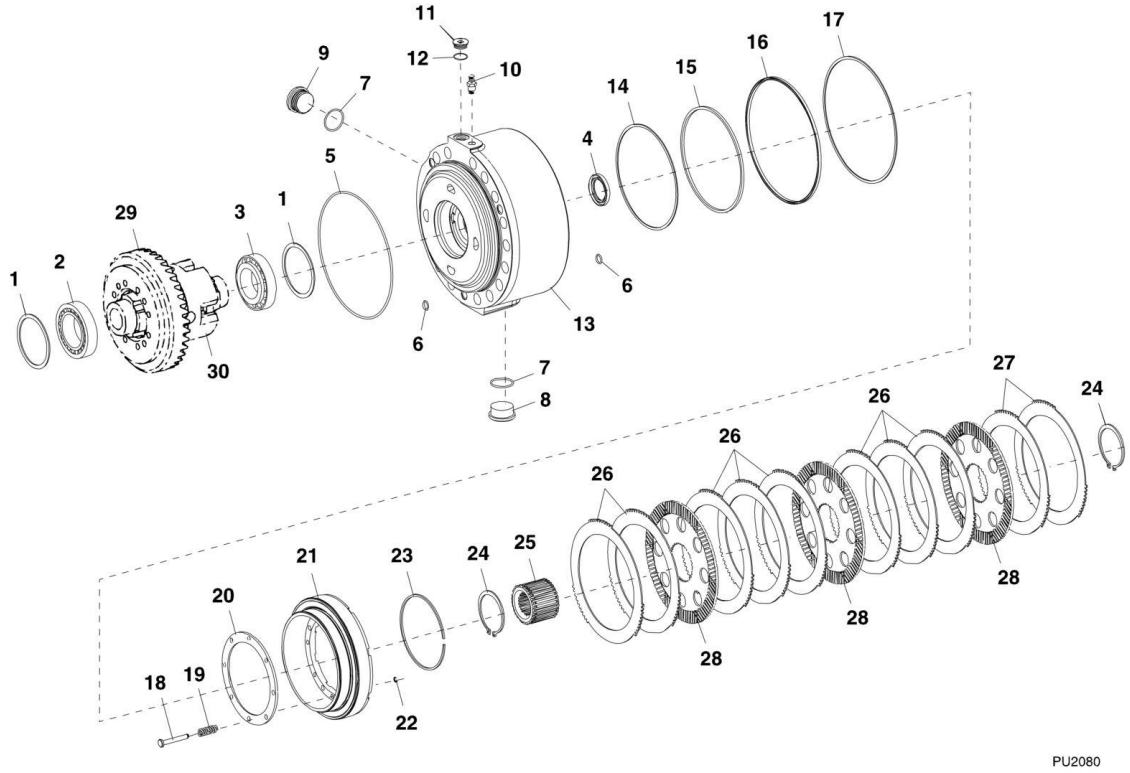

FIGURE 5-29. REAR AXLE - M-DISC BRAKE (644E Prior to SN 0160039830, Excluding 0160036724, 0160036811, 0160036907 and 0160037012; 944E Prior to SN 0160040124, Excluding 0160034634, 0160036710, 0160036722, 0160036735 and 0160036738)

ITEM	PART NUMBER	QTY	DESCRIPTION	REV
1	1319531	AR	SHIM, 0.1mm	
1	8035945	AR	SHIM, 0.15mm	
1	1319530	AR	SHIM, 0.2mm	
1	8035946	AR	SHIM, 0.25	
1	1319529	AR	SHIM, 0.3mm	
1	8035947	AR	SHIM, 0.35mm	
1	8035951	AR	SHIM, 0.4mm	
1	1319543	AR	SHIM, 0.45mm	
1	1319527	AR	SHIM, 0.5mm	
1	1321158	AR	SHIM, 0.55mm	
1	1319526	AR	SHIM, 0.6mm	
1	1319532	AR	SHIM, 0.65mm	
1	1319533	AR	SHIM, 0.7mm	
1	1319534	AR	SHIM, 0.75mm	
1	1319525	AR	SHIM, 0.8mm	
1	1319535	AR	SHIM, 0.85mm	
1	1319536	AR	SHIM, 0.9mm	
1	1319537	AR	SHIM, 0.95mm	
1	1319524	AR	SHIM, 1.0mm	
1	1319545	AR	SHIM, 1.05mm	
1	1319538	AR	SHIM, 1.10mm	
1	1319539	AR	SHIM, 1.15mm	
1	1319523	AR	SHIM, 1.20mm	
1	1319540	AR	SHIM, 1.25mm	
1	1319541	AR	SHIM, 1.30mm	
1	1319542	AR	SHIM, 1.35mm	
1	1319522	AR	SHIM, 1.40mm	
1	1319521	AR	SHIM, 1.45mm	
1	1319520	AR	SHIM, 1.50mm	
1	1319519	AR	SHIM, 1.55mm	
1	1319518	AR	SHIM, 1.60mm	
1	8035948	AR	SHIM, 1.63mm	
1	1319517	AR	SHIM, 1.65mm	
1	1319510	AR	SHIM, 2.0mm	
1	1321159	AR	SHIM, 1.47mm	
1	1319516	AR	SHIM, 1.70mm	
1	1319515	AR	SHIM, 1.75mm	
1	1319514	AR	SHIM, 1.80mm	
1	1319513	AR	SHIM, 1.85mm	
1	1319512	AR	SHIM, 1.90mm	
1	1319511	AR	SHIM, 1.95mm	
2	8036447	2	ROLLER BEARING	
3	8036445	2	ROLLER BEARING	
4	8036444	2	SHAFT SEAL	
5	1319425	2	O-RING	
6	1319491	12	O-RING	
7	8036331	4	O-RING	
8	8036846	2	SCREW PLUG	

ITEM	PART NUMBER	QTY	DESCRIPTION	REV
9	1319506	2	SCREW PLUG	
10	1319505	2	BREATHER	
11	1319666	2	SCREW PLUG	
12	7027217	2	O-RING	
13	8035936	Ref	BRAKE HOUSING, (left side), (see note), (Axle) **(Prior to SN 679469)**	
13	70020483	1	BRAKE HOUSING, (left side), (Axle) **(SN 679469 to Present)**	
13	8035939	Ref	BRAKE HOUSING, (right side), (see note), (Axle) **(Prior to SN 679469)**	
13	70020484	1	BRAKE HOUSING, (right side), (Axle) **(SN 679469 to Present)**	
14	1321151	2	SUPPORT RING	
15	1321162	2	U-RING	
16	1321163	2	U-RING	
17	1321152	2	SUPPORT RING	
18	1319496	16	PIN	
19	1319497	16	COMPRESSION SPRING	
20	8036305	2	WASHER	
21	8036304	2	PISTON	
22	1319499	16	CRESCENT RING	
23	1319504	4	SNAP RING	
24	10731949	2	RETAINING RING	
25	1321174	2	DISC CARRIER, (Axle) **(Prior to SN 824742)**	
25	70020409	1	DISC CARRIER, (Axle) **(SN 824742 to Present)**	
26	1319502	16	O. CLUTCH DISC, 3.0mm, (Axle) **(Prior to SN 679469)**	
26	70020486	8	O. CLUTCH DISC, 2.5mm, (Axle) **(SN 679469 to Present)**	
26	70020487	8	O. CLUTCH DISC, 3.0mm, (Axle) **(SN 679469 to Present)**	
27	1319500	4	O. CLUTCH DISC, 2.0mm, (Axle) **(Prior to SN 679469)**	
27	70020485	4	O. CLUTCH DISC, 2.0mm, (Axle) **(SN 679469 to Present)**	
27	1319501	4	O. CLUTCH DISC, 2.5mm, (Axle) **(Prior to SN 679469)**	
27	70020486	4	O. CLUTCH DISC, 2.5mm, (Axle) **(SN 679469 to Present)**	
27	1319502	4	O. CLUTCH DISC, 3.0mm, (Axle) **(Prior to SN 679469)**	
27	70020487	4	O. CLUTCH DISC, 3.0mm, (Axle) **(SN 679469 to Present)**	
28	1321150	6	I. CLUTCH DISC, (Axle) **(Prior to SN 824742)**	
28	70020408	3	I. CLUTCH DISC, (Axle) **(SN 824742 to Present)**	
29		Ref	BEVEL GEAR SET, (See REAR AXLE – INPUT for Breakdown)	
30		Ref	DIFFERENTIAL ASSY, (See REAR AXLE – DIFFERENTIAL for Breakdown)	
N1	Note	Ref	**PARTS ARE NO LONGER AVAILABLE; ORDER BRAKE HOUSINGS 70020483 & 70020484, QUANTITY REQUIRED OF OUTER DISCS 70020485, 70020486 & 70020487, QUANTITY 2 OF 70020413 END PLATES.**	

FIGURE 5-30. REAR AXLE - M-DISC BRAKE (644E SN 0160039830 to Present, Including 0160036724, 0160036811, 0160036907 and 0160037012; 944E SN 0160040124 to Present, Including 0160034634, 0160036710, 0160036722, 0160036735 and 0160036738)

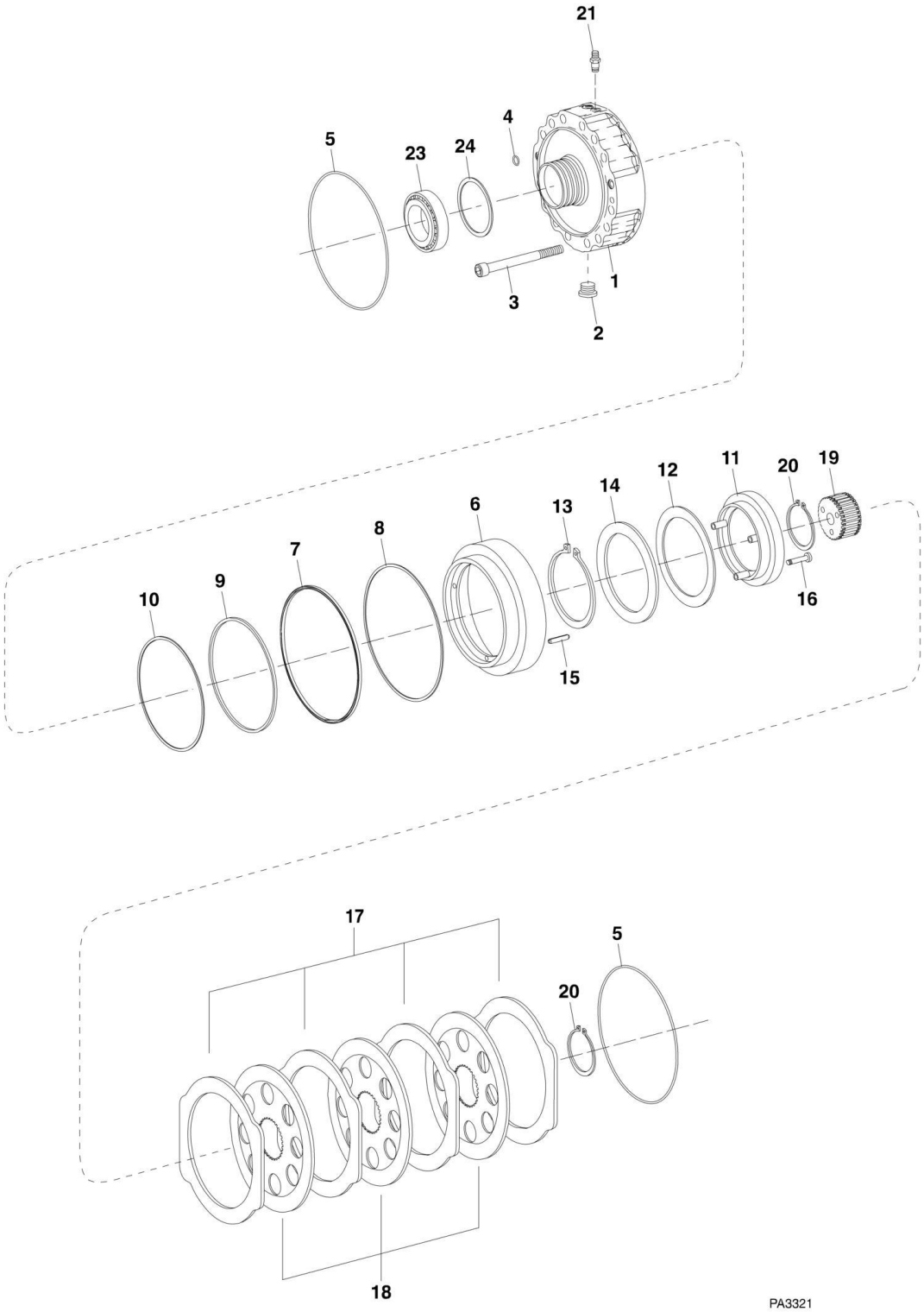

FIGURE 5-30. REAR AXLE - M-DISC BRAKE (644E SN 0160039830 to Present, Including 0160036724, 0160036811, 0160036907 and 0160037012; 944E SN 0160040124 to Present, Including 0160034634, 0160036710, 0160036722, 0160036735 and 0160036738)

ITEM	PART NUMBER	QTY	DESCRIPTION	REV
1	70022282	2	BRAKE HOUSING **(Prior to SN 0160041827)**	
1	70022788	2	BRAKE HOUSING **(SN 0160041827 to Present)**	
2	1319578	2	SCREW PLUG **(Prior to SN 0160041827)**	
2	70023404	2	SCREW PLUG **(SN 0160041827 to Present)**	
3	70022209	6	CAP SCREW, M12X105	
4	8036847	10	O-RING	
5	80304462	4	O-RING	
6	70022250	2	PISTON	
7	70022190	2	PISTON PACKING	
8	70022193	2	BACKUP RING	
9	70022189	2	PISTON PACKING	
10	70022194	2	BACKUP RING	
11	70022236	2	RING **(Prior to SN 0160041827)**	
11	70023908	2	RING **(SN 0160041827 to Present)**	
12	70022183	2	CUP SPRING	
13	70022198	2	RETAINING RING	
14	70022235	2	WASHER	
15	70022186	8	SLOT PIN	
16	1319214	6	CAP SCREW, M8X40	
17	70022196	8	O.CLUTCH DISC	
18	70022176	6	I.CLUTCH DISC	
19	70022253	2	DISC CARRIER	
20	10731949	4	RETAINING RING	
21	70022171	2	BREATHER	
22	70022215	2	SCREW PLUG, (not shown) **(Prior to SN 0160041827)**	
23	8036447	2	BEARING	
24	1319537	AR	SHIM, A=0.95	
24	1319545	AR	SHIM, A=1.05	
24	1319539	AR	SHIM, A=1.15	
24	1319540	AR	SHIM, A=1.25	
24	1319542	AR	SHIM, A=1.35	

FIGURE 5-31. REAR AXLE - BRAKE (644E Prior to SN 0160039830, Excluding 0160036724, 0160036811, 0160036907 and 0160037012; 944E Prior to SN 0160040124, Excluding 0160034634, 0160036710, 0160036722, 0160036735 and 0160036738)

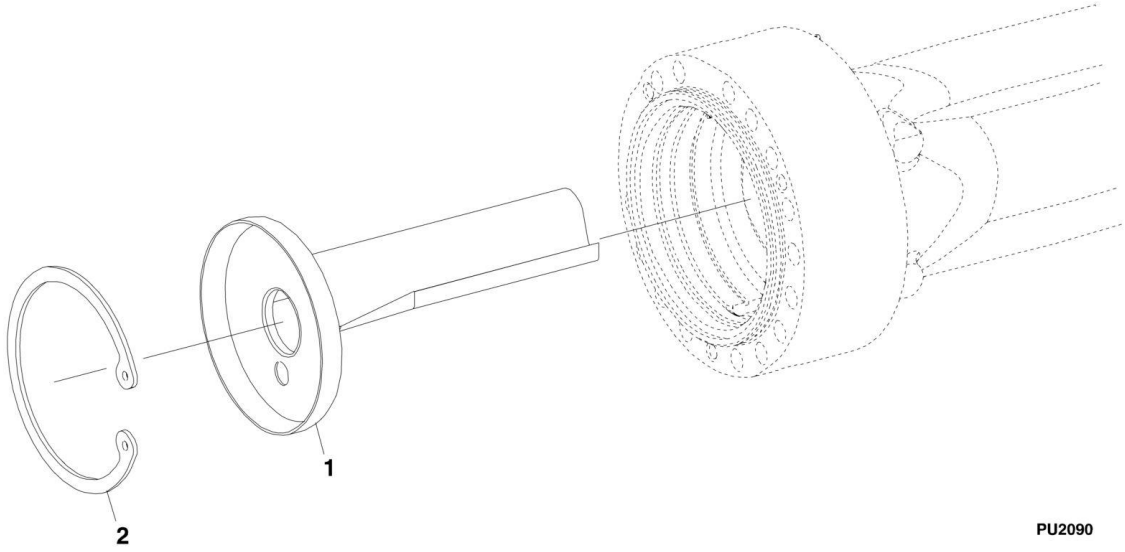

FIGURE 5-31. REAR AXLE - BRAKE (644E Prior to SN 0160039830, Excluding 0160036724, 0160036811, 0160036907 and 0160037012; 944E Prior to SN 0160040124, Excluding 0160034634, 0160036710, 0160036722, 0160036735 and 0160036738)

ITEM	PART NUMBER	QTY	DESCRIPTION	REV
1	1321172	2	OIL DAM	
2	1321178	2	RETAINING RING	

FIGURE 5-32. REAR AXLE - JOINT HOUSING (644E Prior to SN 0160039830, Excluding 0160036724, 0160036811, 0160036907 and 0160037012; 944E Prior to SN 0160040124, Excluding 0160034634, 0160036710, 0160036722, 0160036735 and 0160036738)

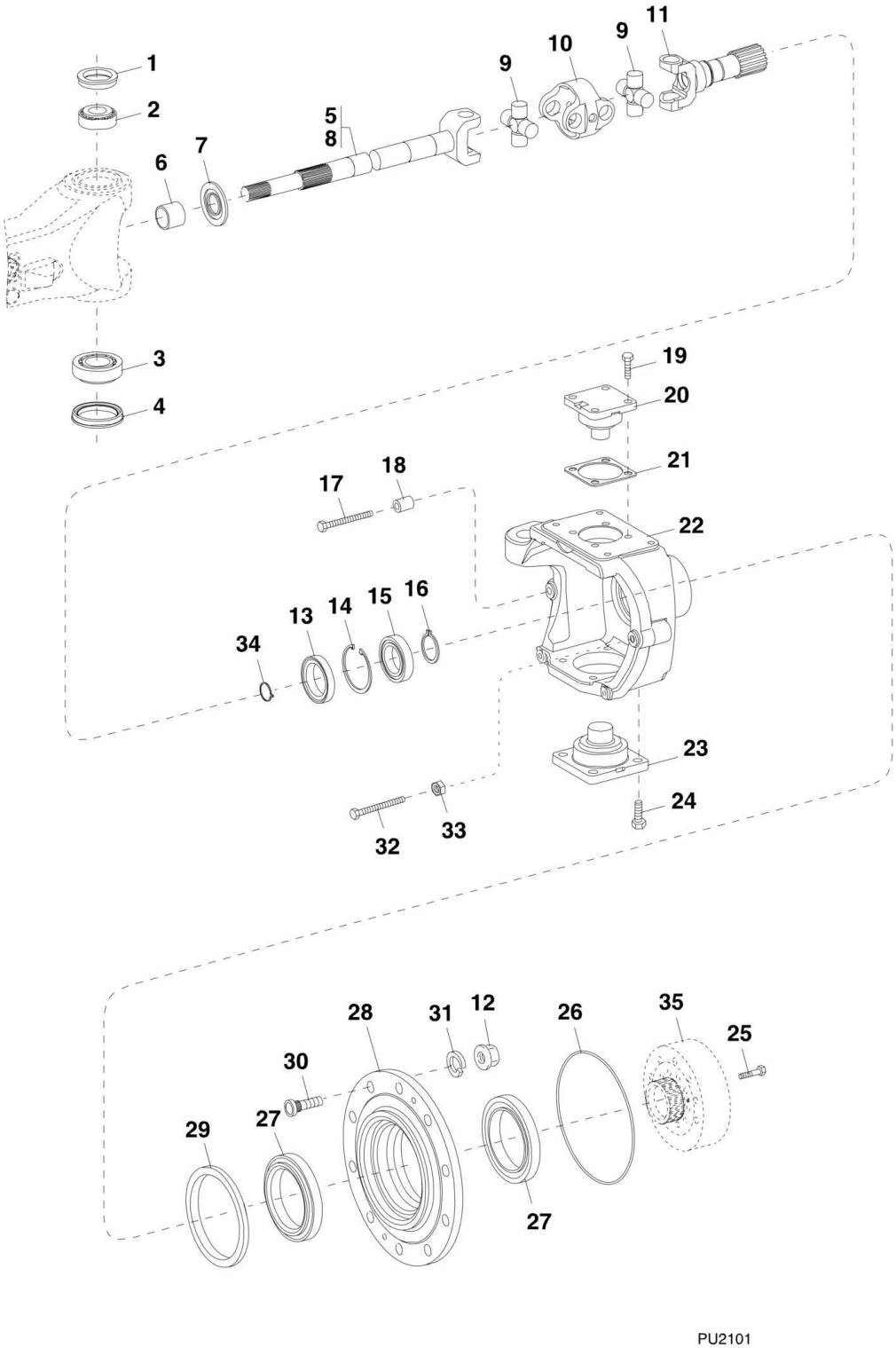

PU2101

FIGURE 5-32. REAR AXLE - JOINT HOUSING (644E Prior to SN 0160039830, Excluding 0160036724, 0160036811, 0160036907 and 0160037012; 944E Prior to SN 0160040124, Excluding 0160034634, 0160036710, 0160036722, 0160036735 and 0160036738)

ITEM	PART NUMBER	QTY	DESCRIPTION	REV
1	8036338	2	MULTI SEAL RING	
2	1319444	2	ROLLER BEARING	
3	1319445	2	ROLLER BEARING	
4	1319447	2	SHAFT SEAL	
5	7027218	2	DRIVE SHAFT UNIVERSAL COUPLING, (not maintenance free), (includes items 6 thru 11), (Axle) **(Prior to SN 720124)**	
5	70022052	2	DRIVE SHAFT UNIVERSAL COUPLING, (maintenance free), (7028979 is no longer available, use 70022052 for replacement or items 6 thru 11 for service), (Axle) **(SN 720125 to Present)**	
6	8035973	2	BUSHING	
7	8035996	2	SCREEN SHEET	
8	7027221	2	JOINT COUPLING FORK, (Axle) **(Prior to SN 720124)**	
8	8035995	2	JOINT COUPLING FORK, (Axle) **(SN 720125 to Present)**	
9	7027222	2	JOINT CROSS, (Axle) **(Prior to SN 720124)**	
9	70021554	2	JOINT CROSS, (Axle) **(SN 720125 to Present)**	
10	7027219	2	CENTRAL PIECE, (Axle) **(Prior to SN 720124)**	
10	70021553	2	CENTRAL PIECE, (Axle) **(SN 720125 to Present)**	
11	7027220	2	JOINT FORK, (Axle) **(Prior to SN 720124)**	
11	8035994	2	JOINT FORK, (Axle) **(SN 720125 to Present)**	
12		Ref	WHEEL NUT, (See DRIVE TRAIN COMPONENTS for Breakdown)	
13	7028977	2	SHAFT SEAL	
14	1319210	2	RETAINING RING	
15	1321157	2	BALL BEARING	
16	80304405	2	RETAINING RING	
17	8036330	2	STOP SCREW	
18	8036413	2	SPACER TUBE	
19	1319463	8	HEX SCREW	
20	1319461	2	BEARING PIN	
21	1319448	AR	SHIM, 0.2mm	
21	1319449	AR	SHIM, 0.3mm	
21	1319450	AR	SHIM, 0.4mm	
21	1319451	AR	SHIM, 0.6mm	
21	1319452	AR	SHIM, 0.8mm	
21	1319453	AR	SHIM, 1.0mm	
21	1319454	AR	SHIM, 1.2mm	
21	1319455	AR	SHIM, 1.4mm	
21	1319456	AR	SHIM, 1.6mm	
21	1319457	AR	SHIM, 1.8mm	
21	1319458	AR	SHIM, 2.0mm	
21	1319459	AR	SHIM, 0.7mm	
21	1319460	AR	SHIM, 0.5mm	
22	1321245	1	JOINT HOUSING, (left side)	
22	1321246	1	JOINT HOUSING, (right side)	
23	1319462	2	BEARING PIN	
24	1319464	8	HEX SCREW	
25	8035997	20	HEX SCREW	
26	1319470	2	O-RING, (644E)	
26	1321155	2	O-RING, (944E)	

ITEM	PART NUMBER	QTY	DESCRIPTION	REV
27	1319472	4	ROLLER BEARING	
28	8036435	2	HUB, (644E)	
28	1321239	2	HUB, (944E)	
29	80304173	2	CASSETTE RING	
30	8036434	20	WHEEL BOLT	
31		Ref	SPRING WASHER, (See DRIVE TRAIN COMPONENTS for Breakdown)	
32	8036610	2	STOP SCREW	
33	1319477	2	HEX NUT	
34	1321226	2	RETAINING RING	
35		Ref	RING GEAR, (See REAR AXLE - PLANETARY DRIVE for Breakdown)	

FIGURE 5-33. REAR AXLE - JOINT HOUSING (644E SN 0160039830 to Present, Including 0160036724, 0160036811, 0160036907 and 0160037012; 944E SN 0160040124 to Present, Including 0160034634, 0160036710, 0160036722, 0160036735 and 0160036738)

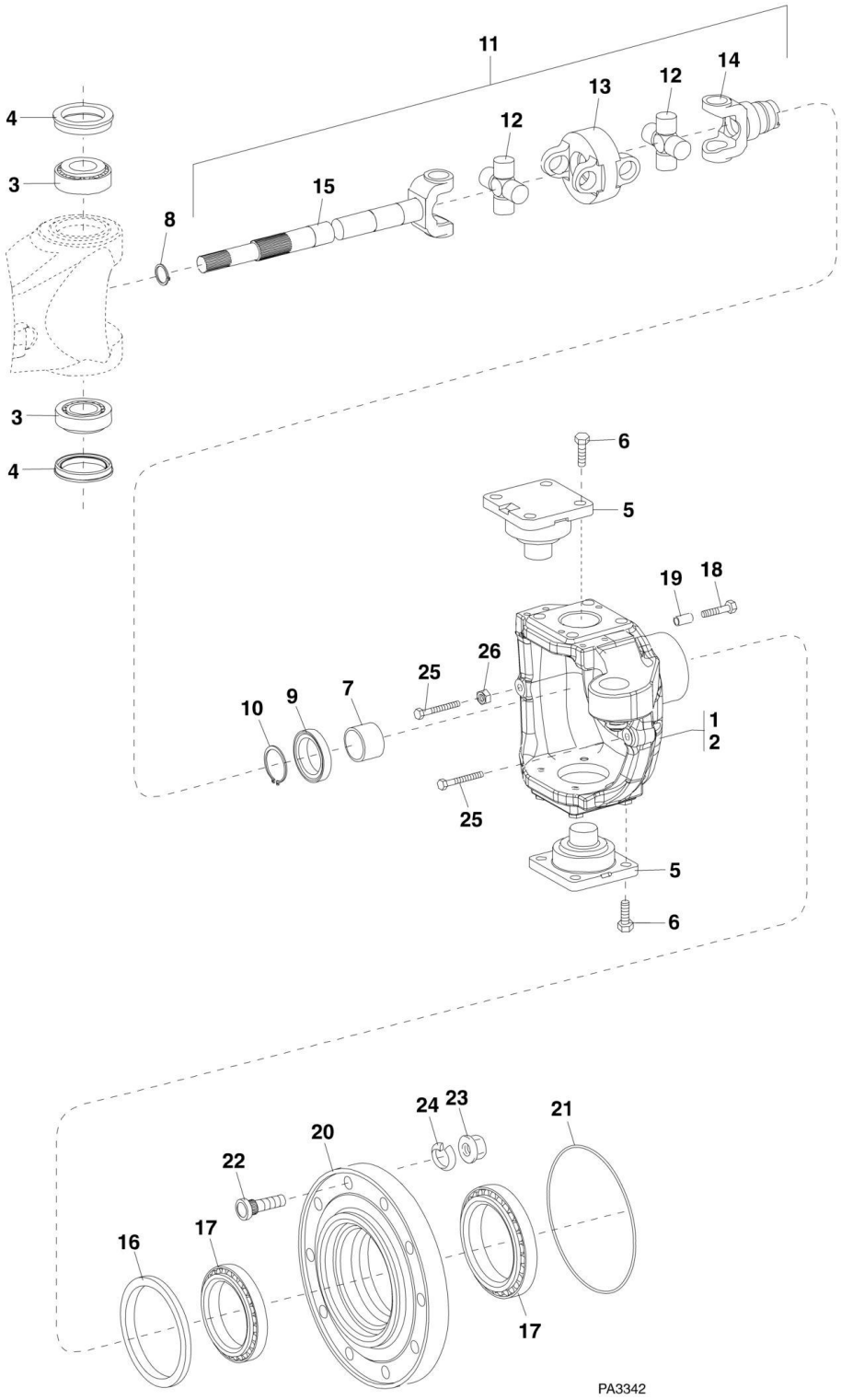

FIGURE 5-33. REAR AXLE - JOINT HOUSING (644E SN 0160039830 to Present, Including 0160036724, 0160036811, 0160036907 and 0160037012; 944E SN 0160040124 to Present, Including 0160034634, 0160036710, 0160036722, 0160036735 and 0160036738)

ITEM	PART NUMBER	QTY	DESCRIPTION	REV
1	70022237	1	JOINT HOUSING, (right side)	
2	70022238	1	JOINT HOUSING, (left side)	
3	70022223	4	ROLLER BEARING	
4	1319447	4	SHAFT SEAL	
5	70022240	4	BEARING PIN	
6	1319464	16	HEX SCREW, M16X40	
7	70022179	2	BUSHING	
8	10731789	2	RETAINING RING	
9	70022218	2	SHAFT SEAL	
10	1321226	2	RETAINING RING	
11	70022170	2	UNIVERSAL COUPLING DRIVE SHAFT ASSY, (includes items 12 thru 15) **(Prior to SN 0160041827)**	
11	70022781	2	UNIVERSAL COUPLING DRIVE SHAFT ASSY, (includes items 12 thru 15) **(SN 0160041827 to Present)**	
12	70021554	2	JOINT CROSS	
13	70021553	1	CENTRAL PIECE **(Prior to SN 0160041827)**	
13	70022782	1	CENTRAL PIECE **(SN 0160041827 to Present)**	
14	70022187	1	FORK SHAFT	
15	70022188	1	FORK SHAFT	
16	80304173	2	SHAFT SEAL	
17	1319472	4	ROLLER BEARING	
18	70022208	16	HEX HD CAPSCREW, M14X70 **(Prior to SN 0160041827)**	
18	70023405	16	HEX HD CAPSCREW **(SN 0160041827 to Present)**	
19	70022234	16	CENTERING BUSHING	
20	70022249	2	HUB	
21	70022203	2	O-RING	
22	70022230	20	WHEEL BOLT **(Prior to SN 0160041827)**	
22	70023909	20	WHEEL BOLT **(SN 0160041827 to Present)**	
23		Ref	WHEEL NUT, (See DRIVE TRAIN COMPONENTS for Breakdown)	
24		Ref	SPRING WASHER, (See DRIVE TRAIN COMPONENTS for Breakdown)	
25	8036330	4	STOP SCREW, M14X1.5	
26	1319477	2	HEX NUT, M14X1.5	

FIGURE 5-34. REAR AXLE - PLANETARY DRIVE (644E Prior to SN 0160039830, Excluding 0160036724, 0160036811, 0160036907 and 0160037012; 944E Prior to SN 0160040124, Excluding 0160034634, 0160036710, 0160036722, 0160036735 and 0160036738)

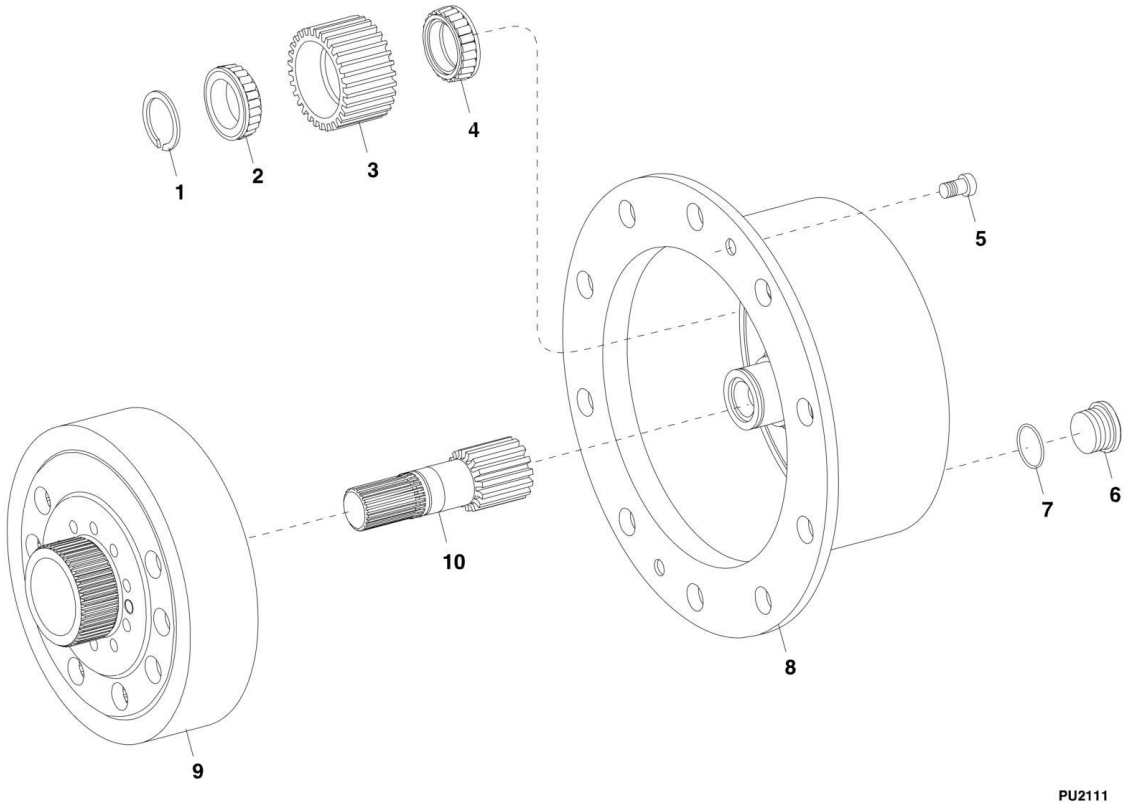

FIGURE 5-34. REAR AXLE - PLANETARY DRIVE (644E Prior to SN 0160039830, Excluding 0160036724, 0160036811, 0160036907 and 0160037012; 944E Prior to SN 0160040124, Excluding 0160034634, 0160036710, 0160036722, 0160036735 and 0160036738)

ITEM	PART NUMBER	QTY	DESCRIPTION	REV
1	1319485	6	SNAP RING	
2	1319484	6	INNER RING BEARING	
3	1321231	6	PLANET GEAR	
4	1319483	6	INNER RING BEARING	
5	1319488	4	CAPSCREW, (644E)	
5	8035977	4	CAPSCREW, (944E)	
6	1319506	2	SCREW PLUG	
7	8036331	2	O-RING	
8	8036436	2	PLANET CARRIER, (644E)	
8	1321238	2	PLANET CARRIER, (944E)	
9	1321247	2	RING GEAR	
10	1321242	1	SUN GEAR SHAFT	

FIGURE 5-35. REAR AXLE - PLANETARY DRIVE (644E SN 0160039830 to Present, Including 0160036724, 0160036811, 0160036907 and 0160037012; 944E SN 0160040124 to Present, Including 0160034634, 0160036710, 0160036722, 0160036735 and 0160036738)

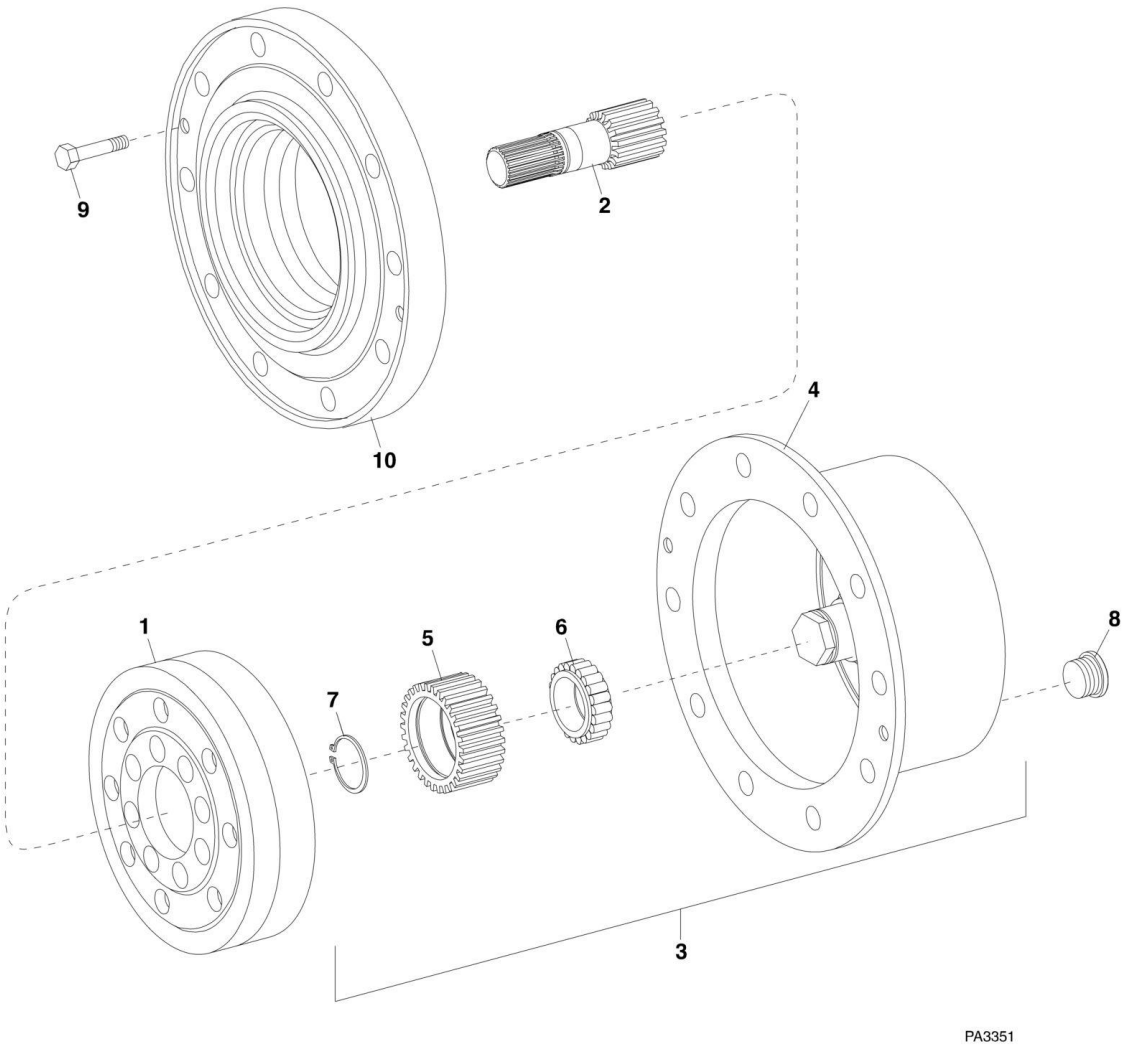

FIGURE 5-35. REAR AXLE - PLANETARY DRIVE (644E SN 0160039830 to Present, Including 0160036724, 0160036811, 0160036907 and 0160037012; 944E SN 0160040124 to Present, Including 0160034634, 0160036710, 0160036722, 0160036735 and 0160036738)

ITEM	PART NUMBER	QTY	DESCRIPTION	REV
1	70022242	1	RING GEAR	
2	70022239	2	SUN GEAR SHAFT **(Prior to SN 0160041827)**	
2	70022784	2	SUN GEAR SHAFT **(SN 0160041827 to Present)**	
3	70022233	2	PLANETARY CARRIER ASSY, (includes items 4 thru 7) **(Prior to SN 0160041827)**	
3	70022281	2	PLANETARY CARRIER ASSY, (includes items 4 thru 7) **(SN 0160041827 to Present)**	
4	70022256	1	PLANETARY CARRIER **(Prior to SN 0160041827)**	
4	70022283	1	PLANETARY CARRIER **(SN 0160041827 to Present)**	
5	70022243	3	PLANETARY GEAR **(Prior to SN 0160041827)**	
5	70022243	4	PLANETARY GEAR **(SN 0160041827 to Present)**	
6	70022221	3	CYL ROLLER BEARING **(Prior to SN 0160041827)**	
7	70022197	3	RETAINING RING	
8	1319578	2	SCREW PLUG **(Prior to SN 0160041827)**	
8	70023404	2	SCREW PLUG **(SN 0160041827 to Present)**	
9	70022207	4	HEX SCREW, M12X30	
10		Ref	HUB, (See REAR AXLE - JOINT HOUSING for Breakdown)	

FIGURE 5-36. ZF TRANSMISSION

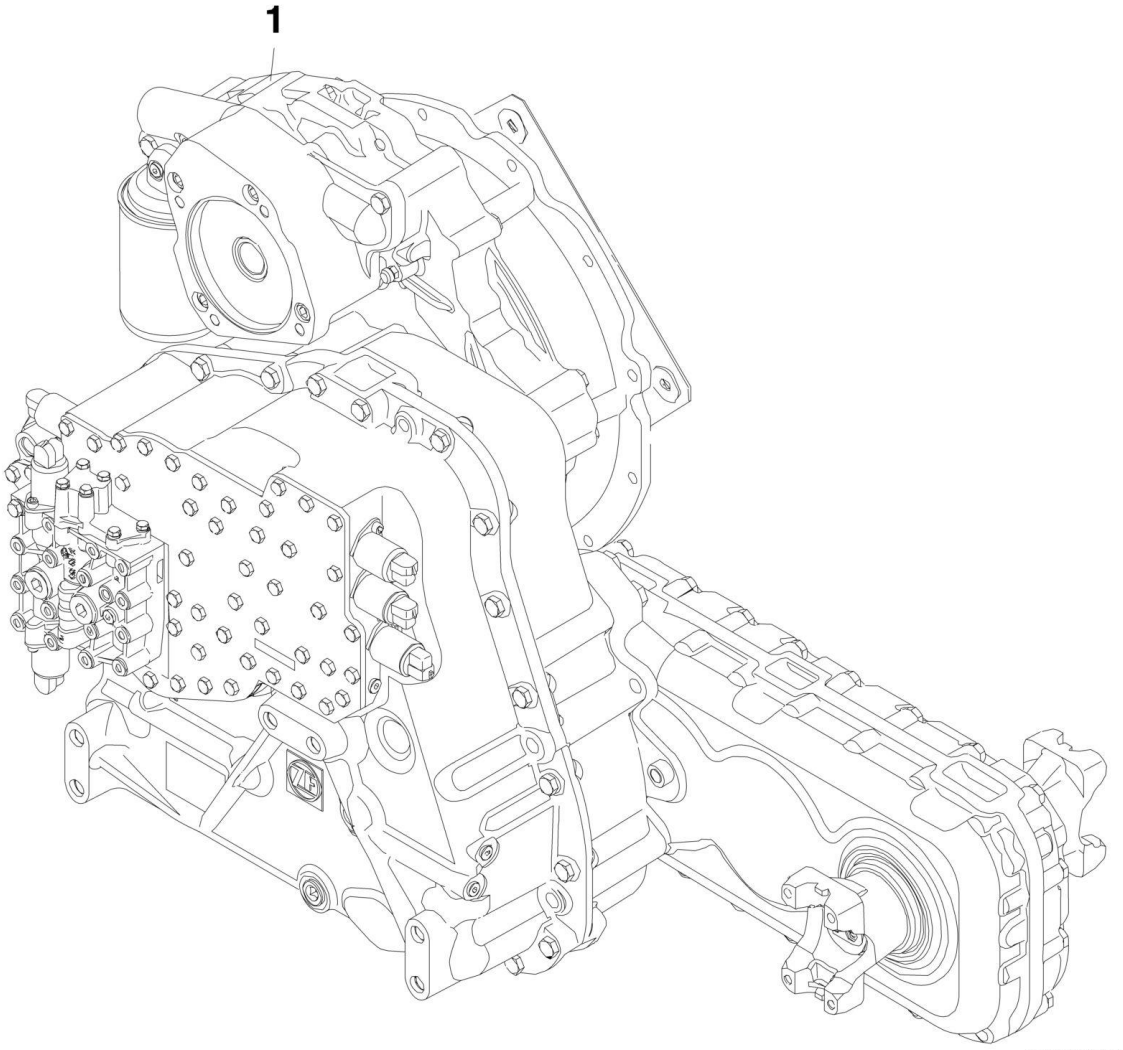

FIGURE 5-36. ZF TRANSMISSION

ITEM	PART NUMBER	QTY	DESCRIPTION	REV
	1001095739	1	TRANSMISSION KIT, (644E - p/n 8841046 & 944E - p/n 8841047 no longer available, order 1001095739 for replacement), (includes item 1 and items 17 & 22 on DRIVE TRAIN COMPONENTS	C
1	1001095741	NLA	TRANSMISSION ASSY - 4 SPEED, (no longer available, use 1001125968 for replacement or the following items for service) **(644E Prior to SN 0160048717; 944E Prior to SN 0160041827)**	C
1	1001125968	1	TRANSMISSION ASSY - 4 SPEED, (includes the following items) **(644E SN 0160048717 to Present, Including 0160045421; 944E SN 0160041827 to Present)**	A
1		Ref	ENGINE CONNECTION AND INPUT SHAFTS, (See ZF TRANSMISSION - ENGINE CONNECTION AND INPUT SHAFTS for Breakdown)	
1		Ref	GEARBOX HOUSING AND COUPLING LOCATION, (See ZF TRANSMISSION - GEARBOX HOUSING AND COUPLING LOCATION for Breakdown)	
1		Ref	COUPLING GROUP 1, (See ZF TRANSMISSION - COUPLING GROUP 1 for Breakdown)	
1		Ref	COUPLING GROUP 2, (See ZF TRANSMISSION - COUPLING GROUP 2 for Breakdown)	
1		Ref	COUPLING GROUP 3, (See ZF TRANSMISSION - COUPLING GROUP 3 for Breakdown)	
1		Ref	COUPLING GROUP 4, (See ZF TRANSMISSION - COUPLING GROUP 4 for Breakdown)	
1		Ref	REVERSING GEAR GROUP CV, (See ZF TRANSMISSION - REVERSING GEAR GROUP CV for Breakdown)	
1		Ref	REVERSING GEAR GROUP CR, (See ZF TRANSMISSION - REVERSING GEAR GROUP CR for Breakdown)	
1		Ref	OIL PUMP, (See ZF TRANSMISSION - OIL PUMP for Breakdown)	
1		Ref	CONTROL UNIT, (See ZF TRANSMISSION - CONTROL UNIT for Breakdown)	
1		Ref	GEARSHIFT SYSTEM, (See ZF TRANSMISSION - GEARSHIFT SYSTEM for Breakdown)	
1		Ref	TRANSFER BOX, (See ZF TRANSMISSION - TRANSFER BOX for Breakdown)	

FIGURE 5-37. ZF TRANSMISSION - ENGINE CONNECTION AND INPUT SHAFTS

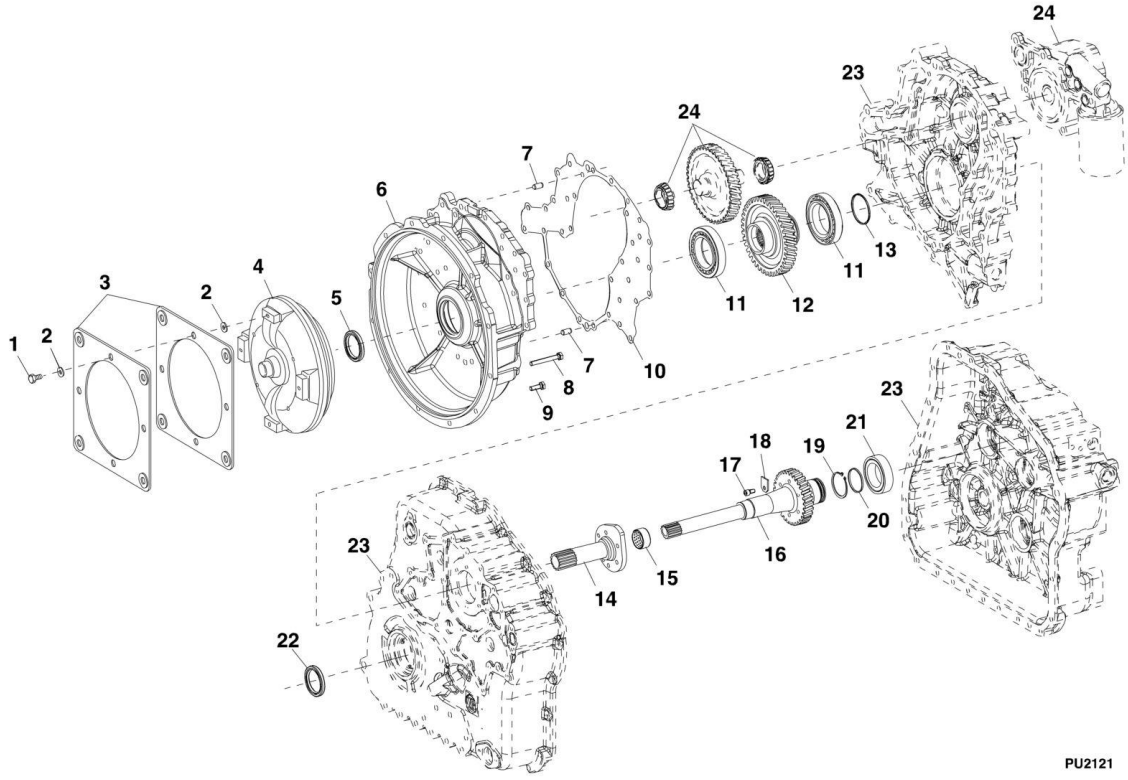

FIGURE 5-37. ZF TRANSMISSION - ENGINE CONNECTION AND INPUT SHAFTS

ITEM	PART NUMBER	QTY	DESCRIPTION	REV
1	7026744	4	HEX HD CAPSCREW, M10X16	
2	7026745	8	THRUST WASHER, 1	
3	1319229	2	DIAPHRAGM	
4	7027256	1	CONVERTER	
5	1319576	1	SHAFT SEAL	
6	70021526	1	CONVERTER BELL	
7	1319571	2	CYLINDRICAL PIN	
8	7026775	15	HEX HD CAPSCREW, M10X80	
9	80304394	21	HEX HD CAPSCREW, M10X30	
10	7026774	1	GASKET	
11	7026769	2	ROLLER BEARING	
12	7026771	1	SHAFT	
13	7026772	1	PISTON RING, 67X3.00	
14	7026748	1	STATOR SHAFT	
15	1319558	1	BEARING BUSHING	
16	7026747	1	TURBINE SHAFT	
17	1319585	2	CAPSCREW, M8X16	
18	N.S.S.	2	SHACKLE	
19	80304405	1	RETAINING RING, 55X2.00	
20	7026749	1	PISTON RING	
21	1319563	1	BEARING BUSHING	
22	1319641	1	SHAFT SEAL	
23		Ref	GEARBOX HOUSING, (See ZF TRANSMISSION - GEARBOX HOUSING AND COUPLING LOCATION for Breakdown)	
24		Ref	OIL PUMP, (See ZF TRANSMISSION - OIL PUMP for Breakdown)	

FIGURE 5-38. ZF TRANSMISSION - GEARBOX HOUSING AND COUPLING LOCATION

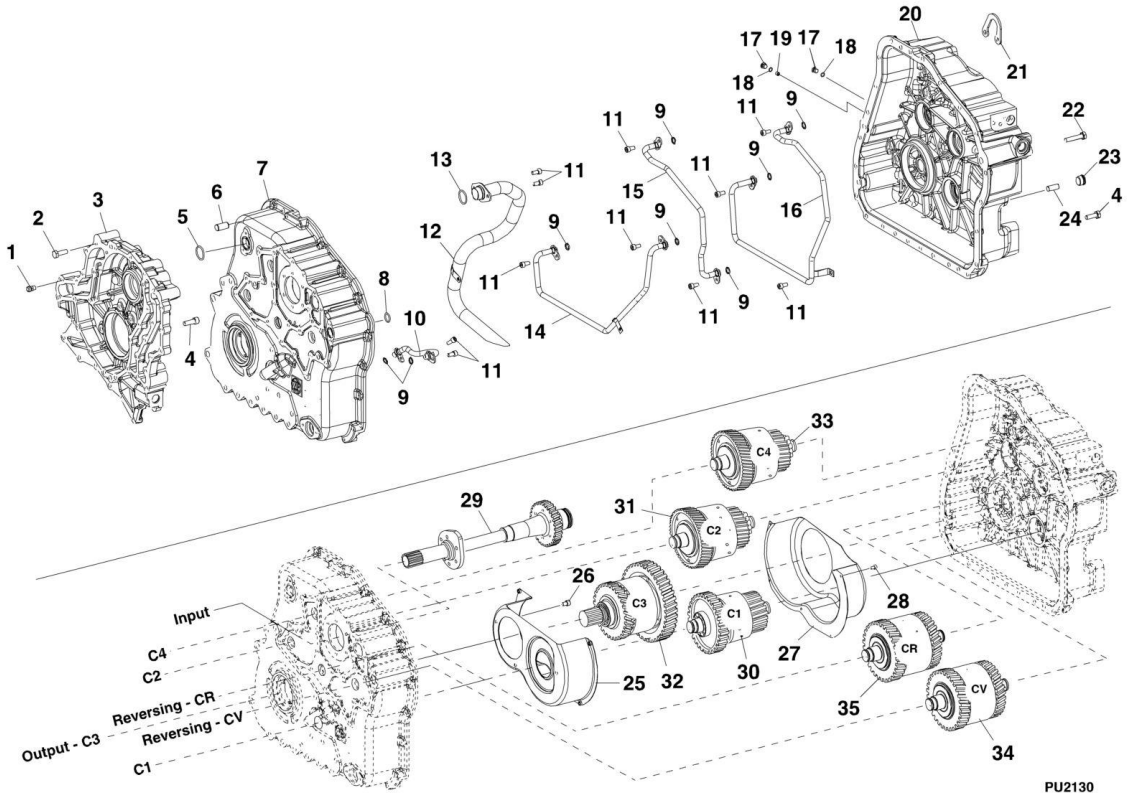

FIGURE 5-38. ZF TRANSMISSION - GEARBOX HOUSING AND COUPLING LOCATION

ITEM	PART NUMBER	QTY	DESCRIPTION	REV
1	10731744	1	BREATHER	
2	N.S.S.	6	HEX HD CAPSCREW, M10X30	
3	70021920	1	HOUSING	
4	80304394	31	HEX HD CAPSCREW, M10X30	
5	70023885	1	O-RING	
6	1319571	2	CYLINDRICAL PIN	
7	7029972	1	HOUSING I	
8	1319581	1	O-RING	
9	8036847	8	O-RING	
10	7026754	1	PIPE	
11	1319585	11	HEX HD CAPSCREW, M8X16	
12	7026753	1	SUCTION TUBE	
13	70023885	1	O-RING	
14	7026751	1	PIPE	
15	7026750	1	PIPE	
16	7026752	1	PIPE	
17	1319670	7	SCREW PLUG	
18	10731709	7	O-RING	
19	N.S.S.	1	ORIFICE	
20	7029973	1	HOUSING II	
21	1319590	1	BRACKET	
22	7026794	6	HEX HD CAPSCREW, M10X50	
23	1319578	1	SCREW PLUG	
24	1319571	2	CYLINDRICAL PIN	
25	7026755	1	SCREEN SHEET	
26	N.S.S.	5	SOCKET HD CAPSCREW, M8X12	
27	7026756	1	SCREEN SHEET	
28	1319646	5	CAPSCREW	
29		Ref	TURBINE SHAFT, (See ZF TRANSMISSION - ENGINE CONNECTION AND INPUT SHAFTS for Breakdown)	
30		Ref	COUPLING GROUP 1, (See ZF TRANSMISSION - COUPLING GROUP 1 for Breakdown)	
31		Ref	COUPLING GROUP 2, (See ZF TRANSMISSION - COUPLING GROUP 2 for Breakdown)	
32		Ref	COUPLING GROUP 3, (See ZF TRANSMISSION - COUPLING GROUP 3 for Breakdown)	
33		Ref	COUPLING GROUP 4, (See ZF TRANSMISSION - COUPLING GROUP 4 for Breakdown)	
34		Ref	REVERSING GEAR GROUP CV, (See ZF TRANSMISSION - REVERSING GEAR GROUP CV for Breakdown)	
35		Ref	REVERSING GEAR GROUP CR, (See ZF TRANSMISSION - REVERSING GEAR GROUP CR for Breakdown)	

FIGURE 5-39. ZF TRANSMISSION - COUPLING GROUP 1 644E

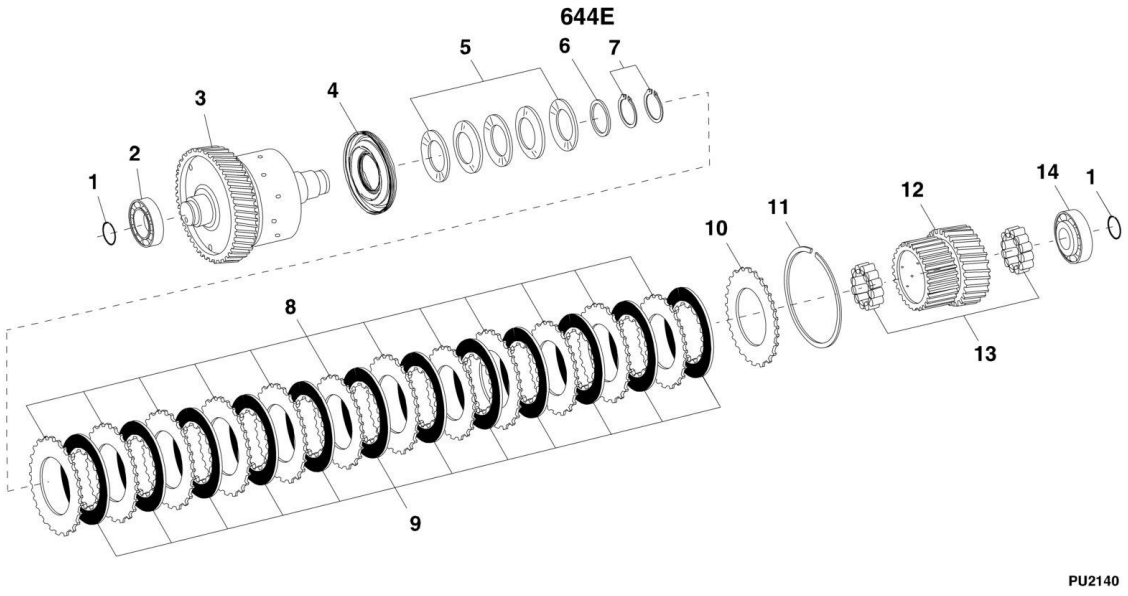

FIGURE 5-39. ZF TRANSMISSION - COUPLING GROUP 1 644E

ITEM	PART NUMBER	QTY	DESCRIPTION	REV
1	7026761	2	PISTON RING	
2	1319608	1	ROLLER BEARING	
3	7027261	1	COUPLING, (used with transmission - 4WG92 TSC)	
3	1319591	1	COUPLING, (used with transmission - 4WG98 TSC)	
4	8036575	1	PISTON	
5	1319595	5	CUP SPRING	
6	1319596	1	SHIM	
7	10731845	2	RETAINING RING	
8	7026759	AR	O. CLUTCH DISC, (transmission - 4WG92 TSC qty 10, 4WG98 TSC qty 12)	
9	7026758	AR	LIN. CLUTCH DISC, (transmission - 4WG92 TSC qty 10, 4WG98 TSC qty 12)	
10	7026760	1	END SHIM	
11	1319600	1	SNAP RING, 3.5mm	
11	1319601	1	SNAP RING, 3.5mm	
11	1319602	1	SNAP RING, 3.0mm	
11	1319603	1	SNAP RING, 2.5mm	
11	1319604	1	SNAP RING, 2.0mm	
11	7029849	1	SNAP RING, 3.25mm	
11	7029850	1	SNAP RING, 3.75mm	
11	7029851	1	SNAP RING, 2.25mm	
11	7029852	1	SNAP RING, 2.75mm	
12	1319607	1	DISC CARRIER	
13	1319606	2	ROLLER CAGE	
14	7029532	1	OUTER RING	
14	7029533	1	INNER RING	

FIGURE 5-40. ZF TRANSMISSION - COUPLING GROUP 1 944E

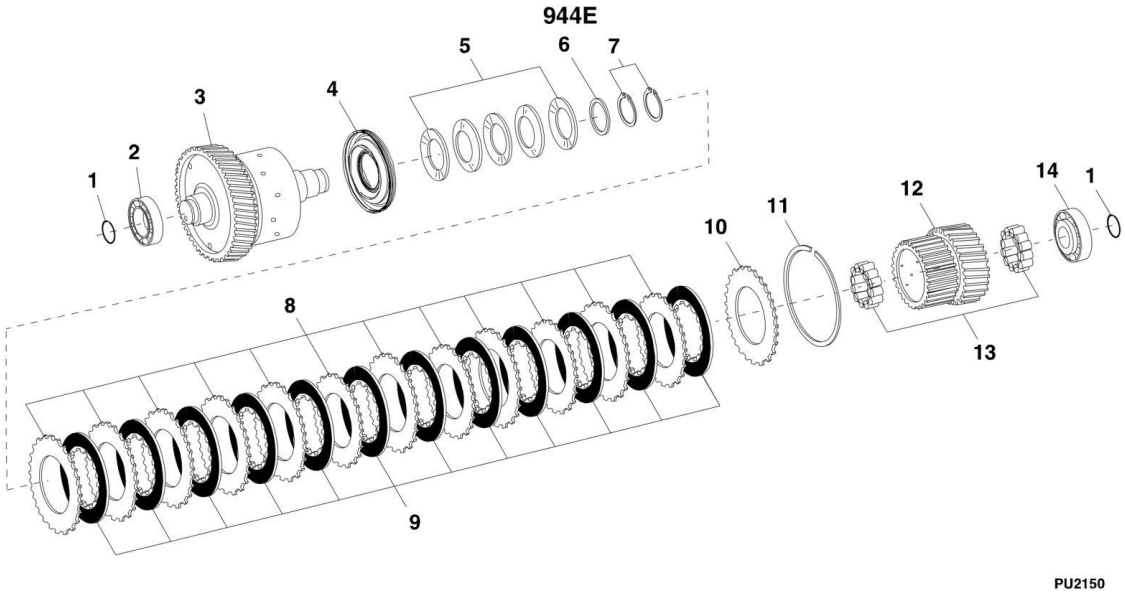

FIGURE 5-40. ZF TRANSMISSION - COUPLING GROUP 1 944E

ITEM	PART NUMBER	QTY	DESCRIPTION	REV
1	7026761	2	PISTON RING	
2	1319608	1	ROLLER BEARING	
3	1319591	1	COUPLING	
4	8036575	1	PISTON	
5	1319595	5	CUP SPRING	
6	1319596	1	SHIM	
7	10731845	2	RETAINING RING	
8	7026759	12	O. CLUTCH DISC	
9	7026758	12	LIN. CLUTCH DISC	
10	7026760	1	END SHIM	
11	1319600	1	SNAP RING, 3.5mm	
11	1319601	1	SNAP RING, 3.5mm	
11	1319602	1	SNAP RING, 3.0mm	
11	1319603	1	SNAP RING, 2.5mm	
11	1319604	1	SNAP RING, 2.0mm	
11	7029849	1	SNAP RING, 3.25mm	
11	7029850	1	SNAP RING, 3.75mm	
11	7029851	1	SNAP RING, 2.25mm	
11	7029852	1	SNAP RING, 2.75mm	
12	1319607	1	DISC CARRIER	
13	1319606	2	ROLLER CAGE	
14	7029532	1	OUTER RING	
14	7029533	1	INNER RING	

FIGURE 5-41. ZF TRANSMISSION - COUPLING GROUP 2 644E

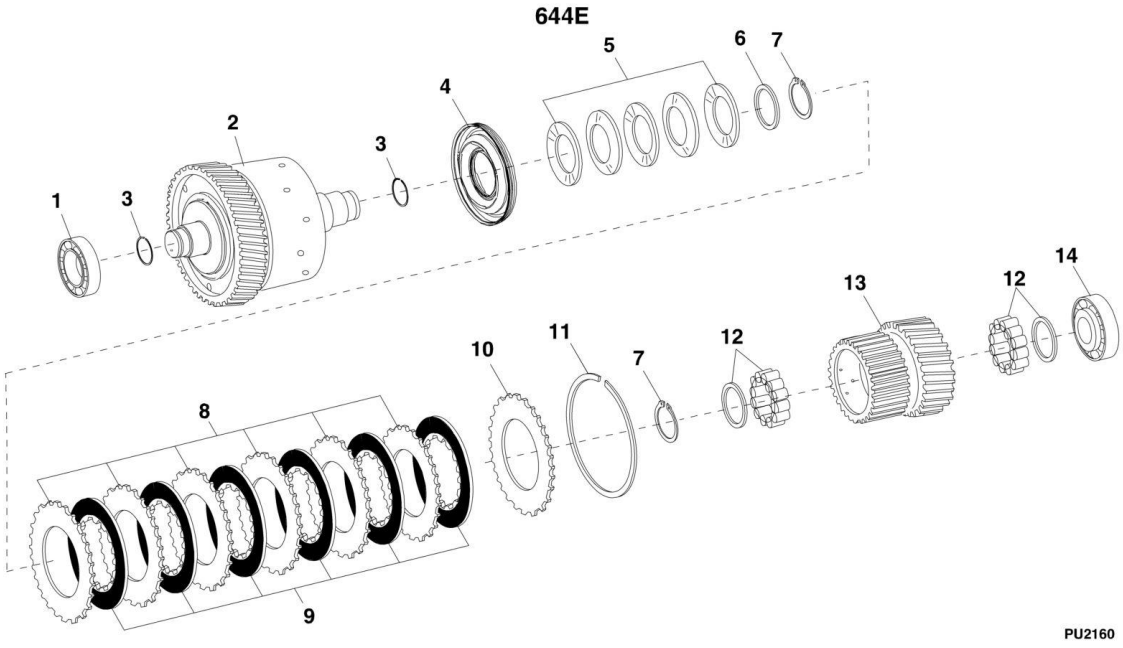

FIGURE 5-41. ZF TRANSMISSION - COUPLING GROUP 2 644E

ITEM	PART NUMBER	QTY	DESCRIPTION	REV
1	1319615	1	ROLLER BEARING	
2	7027264	1	COUPLING, (used with transmission - 4WG92 TSC)	
2	7026763	1	COUPLING, (used with transmission - 4WG98 TSC)	
3	7026761	2	PISTON RING	
4	8036575	1	PISTON	
5	1319595	5	CUP SPRING	
6	1319596	1	SHIM	
7	10731845	2	RETAINING RING	
8	7026759	AR	O. CLUTCH DISC, (transmission - 4WG92 TSC qty 6, 4WG98 TSC qty 8)	
9	7026758	AR	LIN. CLUTCH DISC, (transmission - 4WG92 TSC qty 6, 4WG98 TSC qty 8)	
10	7026760	1	END SHIM	
11	1319600	1	SNAP RING, 3.5mm	
11	1319601	1	SNAP RING, 3.5mm	
11	1319602	1	SNAP RING, 3.0mm	
11	1319603	1	SNAP RING, 2.5mm	
11	1319604	1	SNAP RING, 2.0mm	
11	7029849	1	SNAP RING, 3.25mm	
11	7029850	1	SNAP RING, 3.75mm	
11	7029851	1	SNAP RING, 2.25mm	
11	7029852	1	SNAP RING, 2.75mm	
12	1319606	2	ROLLER CAGE	
13	1319614	1	DISC CARRIER	
14	7029532	1	OUTER RING	
14	7029533	1	INNER RING	

FIGURE 5-42. ZF TRANSMISSION - COUPLING GROUP 2 944E

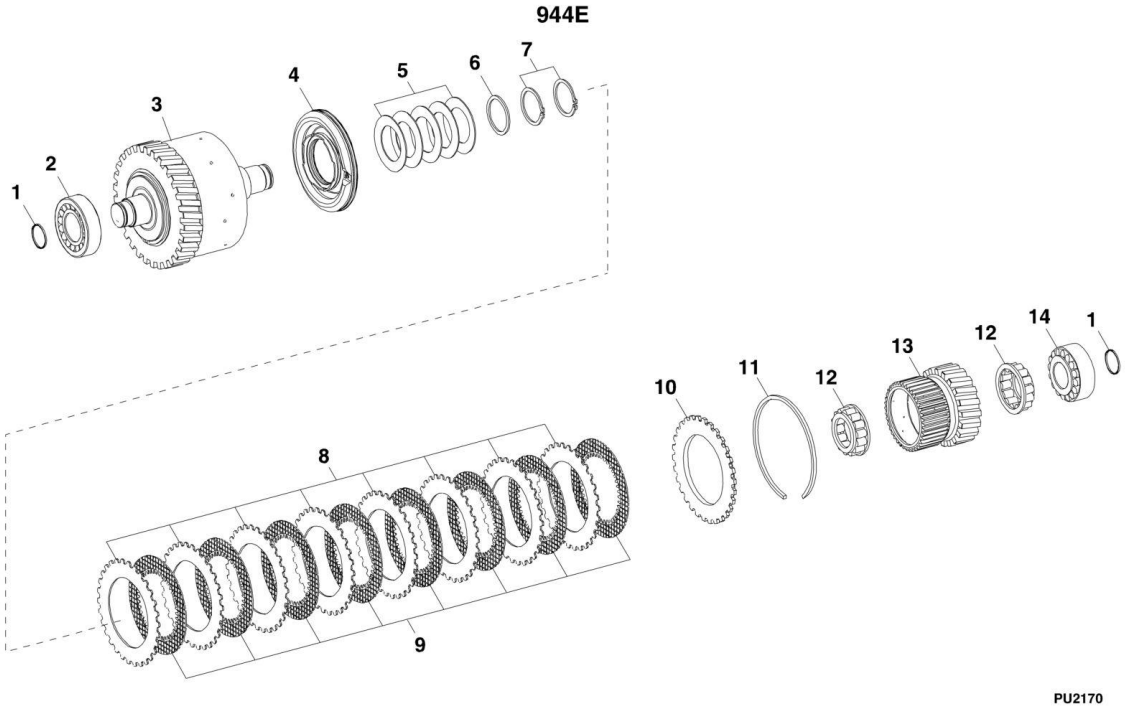

FIGURE 5-42. ZF TRANSMISSION - COUPLING GROUP 2 944E

ITEM	PART NUMBER	QTY	DESCRIPTION	REV
1	7026761	2	PISTON RING	
2	1319615	1	ROLLER BEARING	
3	7026763	1	COUPLING	
4	8036575	1	PISTON	
5	1319595	5	CUP SPRING	
6	1319596	1	SHIM	
7	10731845	2	RETAINING RING	
8	7026759	8	O. CLUTCH DISC	
9	7026758	8	LIN. CLUTCH DISC	
10	7026760	1	END SHIM	
11	1319600	1	SNAP RING, 3.5mm	
11	1319601	1	SNAP RING, 3.5mm	
11	1319602	1	SNAP RING, 3.0mm	
11	1319603	1	SNAP RING, 2.5mm	
11	1319604	1	SNAP RING, 2.0mm	
11	7029849	1	SNAP RING, 3.25mm	
11	7029850	1	SNAP RING, 3.75mm	
11	7029851	1	SNAP RING, 2.25mm	
11	7029852	1	SNAP RING, 2.75mm	
12	1319606	2	ROLLER CAGE	
13	1319614	1	DISC CARRIER	
14	7029532	1	OUTER RING	
14	7029533	1	INNER RING	

FIGURE 5-43. ZF TRANSMISSION - COUPLING GROUP 3 644E

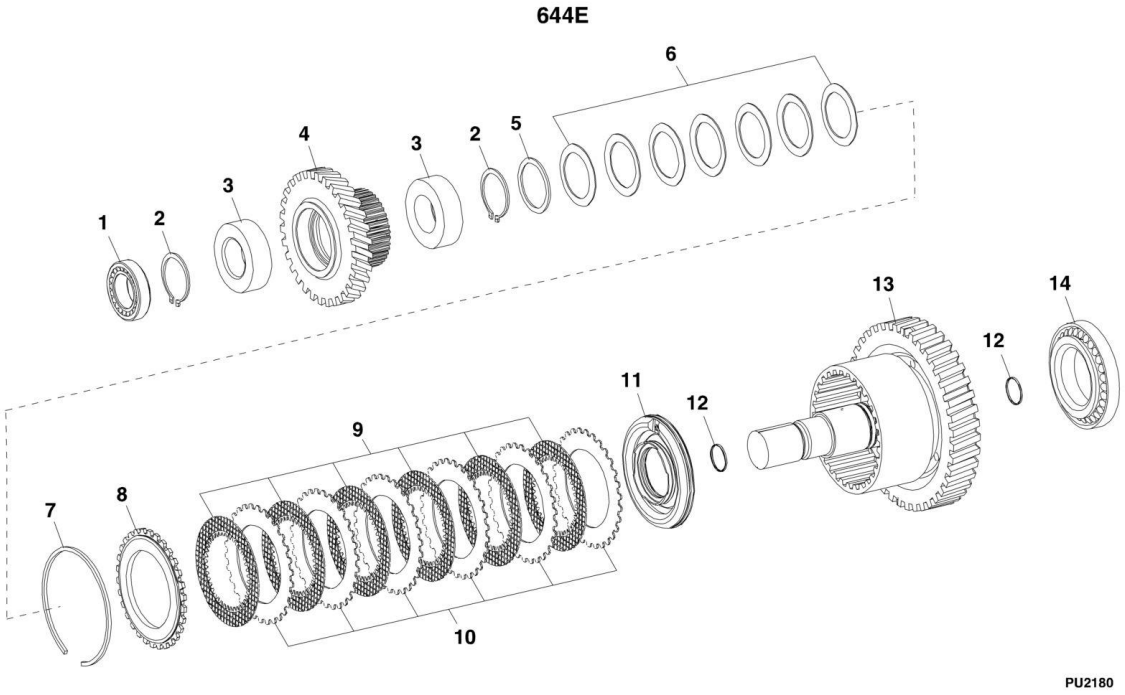

FIGURE 5-43. ZF TRANSMISSION - COUPLING GROUP 3 644E

ITEM	PART NUMBER	QTY	DESCRIPTION	REV
1	N.S.S.	1	ROLLER BEARING ASSY	
1	70021268	1	BEARING OUTER RING	
1	70021269	1	BEARING INNER RING	
2	1321177	2	RETAINING RING, (used with transmission - 4WG92 TSC)	
2	80304227	2	RETAINING RING, (used with transmission - 4WG98 TSC)	
3	N.S.S.	2	ROLLER BEARING ASSY	
3	70021227	1	RING	
3	70021228	1	ROLLER CAGE	
4	7027267	1	DISC CARRIER, (used with transmission - 4WG92 TSC)	
4	1319619	1	DISC CARRIER, (used with transmission - 4WG98 TSC)	
5	7026766	1	WASHER	
6	7026765	7	CUP SPRING	
7	1319600	1	SNAP RING, 3.5mm	
7	1319601	1	SNAP RING, 3.5mm	
7	1319602	1	SNAP RING, 3.0mm	
7	1319603	1	SNAP RING, 2.5mm	
7	1319604	1	SNAP RING, 2.0mm	
7	7029849	1	SNAP RING, 3.25mm	
7	7029850	1	SNAP RING, 3.75mm	
7	7029851	1	SNAP RING, 2.25mm	
7	7029852	1	SNAP RING, 2.75mm	
8	7026760	1	END SHIM	
9	7026758	AR	LIN. CLUTCH DISC, (transmission - 4WG92 TSC qty 6, 4WG98 TSC qty 8)	
10	7026759	AR	O. CLUTCH DISC, (transmission - 4WG92 TSC qty 6, 4WG98 TSC qty 8)	
11	8036575	1	PISTON	
12	7026761	2	PISTON RING	
13	7027266	1	COUPLING, (used with transmission - 4WG92 TSC)	
13	7026764	1	COUPLING, (used with transmission - 4WG98 TSC)	
14	7026769	1	ROLLER BEARING	

FIGURE 5-44. ZF TRANSMISSION - COUPLING GROUP 3 944E

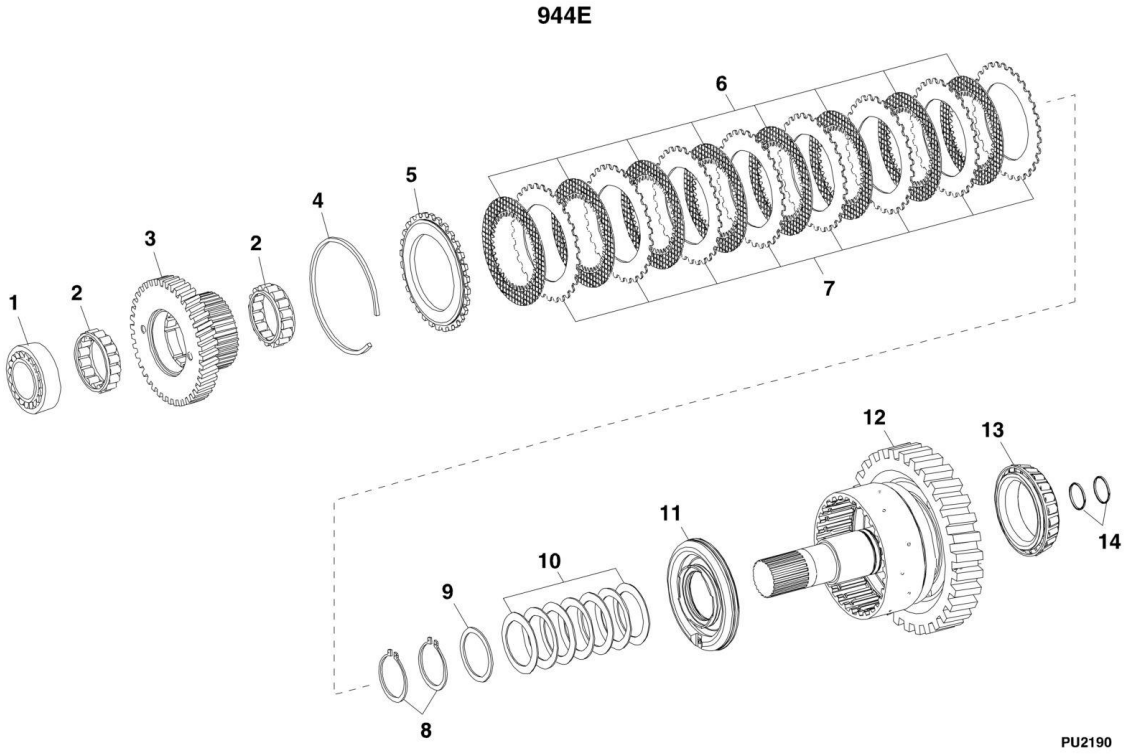

FIGURE 5-44. ZF TRANSMISSION - COUPLING GROUP 3 944E

ITEM	PART NUMBER	QTY	DESCRIPTION	REV
1	7026768	1	ROLLER BEARING	
2	7026767	2	ROLLER BEARING	
3	1319619	1	DISC CARRIER	
4	1319600	1	SNAP RING, 3.5mm	
4	1319601	1	SNAP RING, 3.5mm	
4	1319602	1	SNAP RING, 3.0mm	
4	1319603	1	SNAP RING, 2.5mm	
4	1319604	1	SNAP RING, 2.0mm	
4	7029849	1	SNAP RING, 3.25mm	
4	7029850	1	SNAP RING, 3.75mm	
4	7029851	1	SNAP RING, 2.25mm	
4	7029852	1	SNAP RING, 2.75mm	
5	7026760	1	END SHIM	
6	7026758	8	LIN. CLUTCH DISC	
7	7026759	8	O. CLUTCH DISC	
8	80304227	2	RETAINING RING	
9	7026766	1	WASHER	
10	7026765	7	CUP SPRING	
11	8036575	1	PISTON	
12	7026764	1	COUPLING	
13	7026769	1	ROLLER BEARING	
14	7026761	2	PISTON RING	

FIGURE 5-45. ZF TRANSMISSION - COUPLING GROUP 4 644E

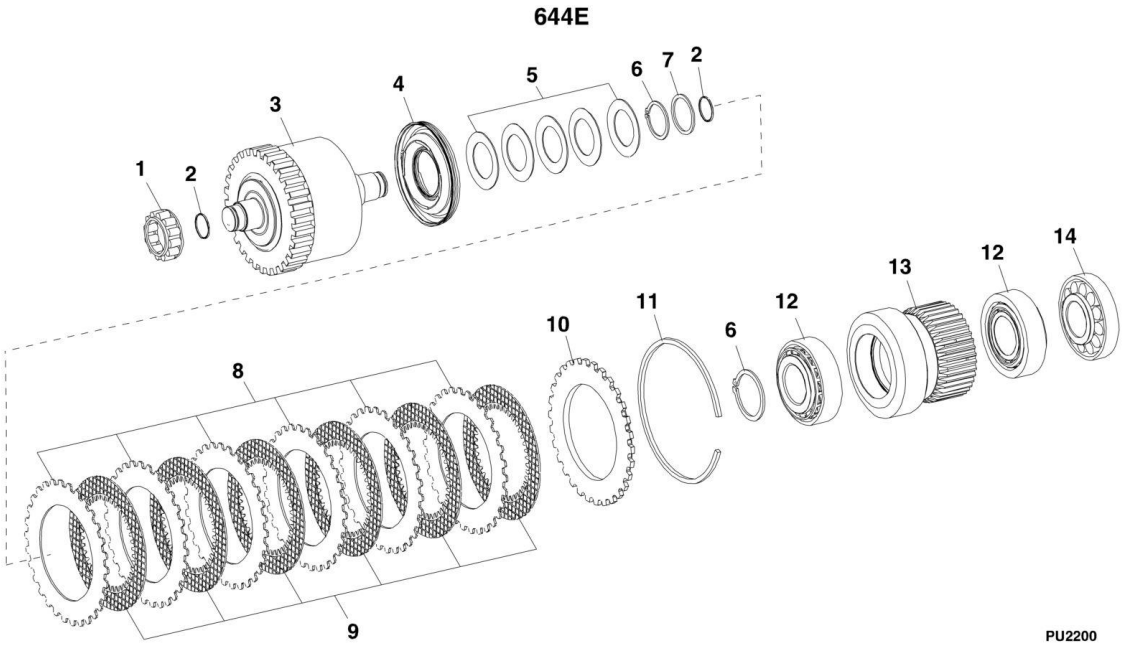

FIGURE 5-45. ZF TRANSMISSION - COUPLING GROUP 4 644E

ITEM	PART NUMBER	QTY	DESCRIPTION	REV
1	1319615	1	ROLLER BEARING	
2	7026761	2	PISTON RING	
3	7027268	1	COUPLING, (used with transmission - 4WG92 TSC)	
3	7026770	1	COUPLING, (used with transmission - 4WG98 TSC)	
4	8036575	1	PISTON	
5	1319595	5	CUP SPRING	
6	10731845	2	RETAINING RING	
7	1319596	1	SHIM, 2.0mm	
8	7026759	AR	O. CLUTCH DISC, (transmission - 4WG92 TSC qty 6, 4WG98 TSC qty 8)	
9	7026758	AR	LIN. CLUTCH DISC, (transmission - 4WG92 TSC qty 6, 4WG98 TSC qty 8)	
10	7026760	1	END SHIM	
11	1319600	1	SNAP RING, 3.5mm	
11	1319601	1	SNAP RING, 3.5mm	
11	1319602	1	SNAP RING, 3.0mm	
11	1319603	1	SNAP RING, 2.5mm	
11	1319604	1	SNAP RING, 2.0mm	
12	1319606	2	ROLLER CAGE	
13	1319635	1	DISC CARRIER	
14	1319636	1	ROLLER BEARING	

FIGURE 5-46. ZF TRANSMISSION - COUPLING GROUP 4 944E

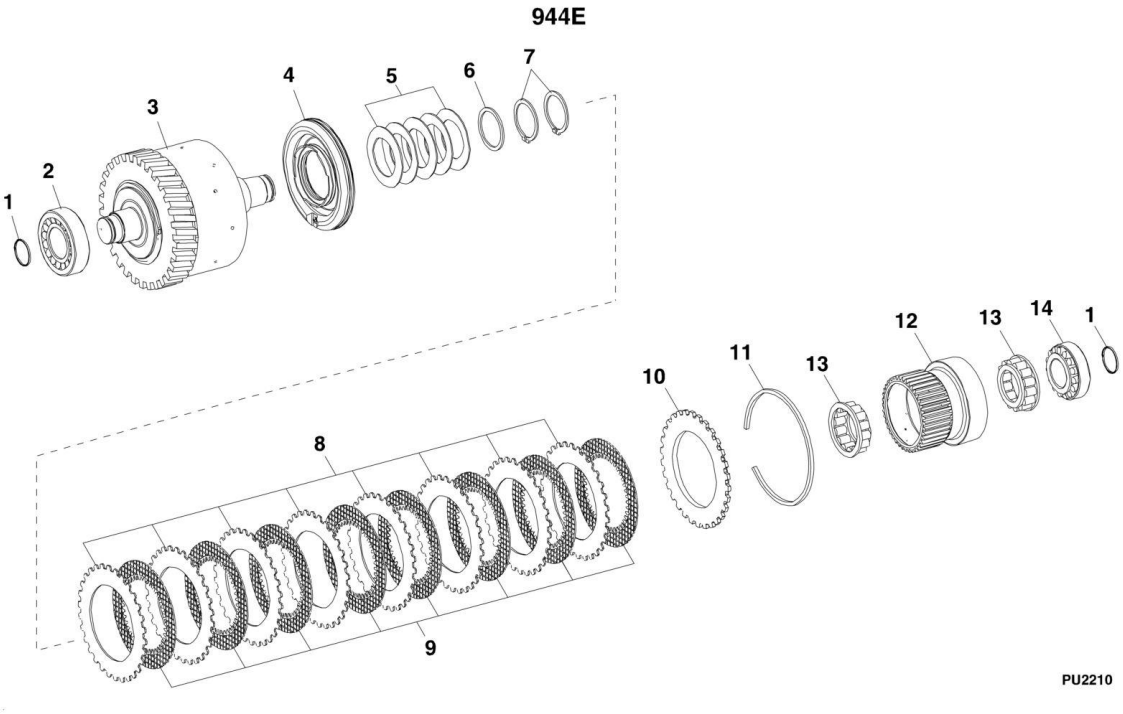

FIGURE 5-46. ZF TRANSMISSION - COUPLING GROUP 4 944E

ITEM	PART NUMBER	QTY	DESCRIPTION	REV
1	7026761	2	PISTON RING	
2	1319615	1	ROLLER BEARING	
3	7026770	1	COUPLING	
4	8036575	1	PISTON	
5	1319595	5	CUP SPRING	
6	1319596	1	SHIM, 2.0mm	
7	10731845	2	RETAINING RING	
8	7026759	8	O. CLUTCH DISC	
9	7026758	8	LIN. CLUTCH DISC	
10	7026760	1	END SHIM	
11	1319600	1	SNAP RING, 3.5mm	
11	1319601	1	SNAP RING, 3.5mm	
11	1319602	1	SNAP RING, 3.0mm	
11	1319603	1	SNAP RING, 2.5mm	
11	1319604	1	SNAP RING, 2.0mm	
12	1319635	1	DISC CARRIER	
13	1319606	2	ROLLER CAGE	
14	1319636	1	ROLLER BEARING	

FIGURE 5-47. ZF TRANSMISSION - REVERSING GEAR GROUP CV 644E

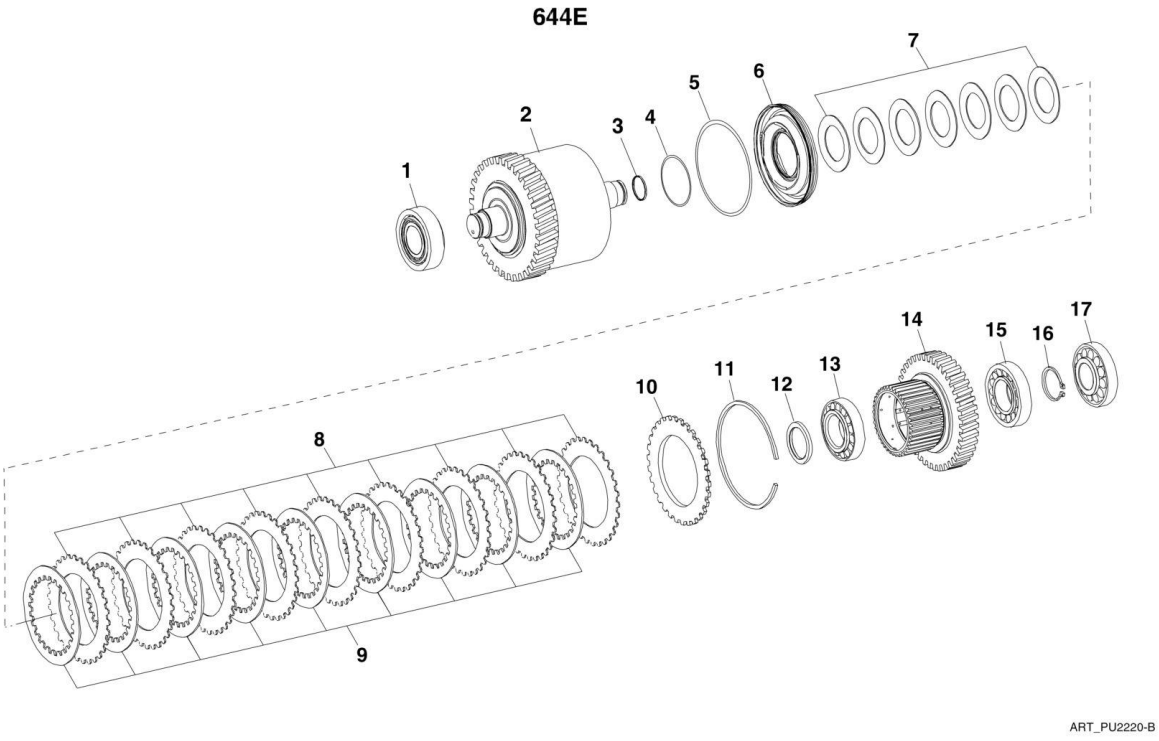

FIGURE 5-47. ZF TRANSMISSION - REVERSING GEAR GROUP CV 644E

ITEM	PART NUMBER	QTY	DESCRIPTION	REV
1	1319615	1	ROLLER BEARING	
2	7027258	1	COUPLING, (used with transmission - 4WG92 TSC)	
2	7026757	1	COUPLING, (used with transmission - 4WG98 TSC)	
3	7026761	1	PISTON RING	
4	1319593	1	O-RING	
5	1319594	1	O-RING	
6	8036575	1	PISTON	
7	1319595	7	CUP SPRING	
8	7026759	AR	O. CLUTCH DISC, (transmission - 4WG92 TSC qty 9, 4WG98 TSC qty 11)	
9	7027259	9	LIN. CLUTCH DISC, (used with transmission - 4WG92 TSC)	
9	7026758	11	LIN. CLUTCH DISC, (used with transmission - 4WG98 TSC)	
10	7026760	1	END SHIM	
11	1319600	1	SNAP RING, 3.5mm	
11	1319601	1	SNAP RING, 3.5mm	
11	1319602	1	SNAP RING, 3.0mm	
11	1319603	1	SNAP RING, 2.5mm	
11	1319604	1	SNAP RING, 2.0mm	
11	7029849	1	SNAP RING, 3.25mm	
11	7029850	1	SNAP RING, 3.75mm	
11	7029851	1	SNAP RING, 2.25mm	
11	7029852	1	SNAP RING, 2.75mm	
12	1319617	1	SUPPORT SHIM	
13	1319618	1	ROLLER BEARING	
14	1319638	1	DISC CARRIER	
15	1319620	1	ROLLER BEARING	
16	1319621	1	RETAINING RING, 3.20mm	
16	1319622	1	RETAINING RING, 3.10mm	
16	1319623	1	RETAINING RING, 3.00mm	
16	1319624	1	RETAINING RING, 2.90mm	
16	1319625	1	RETAINING RING, 2.80mm	
16	1319626	1	RETAINING RING, 2.70mm	
16	1319627	1	RETAINING RING, 2.60mm	
16	1319628	1	RETAINING RING, 2.50mm	
16	1319629	1	RETAINING RING, 2.40mm	
16	1319630	1	RETAINING RING, 2.30mm	
16	1319631	1	RETAINING RING, 2.20mm	
16	1319632	1	RETAINING RING, 2.10mm	
17	1319636	1	ROLLER BEARING	

FIGURE 5-48. ZF TRANSMISSION - REVERSING GEAR GROUP CV 944E

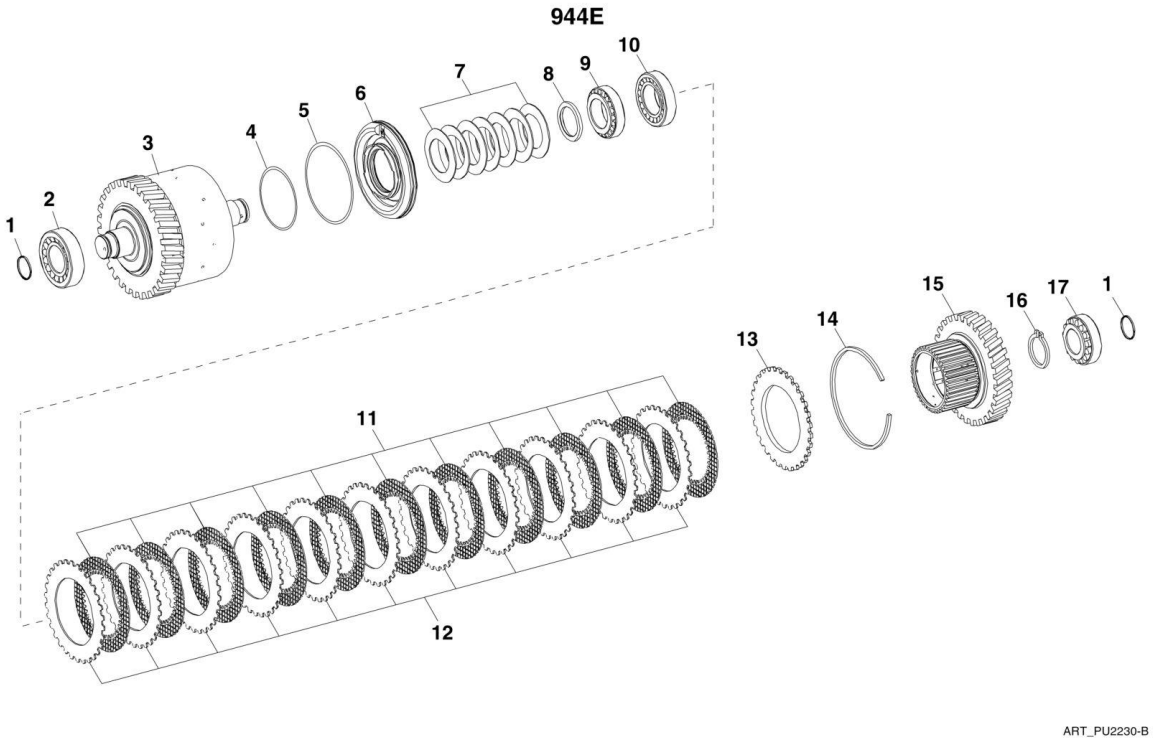

FIGURE 5-48. ZF TRANSMISSION - REVERSING GEAR GROUP CV 944E

ITEM	PART NUMBER	QTY	DESCRIPTION	REV
1	7026761	2	PISTON RING	
2	1319615	1	ROLLER BEARING	
3	7026757	1	COUPLING	
4	1319593	1	O-RING	
5	1319594	1	O-RING	
6	8036575	1	PISTON	
7	1319595	7	CUP SPRING	
8	1319617	1	SUPPORT SHIM	
9	1319618	1	ROLLER BEARING	
10	1319620	1	ROLLER BEARING	
11	7026758	11	LIN. CLUTCH DISC	
12	7026759	11	O. CLUTCH DISC	
13	7026760	1	END SHIM	
14	1319600	1	SNAP RING, 3.5mm	
14	1319601	1	SNAP RING, 3.5mm	
14	1319602	1	SNAP RING, 3.0mm	
14	1319603	1	SNAP RING, 2.5mm	
14	1319604	1	SNAP RING, 2.0mm	
14	7029849	1	SNAP RING, 3.25mm	
14	7029850	1	SNAP RING, 3.75mm	
14	7029851	1	SNAP RING, 2.25mm	
14	7029852	1	SNAP RING, 2.75mm	
15	1319638	1	DISC CARRIER	
16	1319621	1	RETAINING RING, 3.20mm	
16	1319622	1	RETAINING RING, 3.10mm	
16	1319623	1	RETAINING RING, 3.00mm	
16	1319624	1	RETAINING RING, 2.90mm	
16	1319625	1	RETAINING RING, 2.80mm	
16	1319626	1	RETAINING RING, 2.70mm	
16	1319627	1	RETAINING RING, 2.60mm	
16	1319628	1	RETAINING RING, 2.50mm	
16	1319629	1	RETAINING RING, 2.40mm	
16	1319630	1	RETAINING RING, 2.30mm	
16	1319631	1	RETAINING RING, 2.20mm	
16	1319632	1	RETAINING RING, 2.10mm	
17	1319636	1	ROLLER BEARING	

FIGURE 5-49. ZF TRANSMISSION - REVERSING GEAR GROUP CR 644E

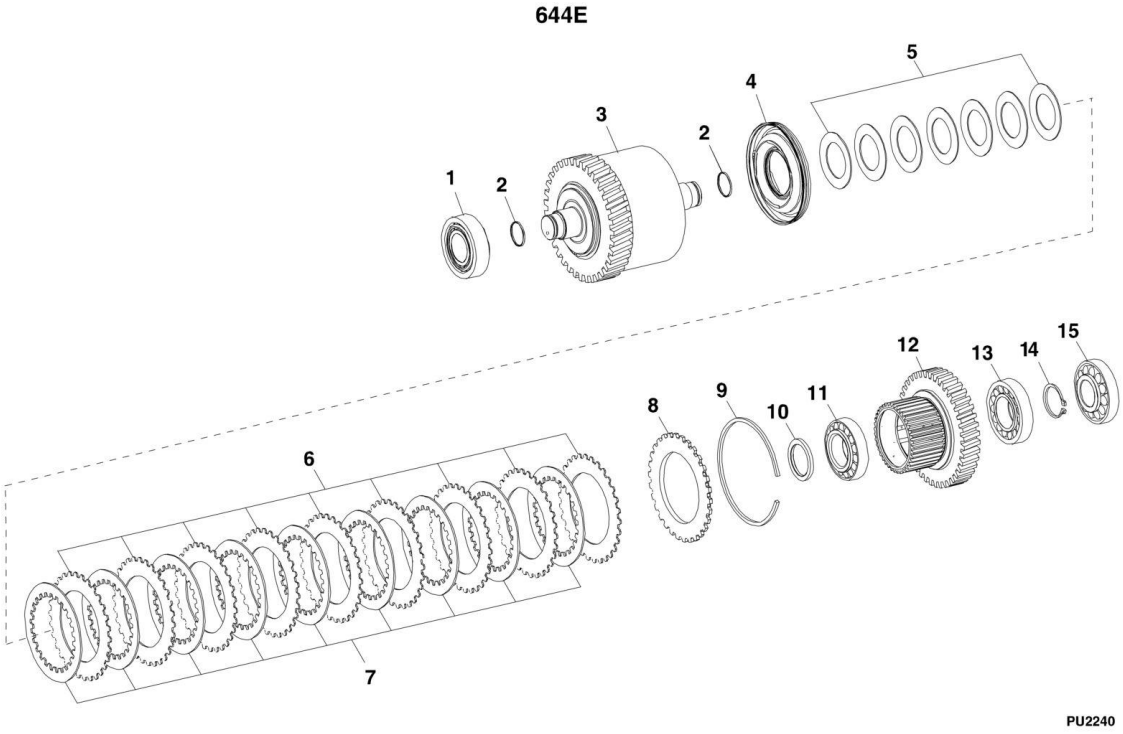

FIGURE 5-49. ZF TRANSMISSION - REVERSING GEAR GROUP CR 644E

ITEM	PART NUMBER	QTY	DESCRIPTION	REV
1	1319615	1	ROLLER BEARING	
2	7026761	2	PISTON RING	
3	7027260	1	COUPLING, (used with transmission - 4WG92 TSC)	
3	7026762	1	COUPLING, (used with transmission - 4WG98 TSC)	
4	8036575	1	PISTON	
5	1319595	7	CUP SPRING	
6	7026759	AR	O. CLUTCH DISC, (transmission - 4WG92 TSC qty 9, 4WG98 TSC qty 11)	
7	7027259	9	LIN. CLUTCH DISC, (used with transmission - 4WG92 TSC)	
7	7026758	11	LIN. CLUTCH DISC, (used with transmission - 4WG98 TSC)	
8	7026760	1	END SHIM	
9	1319600	1	SNAP RING, 3.5mm	
9	1319601	1	SNAP RING, 3.5mm	
9	1319602	1	SNAP RING, 3.0mm	
9	1319603	1	SNAP RING, 2.5mm	
9	1319604	1	SNAP RING, 2.0mm	
9	7029849	1	SNAP RING, 3.25mm	
9	7029850	1	SNAP RING, 3.75mm	
9	7029851	1	SNAP RING, 2.25mm	
9	7029852	1	SNAP RING, 2.75mm	
10	1319617	1	SUPPORT SHIM	
11	1319618	1	ROLLER BEARING	
12	1319638	1	DISC CARRIER	
13	1319620	1	ROLLER BEARING	
14	1319621	1	RETAINING RING, 3.20mm	
14	1319622	1	RETAINING RING, 3.10mm	
14	1319623	1	RETAINING RING, 3.00mm	
14	1319624	1	RETAINING RING, 2.90mm	
14	1319625	1	RETAINING RING, 2.80mm	
14	1319626	1	RETAINING RING, 2.70mm	
14	1319627	1	RETAINING RING, 2.60mm	
14	1319628	1	RETAINING RING, 2.50mm	
14	1319629	1	RETAINING RING, 2.40mm	
14	1319630	1	RETAINING RING, 2.30mm	
14	1319631	1	RETAINING RING, 2.20mm	
14	1319632	1	RETAINING RING, 2.10mm	
15	1319636	1	ROLLER BEARING	

FIGURE 5-50. ZF TRANSMISSION - REVERSING GEAR GROUP CR 944E

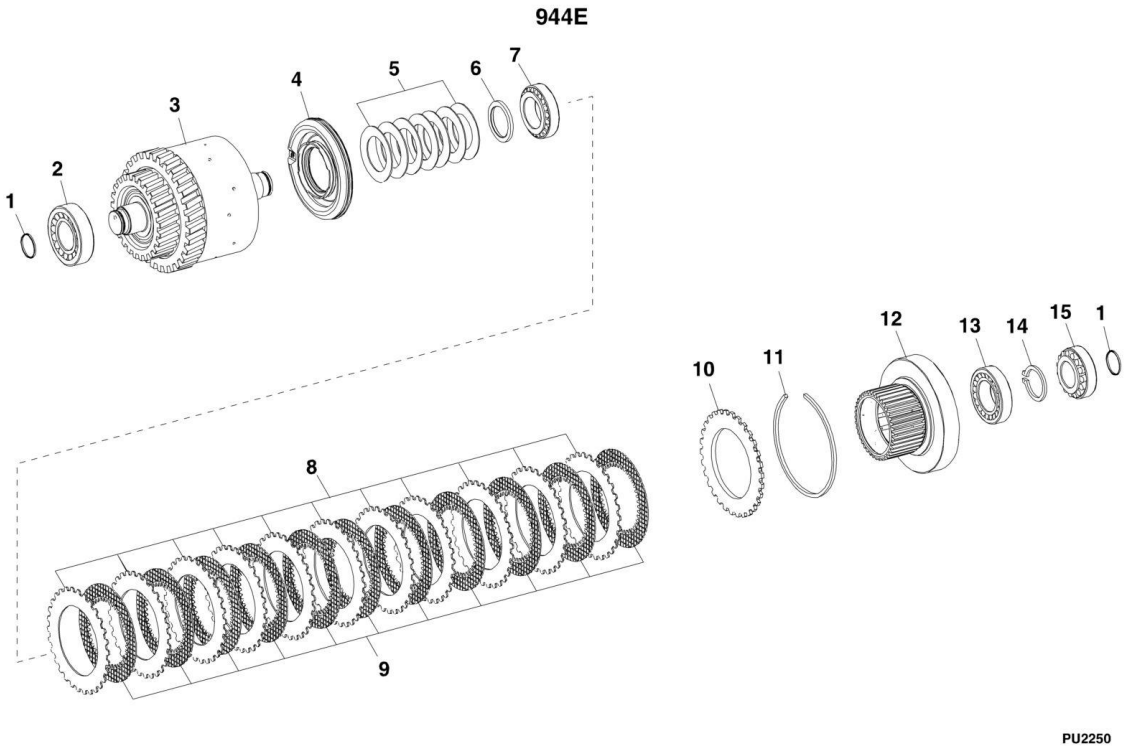

FIGURE 5-50. ZF TRANSMISSION - REVERSING GEAR GROUP CR 944E

ITEM	PART NUMBER	QTY	DESCRIPTION	REV
1	7026761	2	PISTON RING	
2	1319615	1	ROLLER BEARING	
3	7026762	1	COUPLING	
4	8036575	1	PISTON	
5	1319595	7	CUP SPRING	
6	1319617	1	SUPPORT SHIM	
7	1319618	1	ROLLER BEARING	
8	7026759	11	O. CLUTCH DISC	
9	7026758	11	LIN. CLUTCH DISC	
10	7026760	1	END SHIM	
11	1319600	1	SNAP RING, 3.5mm	
11	1319601	1	SNAP RING, 3.5mm	
11	1319602	1	SNAP RING, 3.0mm	
11	1319603	1	SNAP RING, 2.5mm	
11	1319604	1	SNAP RING, 2.0mm	
11	7029849	1	SNAP RING, 3.25mm	
11	7029850	1	SNAP RING, 3.75mm	
11	7029851	1	SNAP RING, 2.25mm	
11	7029852	1	SNAP RING, 2.75mm	
12	1319638	1	DISC CARRIER	
13	1319620	1	ROLLER BEARING	
14	1319621	1	RETAINING RING, 3.20mm	
14	1319622	1	RETAINING RING, 3.10mm	
14	1319623	1	RETAINING RING, 3.00mm	
14	1319624	1	RETAINING RING, 2.90mm	
14	1319625	1	RETAINING RING, 2.80mm	
14	1319626	1	RETAINING RING, 2.70mm	
14	1319627	1	RETAINING RING, 2.60mm	
14	1319628	1	RETAINING RING, 2.50mm	
14	1319629	1	RETAINING RING, 2.40mm	
14	1319630	1	RETAINING RING, 2.30mm	
14	1319631	1	RETAINING RING, 2.20mm	
14	1319632	1	RETAINING RING, 2.10mm	
15	1319636	1	ROLLER BEARING	

FIGURE 5-51. ZF TRANSMISSION - OIL PUMP

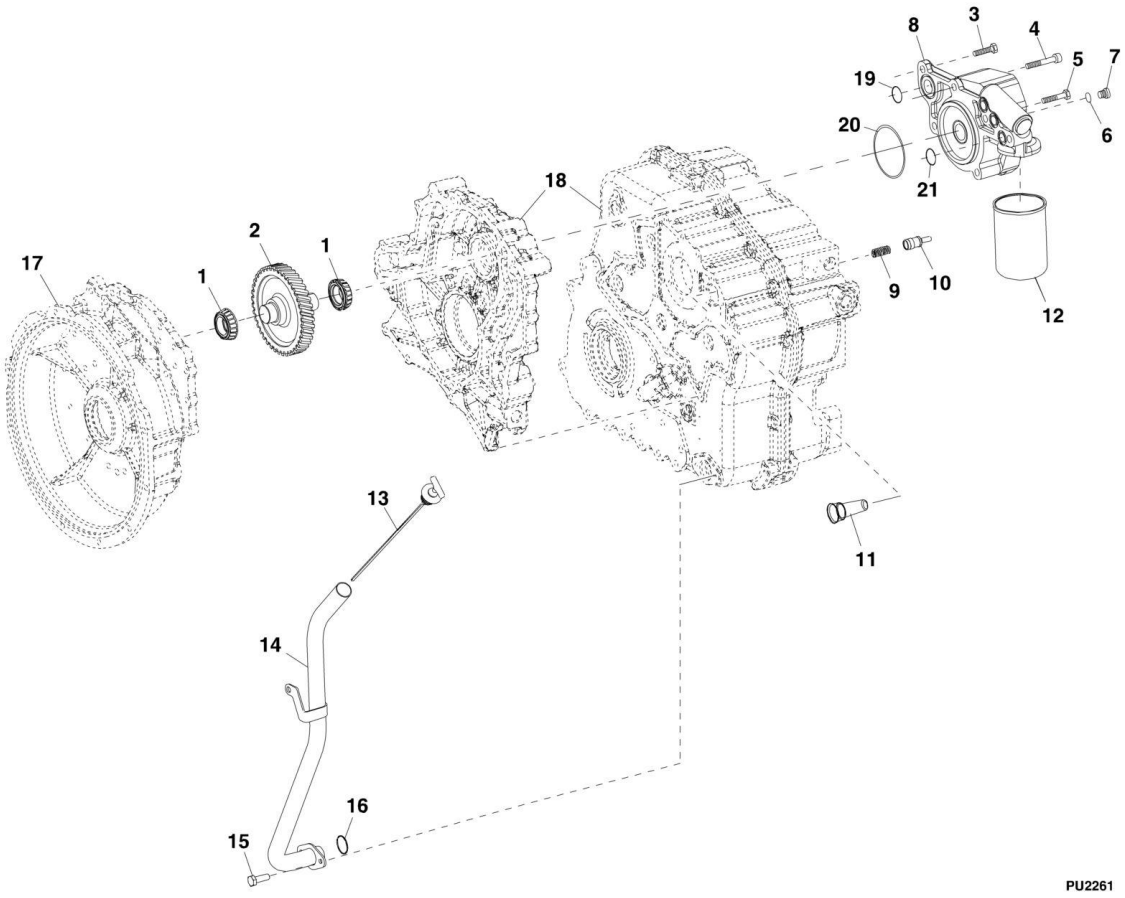

FIGURE 5-51. ZF TRANSMISSION - OIL PUMP

ITEM	PART NUMBER	QTY	DESCRIPTION	REV
1	1319608	2	ROLLER BEARING	
2	7026773	1	SHAFT	
3	80304394	1	HEX SCREW, M10X30	
4	7026793	4	CAPSCREW, M12X80	
5	7026794	1	HEX SCREW, M10X50	
6	10731709	2	O-RING	
7	1319670	2	SCREW PLUG, M10X1	
8	7026791	1	PUMP	
9	7026784	1	COMPRESSION SPRING	
10	7026783	1	PISTON	
11	7026782	1	VALVE	
12	1319726	1	FILTER	
13	8841322	1	OIL DIPSTICK	
14	1001095744	1	DIPSTICK TUBE	
15	1319585	2	CAPSCREW, M8X16	
16	1319581	1	O-RING	
17		Ref	BELL CONVERTER, (See ZF TRANSMISSION - ENGINE CONNECTION AND INPUT SHAFTS for Breakdown)	
18		Ref	GEARBOX HOUSING, (See ZF TRANSMISSION - GEARBOX HOUSING AND COUPLING LOCATION for Breakdown)	
19	1319719	1	O-RING	
20	7029417	1	O-RING	
21	7026792	3	O-RING	

FIGURE 5-52. ZF TRANSMISSION - CONTROL UNIT

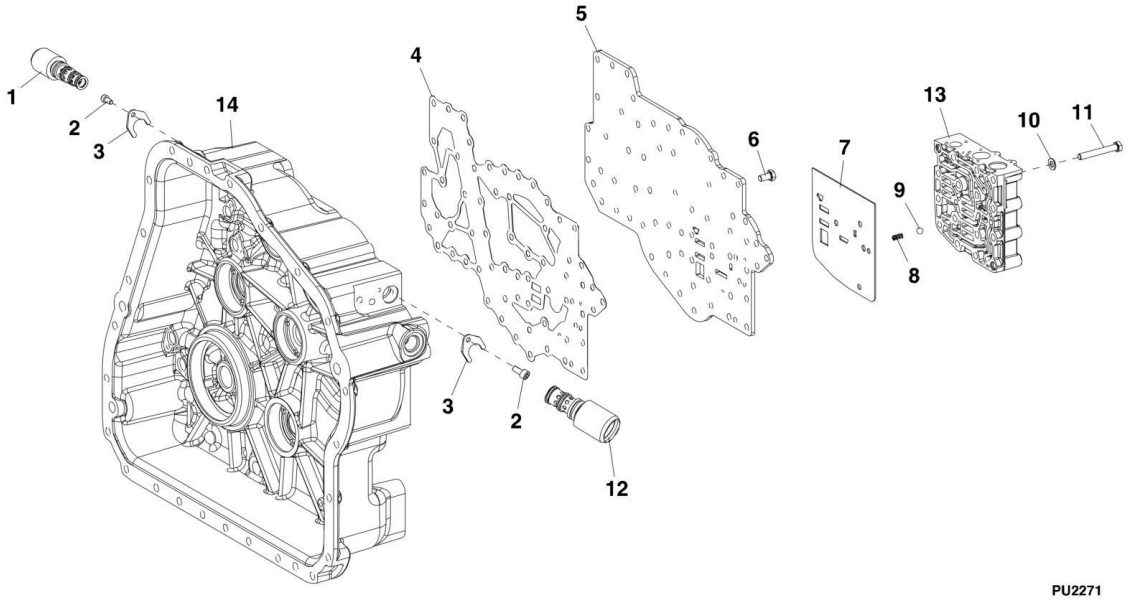

FIGURE 5-52. ZF TRANSMISSION - CONTROL UNIT

ITEM	PART NUMBER	QTY	DESCRIPTION	REV
1	8036529	3	SOLENOID VALVE	
2	7029715	4	CAPSCREW	
3	7029267	4	BRACKET	
4	7026776	1	GASKET	
5	7026777	1	PLATE	
6	7026780	46	HEX SCREW, M8X16	
7	7026779	1	INTERM. SHEET	
8	7026778	1	COMPRESSION SPRING	
9	10731761	1	BALL	
10	10732095	16	WASHER	
11	7026781	16	HEX SCREW	
12	8036528	1	SOLENOID VALVE	
13		Ref	GEARSHIFT SYSTEM, (See ZF TRANSMISSION - GEARSHIFT SYSTEM for Breakdown)	
14		Ref	GEARBOX HOUSING, (See ZF TRANSMISSION - GEARBOX HOUSING AND COUPLING LOCATION for Breakdown)	

FIGURE 5-53. ZF TRANSMISSION - GEARSHIFT SYSTEM

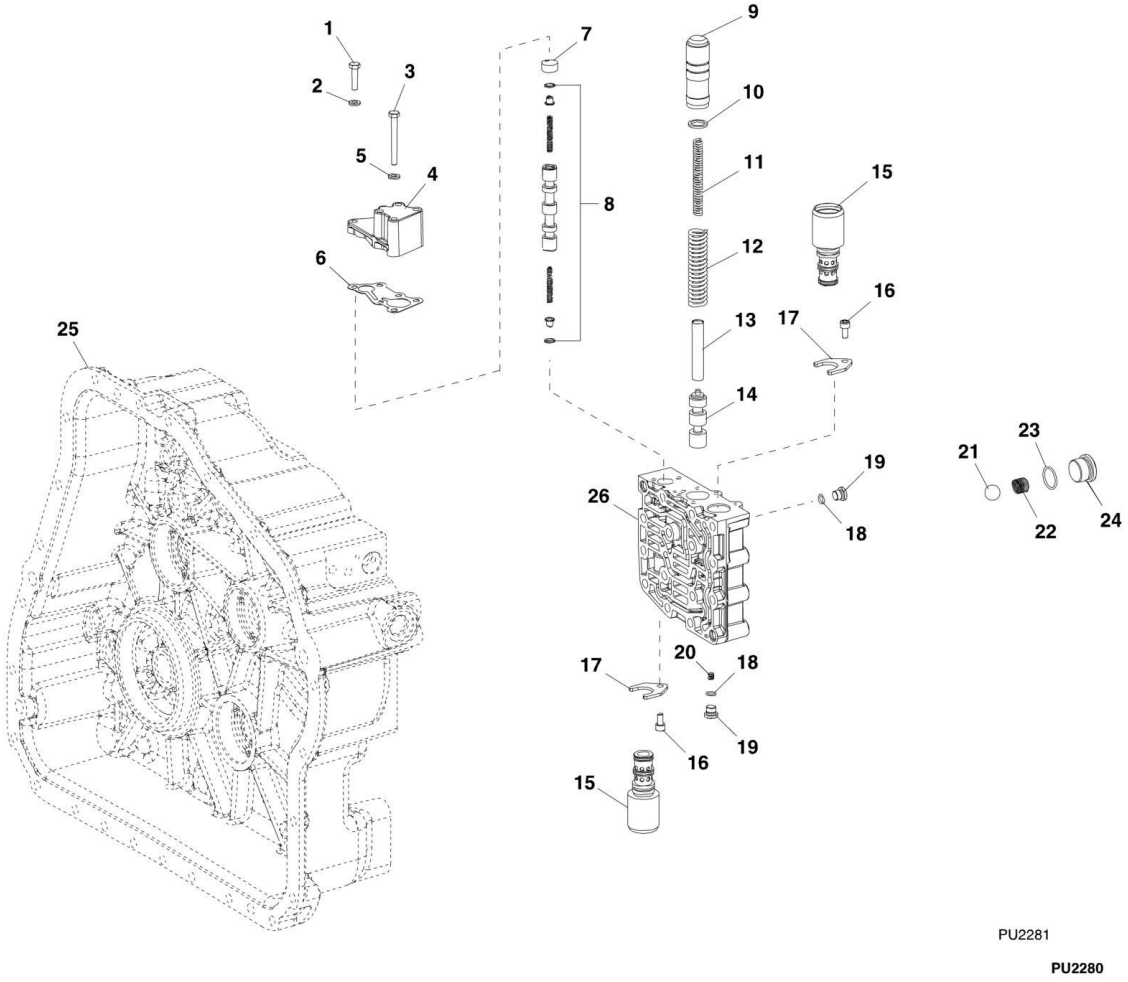

FIGURE 5-53. ZF TRANSMISSION - GEARSHIFT SYSTEM

ITEM	PART NUMBER	QTY	DESCRIPTION	REV
1	1319693	2	HEX SCREW, M6X25	
2	1319661	2	WASHER	
3	1321265	4	HEX SCREW, M6X55	
4	7026789	1	COVER	
5	1319661	4	WASHER	
6	7026788	1	GASKET	
7	7026787	1	SPACER	
8	1319694	1	VALVE	
9	7026790	1	PISTON	
10	1319685	1	WASHER, 2.0mm	
10	1319686	1	WASHER, 1.0mm	
10	1319687	1	WASHER, 0.5mm	
10	1319688	1	WASHER, 0.3mm	
10	1319689	1	WASHER, 0.2mm	
11	1319684	1	COMPRESSION SPRING	
12	1319683	1	COMPRESSION SPRING	
13	7026786	1	SLEEVE	
14	7026785	1	CONTROL PISTON	
15	8036528	2	SOLENOID VALVE	
16	7029715	2	CAPSCREW, M6X12	
17	7029267	2	BRACKET	
18	10731709	2	O-RING	
19	1319670	2	SCREW PLUG	
20	1319652	1	ORIFICE	
21	10732071	2	BALL	
22	10732072	2	COMPRESSION SPRING	
23	70000656	2	O-RING	
24	N.S.S.	2	SCREW PLUG, M24X1.5	
25		Ref	GEARBOX HOUSING, (See ZF TRANSMISSION - GEARBOX HOUSING AND COUPLING LOCATION for Breakdown)	
26	70022790	1	VALVE HOUSING	

FIGURE 5-54. ZF TRANSMISSION - TRANSFER BOX

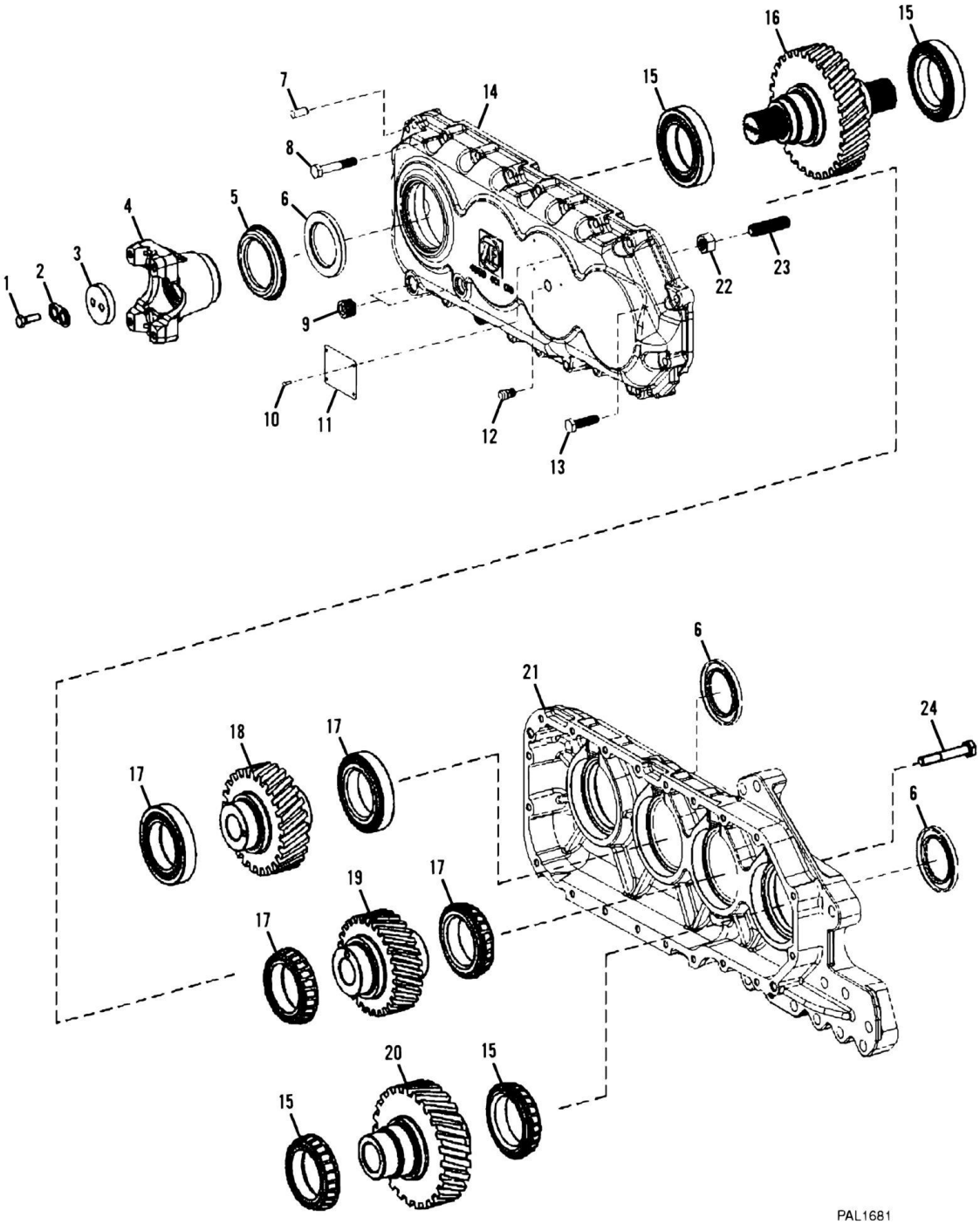

FIGURE 5-54. ZF TRANSMISSION - TRANSFER BOX

ITEM	PART NUMBER	QTY	DESCRIPTION	REV
	7026618	NLA	TRANSFER BOX, (no longer available, order 1001125962 for service), (includes items 1 thru 23) **(Prior to SN 0160041827)**	
	70023502	1	TRANSFER BOX, (includes all items) **(SN 0160041827 to Present)**	
1	10731959	4	HEX HD CAPSCREW, (two per side)	
2	1319649	2	TAB WASHER, (one per side)	
3	1319648	2	WASHER, (one per side)	
4	7027273	2	FLANGE, (one per side)	
5	1319647	2	SCREEN SHEET, (one per side)	
6	1320755	3	SHAFT SEAL	
7	1319571	2	CYLINDRICAL PIN	
8	70023801	19	HEX HD CAPSCREW, M10X50 **(Prior to SN 0160041827)**	
8	70023801	22	HEX HD CAPSCREW, M10X50 **(SN 0160041827 to Present)**	
9	1319578	2	PLUG	
10	1319573	4	STUD, 3X5	
11	N.S.S.	1	PLATE	
12	1319436	1	BREATHER	
13	70023800	1	HEX HD CAPSCREW, M10X30	
14	70020355	1	HOUSING **(Prior to SN 0160041827)**	
14	70023475	1	HOUSING **(SN 0160041827 to Present)**	
15	7026769	4	ROLLER BEARING	
16	7027271	1	OUTPUT SHAFT	
17		Ref	TAPERED ROLLER BEARING	
17	1320748	1	CUP	
17	1320754	1	CONE	
18	7027272	1	IDLER GEAR	
19	7027270	1	IDLER GEAR	
20		Ref	INPUT SHAFT	
20	70020493	1	INPUT GEAR	
20	70020036	1	SEAL	
21	70020354	1	HOUSING **(Prior to SN 0160041827)**	
21	70023474	1	HOUSING **(SN 0160041827 to Present)**	
22	7026578	1	HEX NUT, M16	
23	7026577	1	SLEEVE	
24	70023476	1	HEX BOLT, M10X65 **(SN 0160041827 to Present)**	
101	8526056	AR	GASKET ELIMINATOR LOCTITE 518, (not shown)	
102	8526052	AR	LOCTITE 277, (not shown)	

FIGURE 5-55. DRIVE SHAFTS

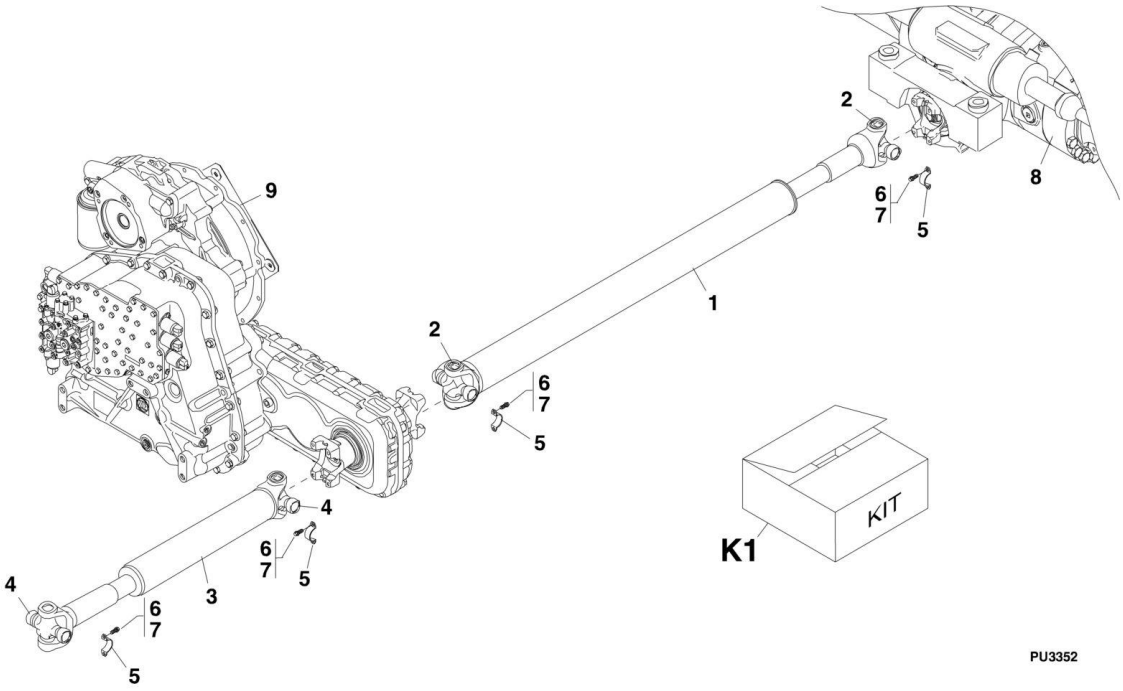

FIGURE 5-55. DRIVE SHAFTS

ITEM	PART NUMBER	QTY	DESCRIPTION	REV
1	7139913	1	REAR DRIVESHAFT, (includes item 2)	
2	8036433	2	CROSS AND BEARING KIT	
3	7139914	1	FRONT DRIVESHAFT, (includes item 4)	
4	8036433	2	CROSS AND BEARING KIT	
5		Ref	STRAP, (order kit 8880218-OM for replacement)	
6		Ref	SCREW, (torque to 32-42 lb-ft), (must replace when removed, do not re-torque), (use kit 880218 for replacement)	
7	8526007	AR	LOCTITE 242, (apply to item 6)	
8		Ref	REAR AXLE, (See REAR AXLE for Breakdown)	
9		Ref	TRANSMISSION, (See ZF TRANSMISSION for Breakdown)	
K1	8880218-OM	4	STRAP KIT, (includes qty 2 of item 5 and qty 4 of item 6)	

FIGURE 5-56. TIRE AND RIMS 644E (Prior to SN 0160039830, Excluding 0160036724, 0160036811, 0160036907 and 0160037012)

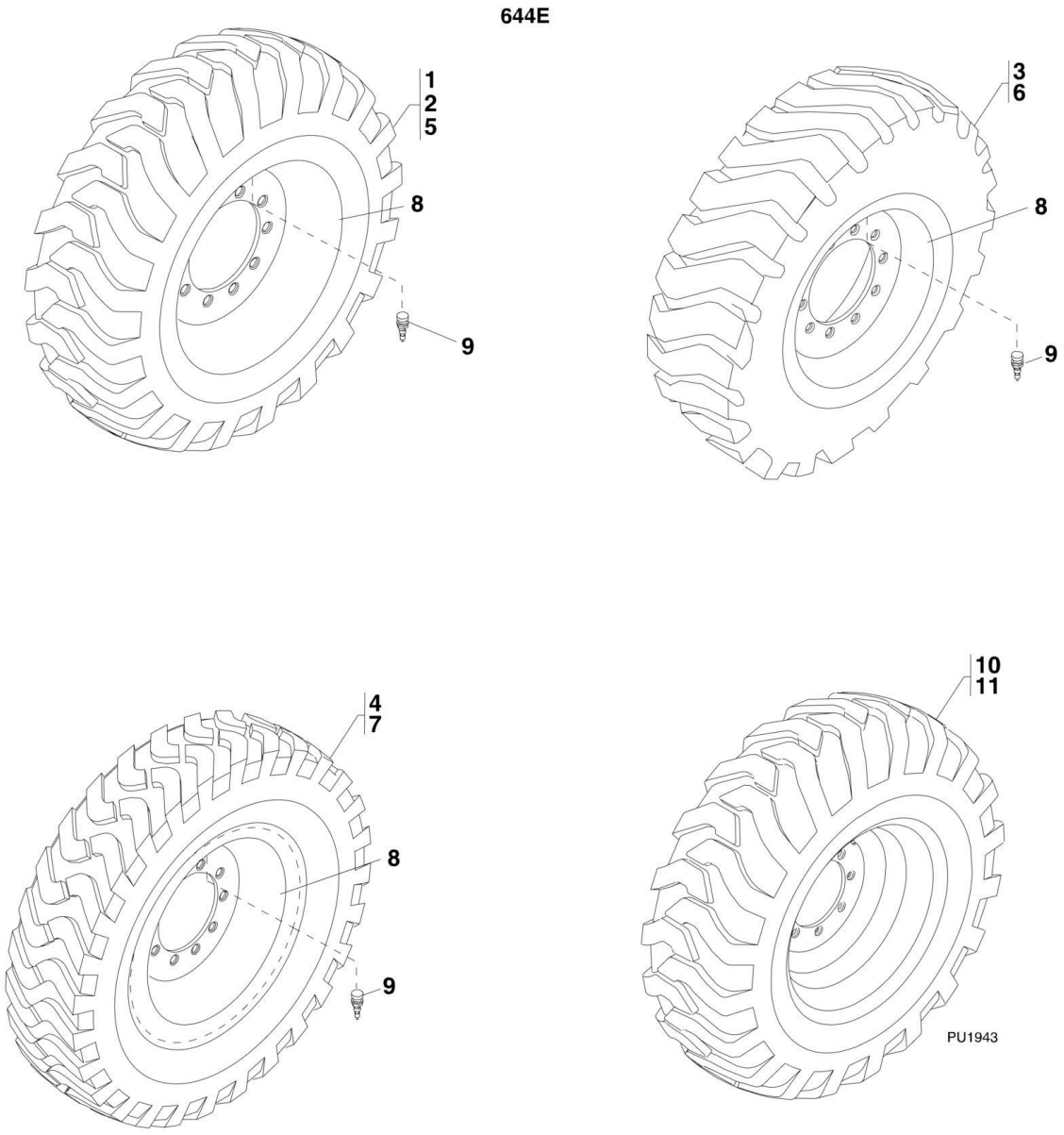

FIGURE 5-56. TIRE AND RIMS 644E (Prior to SN 0160039830, Excluding 0160036724, 0160036811, 0160036907 and 0160037012)

ITEM	PART NUMBER	QTY	DESCRIPTION	REV
	7139605	2	GRADER PNEUMATIC TIRE AND WHEEL ASSY, (right side) - 13.00-24,12 PLY, G-2, (includes items 5, 8 & 9)	F
	7139606	2	GRADER PNEUMATIC TIRE AND WHEEL ASSY, (left side) - 13.00-24,12 PLY, G-2, (includes items 5, 8 & 9)	F
	4520405	4	ROCK PNEUMATIC TIRE AND WHEEL ASSY, 13.00-24,12 PLY, G-3, (includes items 6, 8 & 9)	B
	7300704	4	RADIAL PNEUMATIC TIRE AND WHEEL ASSY, 13.00-24, 12 PLY, (includes items 7, 8 & 9)	E
1	7139739	2	GRADER FOAM FILLED TIRE AND WHEEL ASSY, (right side) - 13.00-24, 12 PLY, (complete only)	D
2	7139740	2	GRADER FOAM FILLED TIRE AND WHEEL ASSY, (left side) - 13.00-24, 12 PLY, (complete only)	D
3	7301845	4	ROCK FOAM FILLED TIRE AND WHEEL ASSY, 13.00-24, 12 PLY, (complete only), (includes items 6, 8 & 9)	C
4	4520407	4	RADIAL FOAM FILLED TIRE AND WHEEL ASSY, 13.00-24, 12 PLY, (complete only), (includes items 7 thru 9)	B
5	8780031	1	GRADER TIRE, 13.00-24 TG 12 PLY, G-2	
6	8780045	1	ROCK TREAD TIRE, 13.00-24, 12 PLY	
7	8780264	1	STEEL BELTED RADIAL TIRE, 13R24	
8	7301055	1	RIM, 9X24, 1.06 OFFSET, 9mm THICK	
9	8786514	1	VALVE STEM	
10	4520652	1	RH SOLID TIRE AND WHEEL ASSY	C
11	4520653	1	LH SOLID TIRE AND WHEEL ASSY	C
N1	Note	Ref	**ASSEMBLIES MAY REQUIRE BALLAST/FOAM FILLING TO MANUFACTURER'S SPECIFICATIONS PRIOR TO INSTALLING ON A MACHINE. REFER TO OPERATION AND SAFETY OR SERVICE MANUALS. PURCHASE INDIVIDUAL TIRE AND/OR RIM ONLY IF ABLE TO FOAM FILL TIRE AND WHEEL ASSEMBLY, OTHERWISE, PURCHASE COMPLETE ASSEMBLY.**	

FIGURE 5-57. TIRE AND RIMS 644E (SN 0160039830 to Present, Including 0160036724, 0160036811, 0160036907 and 0160037012)

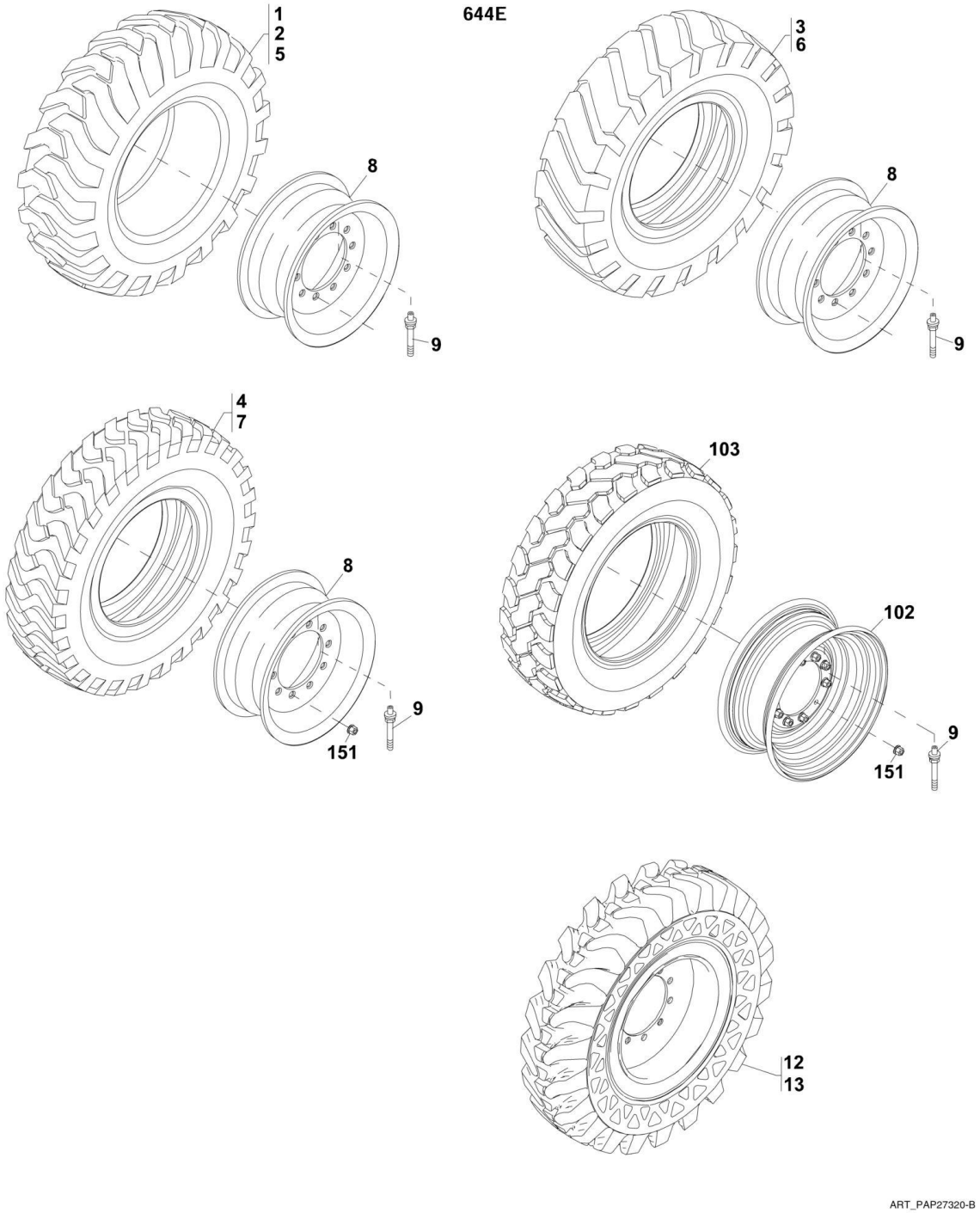

FIGURE 5-57. TIRE AND RIMS 644E (SN 0160039830 to Present, Including 0160036724, 0160036811, 0160036907 and 0160037012)

ITEM	PART NUMBER	QTY	DESCRIPTION	REV
	7138658	2	GRADER PNEUMATIC TIRE AND WHEEL ASSY, (right side) - 13.00-24,12 PLY, G-2, (includes items 5, 8 & 9)	D
	7138659	2	GRADER PNEUMATIC TIRE AND WHEEL ASSY, (left side) - 13.00-24,12 PLY, G-2, (includes items 5, 8 & 9)	D
	7139168	4	ROCK PNEUMATIC TIRE AND WHEEL ASSY, 13.00-24,12 PLY, G-3, (includes items 6, 8 & 9)	C
	4520412	4	RADIAL PNEUMATIC TIRE AND WHEEL ASSY, 13.00-24, 12 PLY, (includes items 7, 8 & 9)	A
	1001100324	1	TIRE AND RIM ASSY, 370/75-28, 14 PLY, (includes items 9, 102 & 103)	C
	1001121085	1	TIRE AND RIM ASSY, 370/75-28, 14 PLY, FOAM FILLED, 464 lb, (includes items 9, 102 & 103)	A
	1001151107	4	SOLIDEAL TIRE SET, 13.00-24, (includes items 12, 13, 151 & 152)	A
1	7139159	2	GRADER FOAM FILLED TIRE AND WHEEL ASSY, (right side) - 13.00-24, 12 PLY, (includes items 5, 8 & 9)	D
2	7139160	2	GRADER FOAM FILLED TIRE AND WHEEL ASSY, (left side) - 13.00-24, 12 PLY, (includes items 5, 8 & 9)	D
3	4520319	4	ROCK FOAM FILLED TIRE AND WHEEL ASSY, 13.00-24, 12 PLY, (includes items 6, 8 & 9)	B
4	4520413	4	RADIAL FOAM FILLED TIRE AND WHEEL ASSY, 13.00-24, 12 PLY, (includes items 7, 8 & 9)	A
5	8780031	1	GRADER TIRE, 13.00-24, TG 12 PLY, G-2	
6	8780045	1	ROCK TREAD TIRE, 13.00-24, 12 PLY	
7	8780264	1	STEEL BELTED RADIAL TIRE, 13R24	
8	7301054	1	RIM, 9X24, 1.06 OFFSET, 9mm THICK	
9	8786514	1	VALVE STEM	
12	1001151099	2	LH SOLIDEAL TIRE AND WHEEL ASSY, 13.00-24	A
13	1001151100	2	RH SOLIDEAL TIRE AND WHEEL ASSY, 13.00-24	A
102	1001100005	1	RIM, 28X11, 1.18 OFFSET	
103	1001100284	1	TIRE, 370/75-28, 14 PLY	
151		Ref	WHEEL NUT, (See DRIVE TRAIN COMPONENTS for Breakdown)	
152		Ref	SPRING WASHER, (not shown), (See DRIVE TRAIN COMPONENTS for Breakdown)	
N1	Note	Ref	**ASSEMBLIES MAY REQUIRE BALLAST/FOAM FILLING TO MANUFACTURER'S SPECIFICATIONS PRIOR TO INSTALLING ON A MACHINE. REFER TO OPERATION AND SAFETY OR SERVICE MANUALS. PURCHASE INDIVIDUAL TIRE AND/OR RIM ONLY IF ABLE TO FOAM FILL TIRE AND WHEEL ASSEMBLY, OTHERWISE, PURCHASE COMPLETE ASSEMBLY.**	

FIGURE 5-58. TIRE AND RIMS

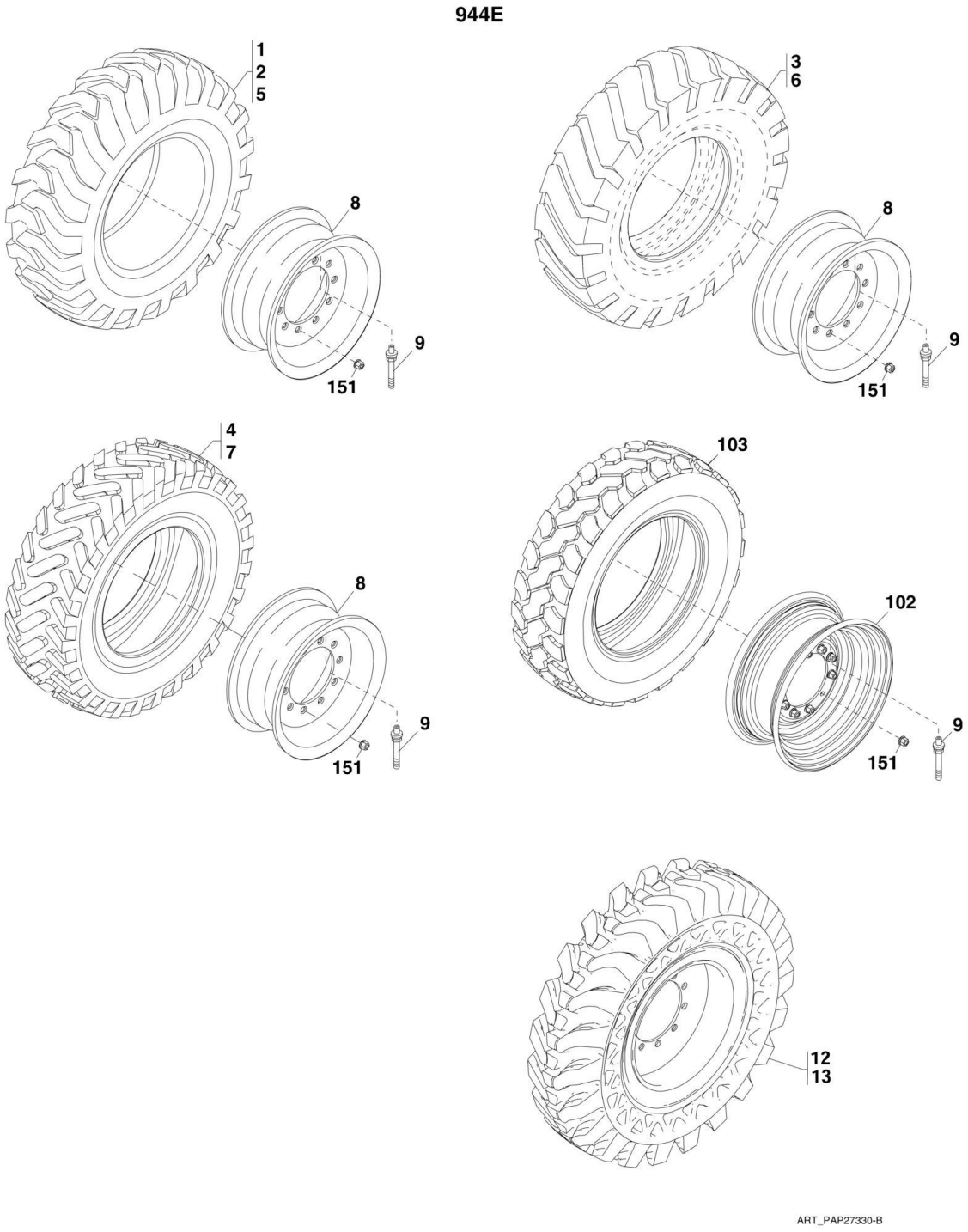

FIGURE 5-58. TIRE AND RIMS

ITEM	PART NUMBER	QTY	DESCRIPTION	REV
	7138660	2	GRADER PNEUMATIC TIRE AND WHEEL ASSY, (right side) - 15.5-25, 12 PLY, G-2, (includes items 5, 8 & 9)	
	7138661	2	GRADER PNEUMATIC TIRE AND WHEEL ASSY, (left side) - 15.5-25,12 PLY, G-2, (includes items 5, 8 & 9)	
	4520466	4	ROCK TREAD PNEUMATIC TIRE AND WHEEL ASSY 15.5-25, 12 PLY, (includes items 6, 8 & 9)	
	7139165	4	RADIAL PNEUMATIC TIRE AND WHEEL ASSY, 15.5R25, VUT 2 STAR, L-2, (includes items 7 thru 9)	
	1001100324	1	TIRE AND RIM ASSY, 370/75-28, 14 PLY, (includes items 9, 102 & 103)	C
	1001121085	1	TIRE AND RIM ASSY, 370/75-28, 14 PLY, FOAM FILLED, 464lb, (includes items 9, 102 & 103)	A
	1001151109	4	SOILDEAL TIRE SET, 13.00-24, (includes items 12, 13, 151 & 152)	A
1	7139161	2	GRADER FOAM FILLED TIRE AND WHEEL ASSY, (right side) - 15.5-25, 12 PLY, (complete only)	
2	7139162	2	GRADER FOAM FILLED TIRE AND WHEEL ASSY, (left side) - 15.5-25, 12 PLY, (complete only)	
3	4520467	4	ROCK FOAM FILLED TIRE AND WHEEL ASSY - 15.5-25, 12 PLY, (complete only)	
4	4520469	4	RADIAL FOAM FILLED TIRE AND WHEEL ASSY - 15.5-25, 12 PLY, (complete only)	
5	8780036	1	GRADER TIRE, 15.5-25 TG 12 PLY, L-2	
6	8780050	1	ROCK TREAD TIRE, 15.5-25, 12 PLY,	
7	8780048	1	RADIAL TIRE, 15.5R25, VUT 2 L-2	
8	7301056	1	RIM, 13X25, 1.18 OFFSET, 5/16 THICK	
9	8786514	1	VALVE STEM	
12	1001151103	2	LH SOLIDEAL TIRE AND WHEEL ASSY, 14.00-24	A
13	1001151104	2	RH SOLIDEAL TIRE AND WHEEL ASSY, 14.00-24	A
102	1001100005	1	RIM, 28X11, 1.18 OFFSET	
103	1001100284	1	TIRE, 370/75-28, 14 PLY	
151		Ref	WHEEL NUT, (See DRIVE TRAIN COMPONENTS for Breakdown)	
152		Ref	SPRING WASHER, (not shown), (See DRIVE TRAIN COMPONENTS for Breakdown)	
N1	Note	Ref	**ASSEMBLIES MAY REQUIRE BALLAST/FOAM FILLING TO MANUFACTURER'S SPECIFICATIONS PRIOR TO INSTALLING ON A MACHINE. REFER TO OPERATION AND SAFETY OR SERVICE AND MAINTENANCE MANUALS. PURCHASE INDIVIDUAL TIRE AND/OR RIM ONLY IF ABLE TO FOAM FILL TIRE AND WHEEL ASSEMBLY, OTHERWISE, PURCHASE COMPLETE ASSEMBLY.**	

SECTION 6 - CAB

FIGURE 6-1. CAB ASSEMBLY

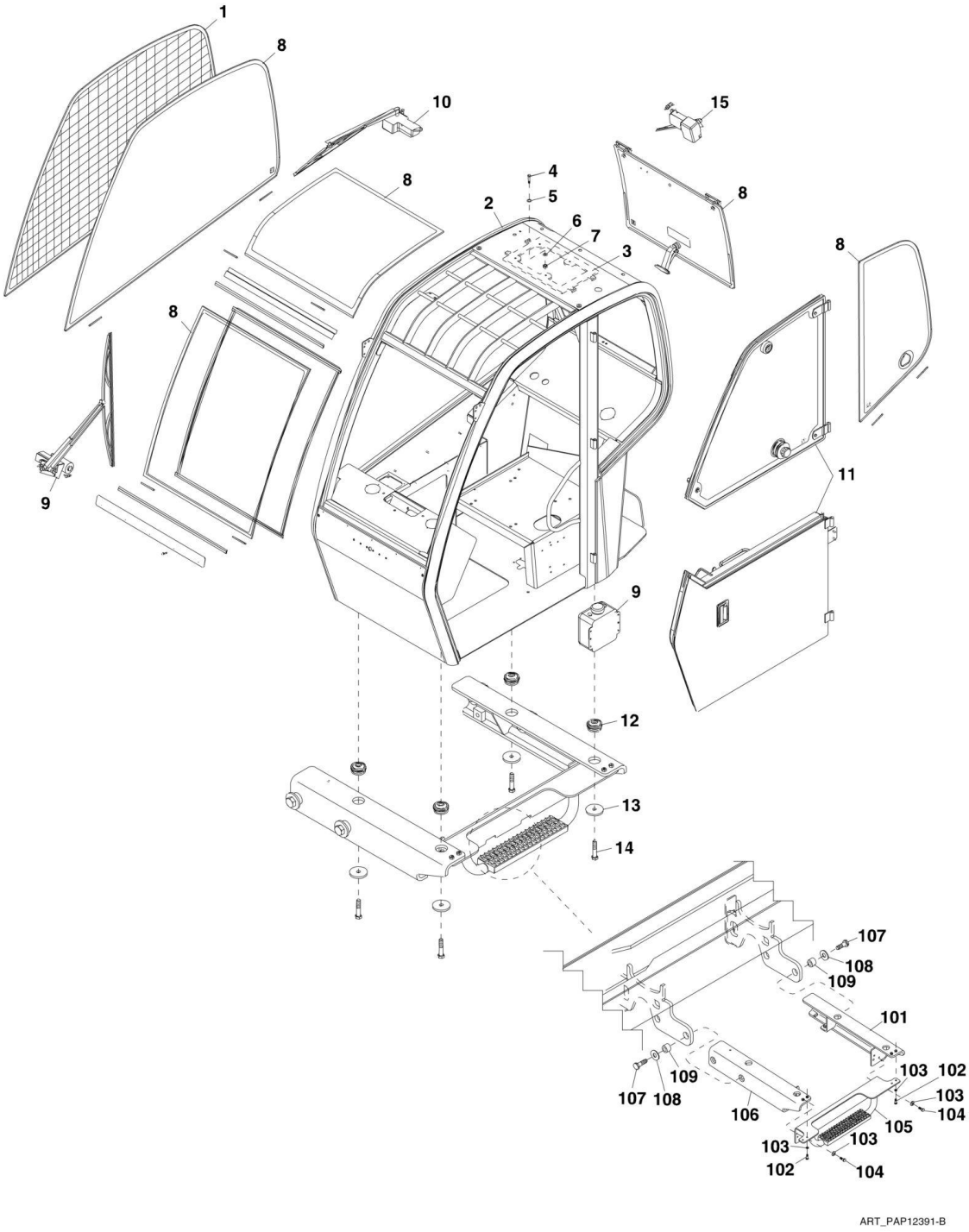

FIGURE 6-1. CAB ASSEMBLY

ITEM	PART NUMBER	QTY	DESCRIPTION	REV
	7151241	1	OPEN CAB ASSY, (includes items 1 & 2)	E
	7151242	1	ENCLOSED CAB ASSY, (includes items 2 & 8 thru 11)	G
1	7151317	1	WINDOW MESH	
2	7151279	1	CAB WELDMENT	
3	4341074	1	MANUAL BOX SUPPORT MOUNT	
4	0641406	4	HEX HD CAPSCREW, 1/4-20X3/4	
5	8866266	4	WEATHER TIGHT WASHER, 1/4	
6	4751400	4	FLAT WASHER, 1/4	
7	8305624	4	HEX LOCKNUT, 1/4-20	
8		Ref	CAB GLASS ASSY, (See CAB GLASS for Breakdown)	
9		Ref	FRONT WINDSHEILD WIPER ASSY, (See FRONT WINDSHIELD WIPER ASSEMBLY for Breakdown)	
10		Ref	SKYLIGHT WIPER ASSY, (See SKYLIGHT WIPER ASSEMBLY for Breakdown)	
11		Ref	DOOR ASSY, (See DOOR ASSEMBLY for Breakdown)	
12	8278041	4	CAB ISOLATOR	
13	7129441	4	REBOUND WASHER	
14	8310375	4	HEX HD CAPSCREW, 3/4-10X3-3/4, GR8	
15		Ref	REAR WINDOW WIPER ASSY, (See REAR WINDOW for Breakdown)	
101	7300327	1	CAB REAR SUPPORT	
102	8310164	4	HEX HD CAPSCREW, M12X35, GR8.8, (torque to 59-106 Nm)	
103	8310308	8	PLAIN WASHER, 1/2	
104	8310652	4	HEX HD CAPSCREW, M12X4, GR10.9, (torque to 59-106 Nm)	
105	7300793	1	CAB MOUNT STEP	
106	7300326	1	CAB FRONT SUPPORT	
107	8310285	4	HEX HD CAPSCREW, 1.25X7- 4, GR8	
108	7300573	4	CAB SUPPORT WASHER	
109	7300439	4	CAB MOUNT SHEER PIN	

FIGURE 6-2. SOFT CAB ENCLOSURE

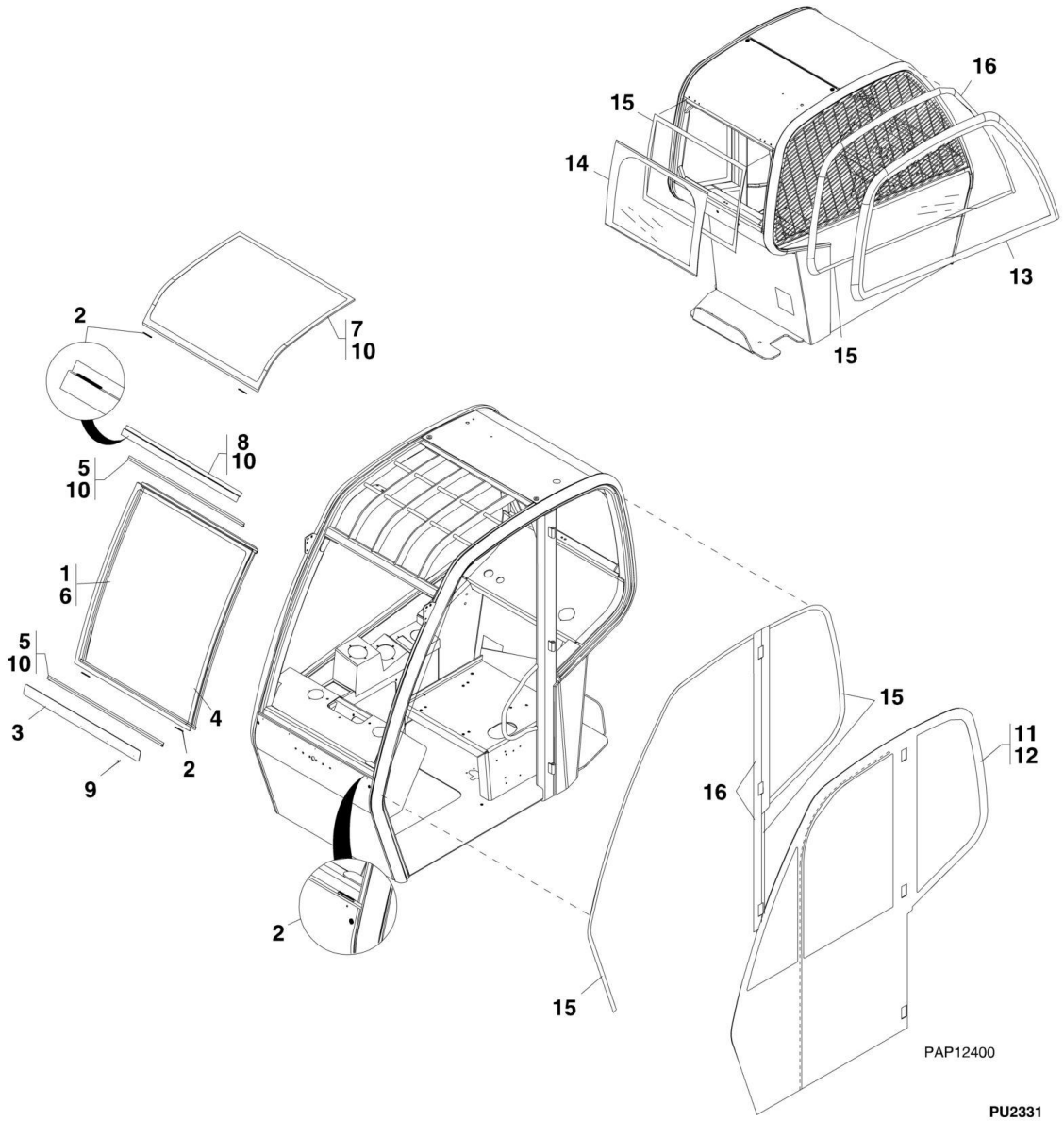

FIGURE 6-2. SOFT CAB ENCLOSURE

ITEM	PART NUMBER	QTY	DESCRIPTION	REV
	7151276	1	SOFT CAB ENCLOSURE KIT, (includes all items)	AA
1	7301730	1	SOFT CAB GLASS KIT, (includes items 2 thru 10)	AB
2	8035490	4	SETTING BLOCK, 1/8X1/4X2	
3	8036658	1	WINDSHIELD RETAINER, (lower)	
4	8036659	1	WINDSHIELD SEAL, DOUBLE D	
5	8036660	2	WINDSHIELD SEAL, COMPRESSION D	
6	8036663	1	WINDSHIELD GLASS	
7	8036666	1	SKYLIGHT GLASS	
8	8036667	1	WINDSHIELD RETAINER, (upper)	
9	8037204	5	SELF TAPPING SCREW, #10-16X3/4	
10	8035523	AR	BLACK URETHANE SEALANT, (apply to items 4, 5, 7 & 8)	
11	7301731	1	SOFT CAB VINYL KIT, (includes items 12 thru 16)	AB
12	8036720	1	LH VINYL ENCLOSURE, (includes items 15 & 16)	
13	8036721	1	RH VINYL ENCLOSURE, (includes items 15 & 16)	
14	8036722	1	REAR VINYL ENCLOSURE, (includes item 15)	
15	8036534	AR	SELF ADHESIVE VELCRO, HOOK STRIP, 1 WIDE, (order by linear foot)	
16	8036535	AR	SELF ADHESIVE VELCRO, HOOK STRIP, 2 WIDE, (order by linear foot)	

FIGURE 6-3. CAB GLASS

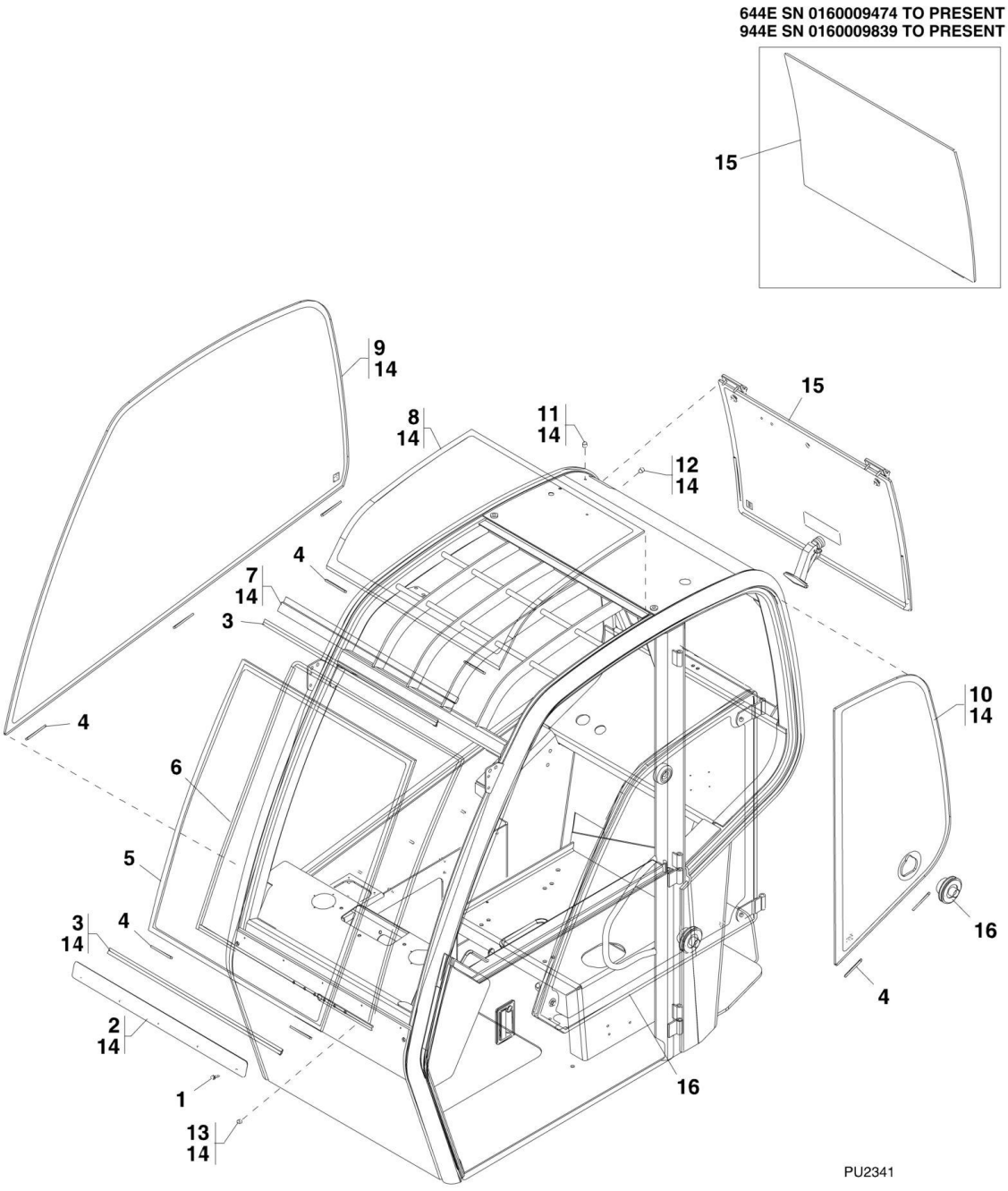

FIGURE 6-3. CAB GLASS

ITEM	PART NUMBER	QTY	DESCRIPTION	REV
	7301670	Ref	CAB GLASS ASSY (not available to order, see items 1 thru 15 for service) **(644E SN 17569 through 20123, SN 0160002514 through 0160009816; 944E SN 17569 through 20123, SN 0160002514 through 0160009818)**	
	0274385	Ref	CAB GLASS INSTALLATION, (not available to order, see items 1 thru 15 for service) **(644E SN 0160009474 to Present; 944E SN 0160009839 to Present)**	A
1	8037204	5	SELF TAPPING SCREW, #10-16X3/4	
2	8036658	1	LOWER WINDSHIELD RETAINER	
3	8036660	1	COMPRESSION D WINDSHIELD SEAL	
4	8035490	9	SETTING BLOCK, 1/8X1/4X2	
5	8036663	1	WINDSHIELD GLASS	
6	8036659	1	DOUBLE D WINDSHIELD SEAL	
7	8036667	1	UPPER WINDSHIELD RETAINER	
8	8036666	1	SKYLIGHT GLASS	
9	8036665	1	RIGHT SIDE GLASS	
10	8036664	1	LEFT SIDE GLASS	
11	8035640	3	HOLE PLUG, .375 DIA BLACK	
12	8036655	2	CAP PLUG, .236 DIA RED	
13	8036654	2	ROUND PUSH IN PLUG, .315DIA	
14	8035523	AR	BLACK URETHANE SEALANT, (apply to items 2, 3 & 7 thru 13)	
15		Ref	REAR WINDOW ASSY, (See REAR WINDOW for Breakdown)	
16		Ref	DOOR GLASS, (See DOOR ASSEMBLY for Breakdown)	

FIGURE 6-4. DOOR ASSEMBLY

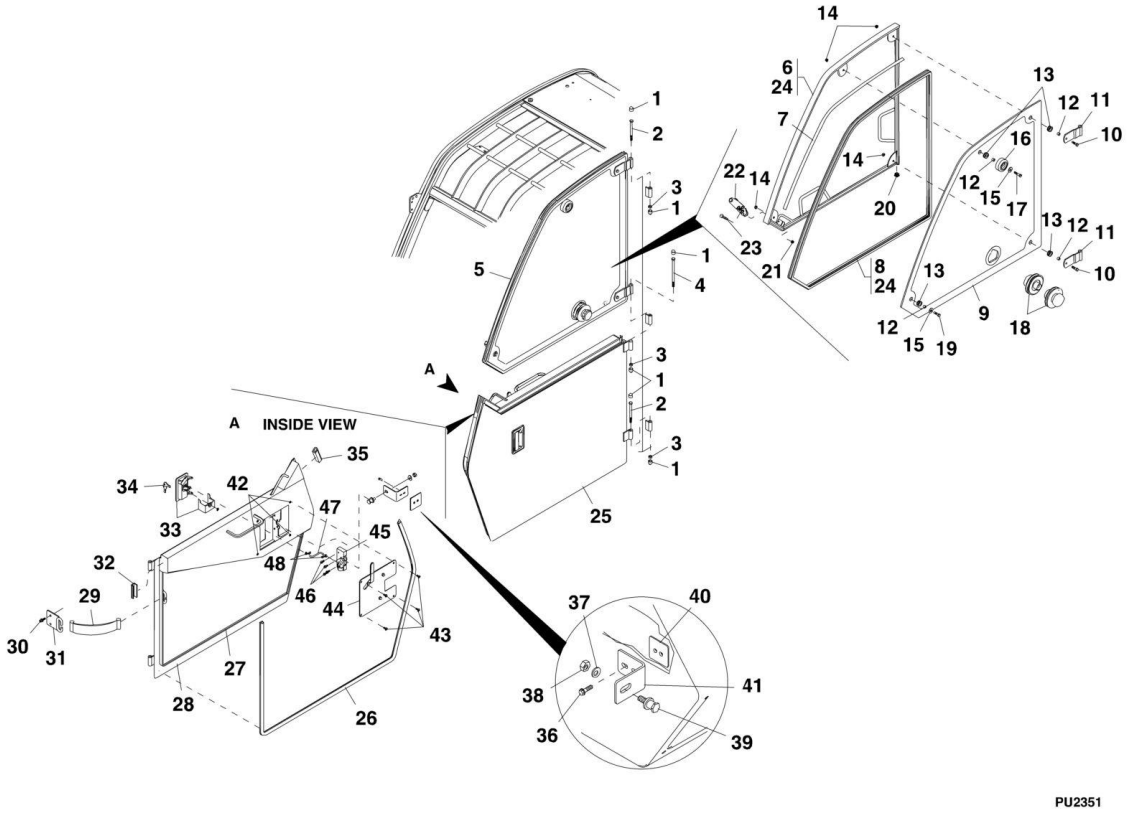

FIGURE 6-4. DOOR ASSEMBLY

ITEM	PART NUMBER	QTY	DESCRIPTION	REV
	7301671	1	DOOR ASSY, (includes all items)	C
1	8036065	6	HEX DOME CAP, 3/8 BLACK NYLON	
2	8035631	2	HEX HD CAPSCREW, 3/8-16X4-1/2	
3	8035632	3	HEX NUT, 3/8-16	
4	8036064	1	HEX HD CAPSCREW, 3/8-16X6-1/2, GR5	
5	7301811	1	UPPER DOOR ASSY, (includes items 6 thru 24)	
6	N.S.S.	1	UPPER DOOR WELDMENT	
7	8036711	1	DOOR GLASS BULB SEAL	
8	8036707	1	UPPER DOOR BULB SEAL	
9	8036706	1	UPPER DOOR GLASS	
10	8036700	2	HEX HD CAPSCREW, 5/16-18X1-1/4, GR8	
11	8036710	2	HINGE PIN, 3/8	
12	8036709	4	SPACER BUSHING	
13	8035477	4	RUBBER GROMMET, 0.50, 0.812, 1.062, 0.25	
14	8036701	4	HEX NUT, 5/16-18, GR8	
15	8036699	2	FLAT WASHER, 0.375, 0.875, 0.075	
16	8036703	1	RUBBER BUMPER	
17	8303715	1	HEX HD CAPSCREW, 5/16-18X1-1/2, GR5	
18	8036705	1	DOOR HOLD OPEN	
19	8035445	1	HEX HD CAPSCREW, 5/16-18X1, GR8	
20	8036704	1	SQUARE PLUG	
21	8036702	1	HEX NUT, 1/4-20, GR8	
22	8036712	1	UPPER DOOR LATCH ASSY	
23	8310136	1	TRUSS SCREW, 1/4-20X1-1/4	
24	8035523	AR	BLACK URETHANE SEALANT, (apply to items 6 & 8)	
25	7301812	1	LOWER DOOR ASSY, (includes items 26 thru 48)	B
26	8036692	1	LOWER DOOR BULB SEAL	
27	8036690	1	LOWER DOOR FOAM	
28	N.S.S.	1	LOWER DOOR WELDMENT	
29	8036688	1	DOOR RESTRAINT STRAP	
30	8036684	2	FLANGE BOLT, M8-1.25X20mm	
31	8036689	1	DOOR RESTRAINT WELDMENT	
32	8036693	1	LOWER DOOR REAR FILLER BULB SEAL	
33	8035441	NLA	PADDLE LATCH, (uses rectangular-shaped key), (no longer available, use 1001105892 for replacement)	
33	1001105892	1	LATCH ASSY, (uses oval-shaped key), (includes item 34)	
34	8342808	2	KEY, RECTANGULAR-SHAPED	
34	70021948	1	KEY, OVAL-SHAPED	
35	8036691	1	LOWER DOOR FRONT FILLER BULB SEAL	
36	8036696	2	FLANGE BOLT, 1/4-20X3/4	
37	8036061	1	PLAIN WASHER, 0.500 STD WIDE	
38	8035639	1	HEX LOCKNUT, 7/16-14	
39	8035637	1	STRIKER BOLT, 7/16-14X1-1/2	
40	8036059	1	PLATE WELDMENT STRIKER NUT	
41	8036687	1	DOOR STRIKER MOUNT	
42	8036685	4	RIVET NUT, M6X1.0	
43	8036656	4	PHILLIPS PAN HEAD BOLT, M6-1.0X16mm	
44	8036695	1	LOWER DOOR COVER ASSY	
45	8035439	1	DOOR LATCH	
46	8036105	4	TRUSS SCREW, 1/4-20X5/8, GR5	

ITEM	PART NUMBER	QTY	DESCRIPTION	REV
47	8036694	1	EXTERIOR LATCH LINKAGE	
48	8035659	2	ROD END RETAINER CLIP	

FIGURE 6-5. OPERATOR'S COMPARTMENT - INNER PANELS

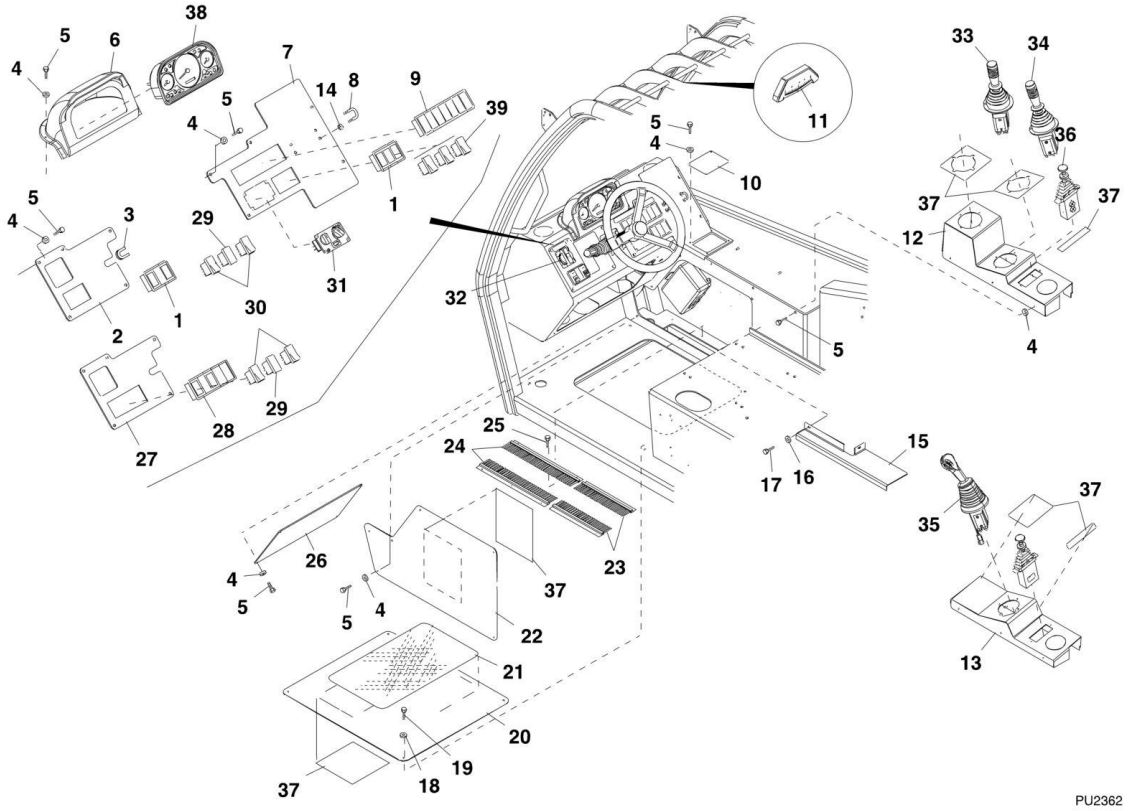

FIGURE 6-5. OPERATOR'S COMPARTMENT - INNER PANELS

ITEM	PART NUMBER	QTY	DESCRIPTION	REV
1	8223074	2	3 POSITION SWITCH BEZEL, **(644E SN 17569 through 20115, SN 0160002519 through 0160007267, Excluding 0160006857; 944E SN 18554 through 20123, SN 0160002514 through 0160007270, Excluding 0160005664)**	
2	7151250	1	LEFT DASH PANEL, **(644E SN 17569 through 20115, SN 0160002519 through 0160007267, Excluding 0160006857; 944E SN 18554 through 20123, SN 0160002514 through 0160007270, Excluding 0160005664)**	
3	10725268	1	LOOM, 1/4 OD	
4	8307219	31	PLAIN WASHER, M6	
5	8303544	32	HEX HD CAPSCREW, M6-1.0X20mm, PC8.8	
6	7151262	1	DASH COVER MOULDING	
7	7151337	1	RIGHT DASH PANEL	
8	1001102844	2	U-BOLT, 1/4-20 1-1/4	
9	8223075	1	7 POSITION SWITCH BEZEL	
10	7151313	1	BLANKING PLATE, (early production only)	
11	8466306	1	TILT ANGLE GAUGE	
12	7151273	1	MULTIPLE JOYSTICK PANEL	
13	7301762	1	SINGLE JOYSTICK PANEL	
14	8310382	8	FLANGE NUT	
15	7151280	1	SEAT MOUNTING PANEL	
16	8307221	2	PLAIN WASHER, M10	
17	8303798	2	HEX HD CAPSCREW, M10-1.5X25mm, PC8.8	
18	8307222	4	PLAIN WASHER, M8	
19	8303783	4	HEX HD CAPSCREW, M8-1.25X25mm, PC8.8	
20	7151271	1	FLOOR ACCESS PANEL	
21	10139087	1	ANTI-SLIP ADHESIVE MAT	
22	7151272	1	FUSE AND RELAY ACCESS PANEL	
23	7301279	2	SHORT BRUSH STRIP	
24	7138944	2	BRUSH STRIP	
25	8303607	10	HEX HD CAPSCREW, M6-1.0X25mm, PC8.8	
26	7151251	1	LOWER DASH PANEL	
27	3380542	1	LEFT DASH PANEL, **(644E SN 0160007291 to Present, Including 0160006857; 944E SN 0160007289 to Present, Including 0160005664)**	
28	4360569	1	5 POSITION BEZEL, **(644E SN 0160007291 to Present, Including 0160006857; 944E SN 0160007289 to Present, Including 0160005664)**	
29		Ref	ECM INDICATOR SWITCH, (See CONTROLS SECTION for Breakdown)	
30		Ref	PARK BRAKE AND TRANSMISSION DISCONNECT, (See ELECTRICAL SECTION for Breakdown)	
31		Ref	HEATER CONTROL PANEL, (See ELECTRICAL SECTION for Breakdown)	
32		Ref	STEER SELECT VALVE, (See HYDRAULIC CIRCUITS SECTION for Breakdown)	
33		Ref	FRONT JOYSTICK CONTROL VALVE, (See CONTROLS SECTION for Breakdown)	
34		Ref	REAR JOYSTICK CONTROL VALVE, (See CONTROLS SECTION for Breakdown)	
35		Ref	SINGLE JOYSTICK CONTROL VALVE, (See CONTROLS SECTION for Breakdown)	
36		Ref	FRAME/SWAY CONTROL VALVE, (See CONTROLS SECTION for	

ITEM	PART NUMBER	QTY	DESCRIPTION	REV
			Breakdown)	
37		Ref	JOYSTICK DECALS, (See DECALS SECTION for Breakdown)	
38		Ref	DASH PANEL, (See ELECTRICAL SECTION for Breakdown)	
39		Ref	WIPER SWITCHES, (See ELECTRICAL SECTION for Breakdown)	

FIGURE 6-6. OPERATOR'S SEAT (644E SN 17569 through 20123, SN 0160002514 through 0160013109; 944E SN 17569 through 20123, SN 0160002514 through 0160013106)

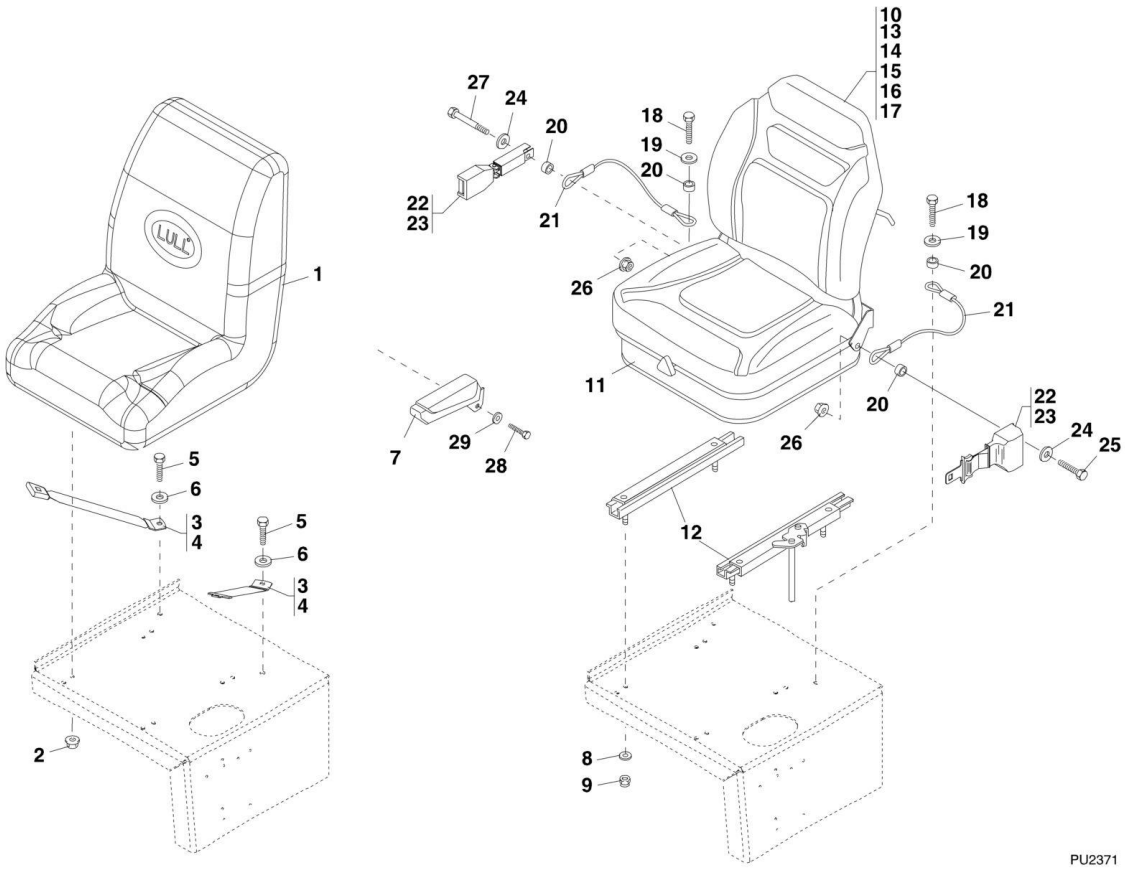

FIGURE 6-6. OPERATOR'S SEAT (644E SN 17569 through 20123, SN 0160002514 through 0160013109; 944E SN 17569 through 20123, SN 0160002514 through 0160013106)

ITEM	PART NUMBER	QTY	DESCRIPTION	REV
1	Not Available	NLA	STANDARD SEAT ASSY, (no longer available, use 2915056 for replacement or Kit K1 for service on OPERATOR'S SEAT), **(644E SN 0160013127 to Present; 944E SN 0160013131 to Present)**	
2	10705107	4	HEX NUT, FLANGE 5/16-18	
3	10239367	1	SEAT BELT, 2IN	
4	10725464	1	SEAT BELT, 3IN, (if equipped)	
5	10700303	2	HEX HD CAPSCREW, 7/16-14X1-1/4, GR5	
6	10701253	2	FLAT WASHER, 7/16	
7	7138858	1	ARM REST	
8	8307106	4	PLAIN WASHER, 5/16	
9	8305626	4	HEX LOCKNUT, 5/16-18	
10	Not Available	NLA	OPTIONAL SEAT ASSY, (no longer available, use Kit K1 for service on OPERATOR'S SEAT), **(644E SN 0160013127 to Present; 944E SN 0160013131 to Present)**	
11	8036009	1	BOOT, 60/76mm, (covers adjuster below seat)	
12	8036010	1	ADJUSTER, 6IN	
13	8036626	1	CUSHION/PAN ASSY, (includes both seats and back rests)	
14	8036011	1	DAMPER, (shock absorber)	
15	8036013	4	UP STOP BUMPER/DOWN STOP BUMPER ROLLERS, 7/16 DIA	
16	8036014	1	SPRINGS AND CABLE	
17	8036015	1	HANGER/KNOB/TENSION SHAFT KIT	
18	8303674	2	HEX HD CAPSCREW, 7/16-14X1-1/2, GR5	
19	8307205	2	PLAIN WASHER, 7/16	
20	7096491	4	SPACER	
21	7138883	2	SEAT BELT TETHER	
22	8864057	1	SEAT BELT, 2IN RETRACTABLE, (includes items 24 thru 27)	
23	8864058	1	SEAT BELT, 3IN RETRACTABLE, (if equipped), (includes items 24 thru 27)	
24	N.S.S.	2	PLAIN WASHER, 7/16, (included with seat belt)	
25	N.S.S.	1	HEX HD CAPSCREW, 7/16-20X1-1/2, GR5, (included with seat belt)	
26	N.S.S.	1	FLANGED HEX NUT, 7/16-20, (included with seat belt)	
27	N.S.S.	1	HEX HD CAPSCREW, 7/16-20X2-1/2, GR5, (included with seat belt)	
28	8303783	2	HEX HD CAPSCREW, M8X1.25X25mm, PC8.8	
29	8307203	2	PLAIN WASHER	

FIGURE 6-7. OPERATOR'S SEAT (644E SN 0160013127 to Present; 944E SN 0160013131 to Present)

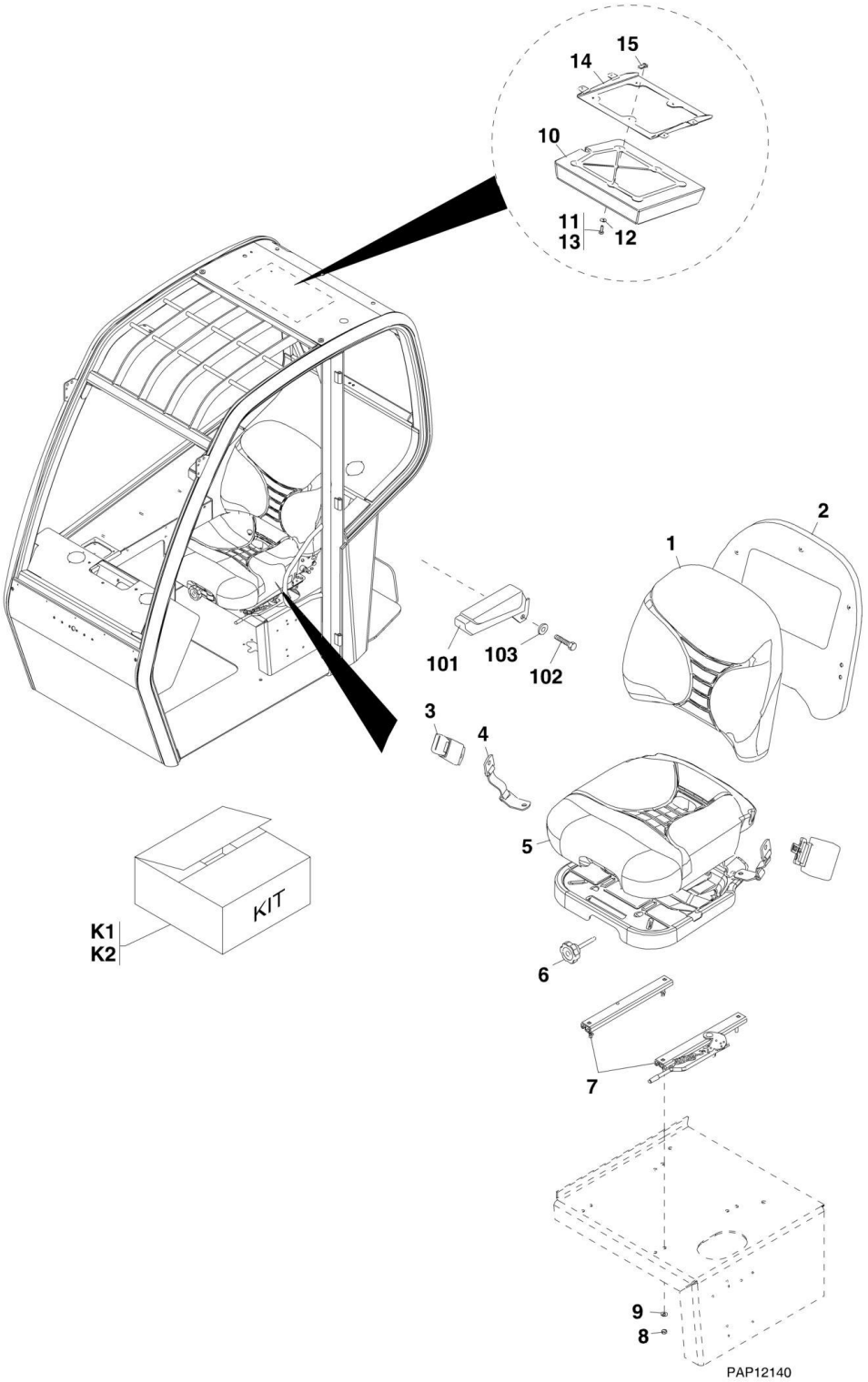

FIGURE 6-7. OPERATOR'S SEAT (644E SN 0160013127 to Present; 944E SN 0160013131 to Present)

ITEM	PART NUMBER	QTY	DESCRIPTION	REV
	3980039	1	SUSPENSION SEAT, (includes items 1 thru 7) **(644E SN 0160013127 through 0160034233; 944E SN 0160013131 through 0160034227)**	C
	1001101085	1	SUSPENSION SEAT, (includes items 1 thru 7) **(644E SN 0160034234 to Present; 944E SN 0160034228 to Present)**	D
1	7026900	1	BACK CUSHION KIT	
2	7026902	1	BACK PANEL KIT	
3	7026905	1	SEAT BELT KIT	
3	91563164	1	SEAT BELT, 3IN, (California Only), (not included with seat)	
4	7026906	1	TETHER KIT	
5	7026901	1	SEAT CUSHION KIT	
6	7026799	1	KNOB KIT	
7	7026798	1	SLIDE KIT	
8	8305626	4	HEX LOCKNUT, 5/16-18	
9	8307106	4	PLAIN WASHER, 5/16	
10	0860520	1	MANUAL STORAGE BOX	
11	0641406	4	HEX HD CAPSCREW, 1/4-20X3/4	
12	4751400	4	FLAT WASHER, 1/4	
13	0100011	1	LOCTITE 242	
14		Ref	MANUAL BOX MOUNT AND HARDWARE, (See CAB ASSEMBLY for Breakdown)	
15	8310702	4	NUT RETAINER, 1/4-20	
101	7138858	1	ARM REST	
102	8303783	2	HEX HD CAPSCREW, M8X25, GR8.8	
103	8307203	2	PLAIN WASHER, 5/16	
201	70023040	1	SHOCK ABSORBER KIT, (not shown), (includes one shock absorber, two shock pins and two hex nuts)	
202	70023041	1	SPRING AND SADDLE KIT, (not shown)	
203	70023890	1	BOOT KIT, (not shown)	
K1	2915056	1	SUSPENSION SEAT REPLACEMENT KIT, (includes seat p/n 3980039 and items 8 thru 15)	
K2	70023139	1	SEAT BELT KIT, 3IN, (includes female and retractor ends)	

FIGURE 6-8. REAR WINDOW (644E SN 17569 through 20123, SN 0160002514 through 0160009816; 944E SN 17569 through 20123, SN 0160002514 through 0160009818)

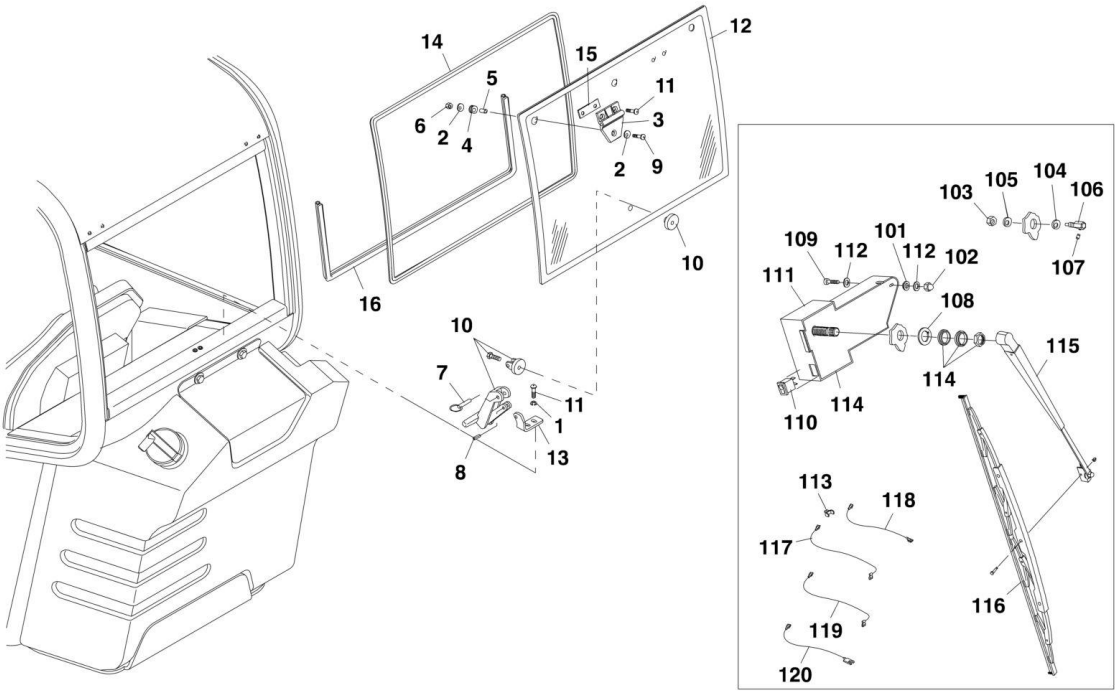

PAP12480

PU2380

FIGURE 6-8. REAR WINDOW (644E SN 17569 through 20123, SN 0160002514 through 0160009816; 944E SN 17569 through 20123, SN 0160002514 through 0160009818)

ITEM	PART NUMBER	QTY	DESCRIPTION	REV
	7301747	1	REAR WINDOW ASSY, (includes items 1 thru 16)	
1	8035416	2	LOCKWASHER, 1/4	
2	80264082	4	FLAT WASHER, 9/32 IDX1.05 OD	
3	8035475	2	PLASTIC HINGE	
4	8035477	2	RUBBER GROMMET	
5	8035478	2	PLASTIC BUSHING	
6	8035479	2	ACORN NUT, 1/4-20	
7	1001109417	1	DETENT RING PIN	
8	8035486	1	ROLL PIN, 3/16X1/2	
9	8310136	2	TRUSS SCREW, 1/4-20X1-1/4	
10	1001081280	1	WINDOW LATCH	
11	8036673	6	PAN HD BOLT, M6X1X25	
12	8036674	1	REAR WINDOW GLASS	
13	8036675	1	REAR WINDOW LATCH MOUNT	
14	8036676	1	REAR WINDOW BULB SEAL	
15	8036672	1	SPACER,HINGE, REAR WINDOW	
16	8036734	1	REAR WINDOW SEAL, SINGLE “D”	
	6623864	1	REAR WINDOW WIPER ASSY, (includes items 101 thru 120)	
101	8034803	1	RUBBER GROMMET, "T" STYLE	
102	8034805	1	ACORN NUT, #10-24	
103	8034798	1	HEX NUT, 5/16-18	
104	8034804	1	WEATHER TIGHT WASHER	
105	8034800	1	FLAT WASHER, BLACK NYLON	
106	8034801	1	NOZZLE HOLDER	
107	8554008	1	SPRAY NOZZLE	
108	8034808	1	NYLON SPACER	
109	8034811	1	PAN HD BOLT, #10-24X7/8	
110	8035509	1	ROCKER SPST SWITCH	
111	8035511	1	MOTOR COVER	
112	8036678	2	BLACK NYLON WASHER	
113	8036714	1	TERMINAL ADAPTER	
114	8035506	1	WIPER MOTOR	
115	8036716	1	WIPER ARM	
116	8036717	1	12IN WIPER BLADE	
117	8036729	1	REAR WIPER POWER JUMPER WIRE	
118	8036718	1	REAR WIPER POWER JUMPER WIRE	
119	8036719	1	REAR WIPER SWITCH JUMPER WIRE	
120	8036761	1	WIPER GROUND JUMPER WIRE	

FIGURE 6-9. REAR WINDOW (644E SN 0160009474 to Present; 944E SN 0160009839 to Present)

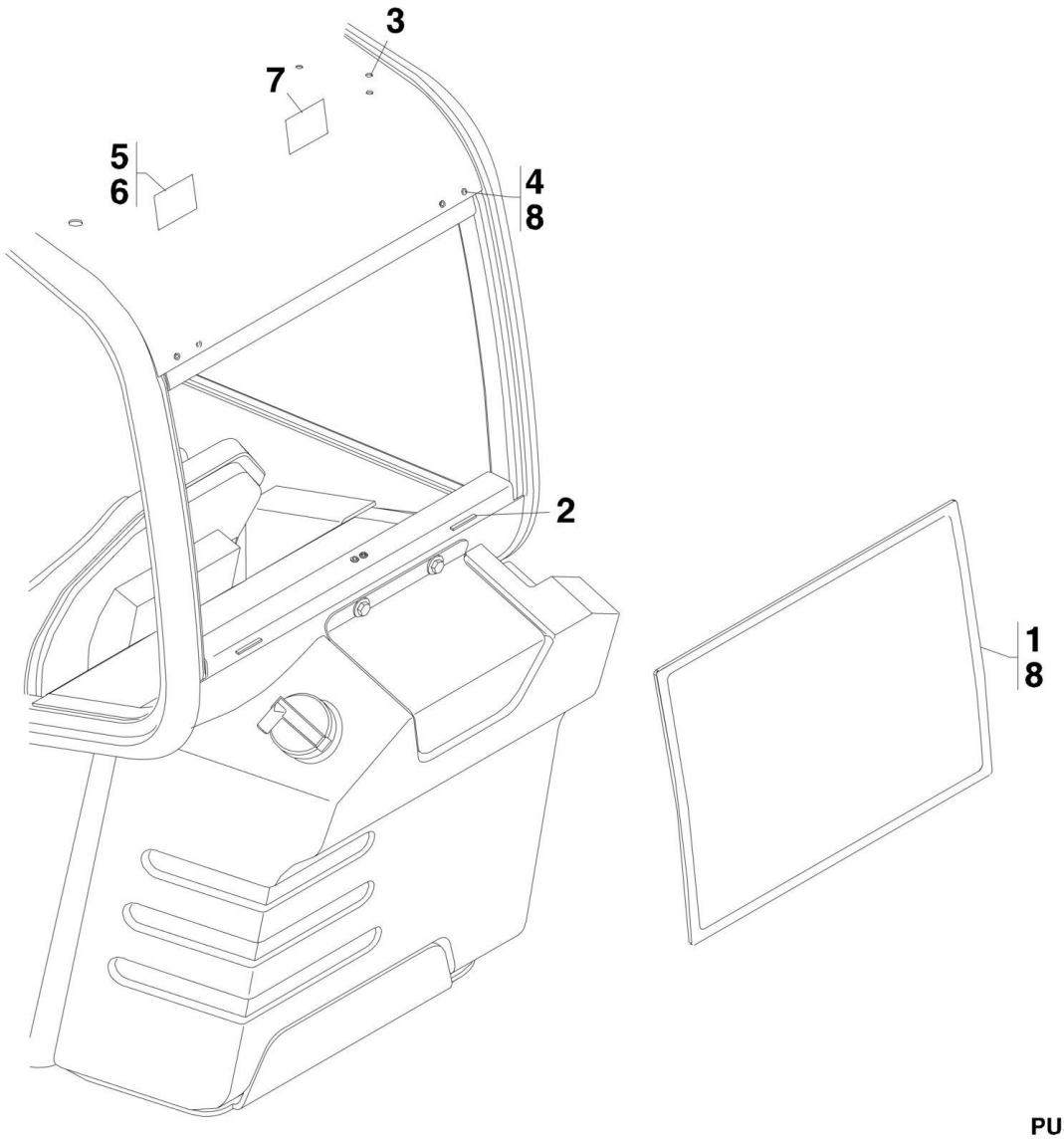

FIGURE 6-9. REAR WINDOW (644E SN 0160009474 to Present; 944E SN 0160009839 to Present)

ITEM	PART NUMBER	QTY	DESCRIPTION	REV
1	7028738	1	REAR WINDOW GLASS	
2	8035490	2	SETTING BLOCK	
3	8035640	3	PLUG, 3/8 DIA	
4	8036655	2	CAB PLUG	
5	91404298	3	RIVET	
6	91404301	1	HAMMER	
7		Ref	ESCAPE DECAL, (See DECALS SECTION for Breakdown)	
8	8035523	AR	BLACK URETHANE SEALANT, (apply to items 1 & 4)	

FIGURE 6-10. FRONT WINDSHIELD WIPER ASSEMBLY

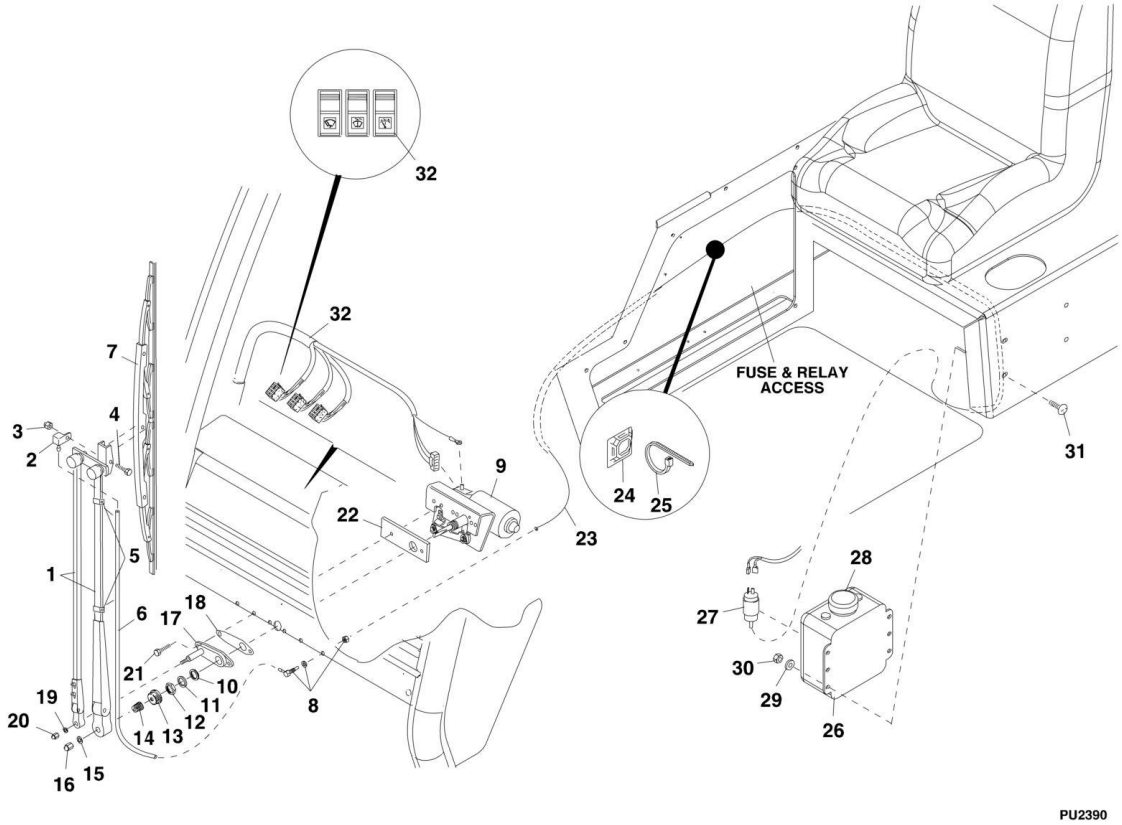

FIGURE 6-10. FRONT WINDSHIELD WIPER ASSEMBLY

ITEM	PART NUMBER	QTY	DESCRIPTION	REV
	8036668	1	FRONT WINDSHIELD WIPER ASSY, (includes items 1 thru 22)	
1	8035393	1	WIPER ARM, 24IN WET, (includes items 2 thru 6)	
2	N.S.S.	1	SPRAYER NOZZLE	
3	N.S.S.	1	LOCKNUT	
4	N.S.S.	1	BOLT	
5	N.S.S.	2	HOSE CLIPS	
6	N.S.S.	1	HOSE	
7	8035392	1	WIPER FLEX BLADE, 28IN	
8	1001081310	1	WET ARM ADAPTOR	
9	8036670	1	FRONT WIPER MOTOR ASSY, (includes items 10 thru 16)	
10	N.S.S.	1	CARDBOARD WASHER	
11	N.S.S.	1	METAL WASHER	
12	N.S.S.	1	HEX JAM NUT, 11/16-24	
13	N.S.S.	1	RUBBER CAP	
14	N.S.S.	1	KNURLED DRIVER	
15	N.S.S.	1	LOCKWASHER, 3/8, (internal tooth)	
16	N.S.S.	1	ACORN NUT, 1/4-28	
17	8034815	1	PANTO MOUNT PLATE ASSY, (includes items 18 thru 20)	
18	N.S.S.	1	PANTO GASKET	
19	N.S.S.	1	LOCKWASHER, 1/4, (internal tooth)	
20	N.S.S.	1	ACORN NUT, 1/4-28	
21	8036669	2	HEX HD CAPSCREW, 1/4-28X1	
22	1001081306	1	FRONT WIPER MOTOR SPACER	
23	8033075	1	RESERVOIR HOSE, 120IN	
24	8584018	AR	TIE WRAP MOUNT	
25	8584001	AR	TIE WRAP	
26	8035410	1	WASHER RESERVOIR ASSY WITH PUMPS, (includes items 27 & 28)	
27	N.S.S.	1	RESERVOIR PUMP	
28	N.S.S.	1	RESERVOIR CAP	
29	8036657	4	FLAT WASHER, .250, .562, .049	
30	8036662	4	HEX NUT, M6	
31	8036656	4	PHILLIPS PANHEAD BOLT, M6X16	
32		Ref	SWITCHES, (See ELECTRICAL SECTION for Breakdown)	

FIGURE 6-11. SKYLIGHT WIPER ASSEMBLY

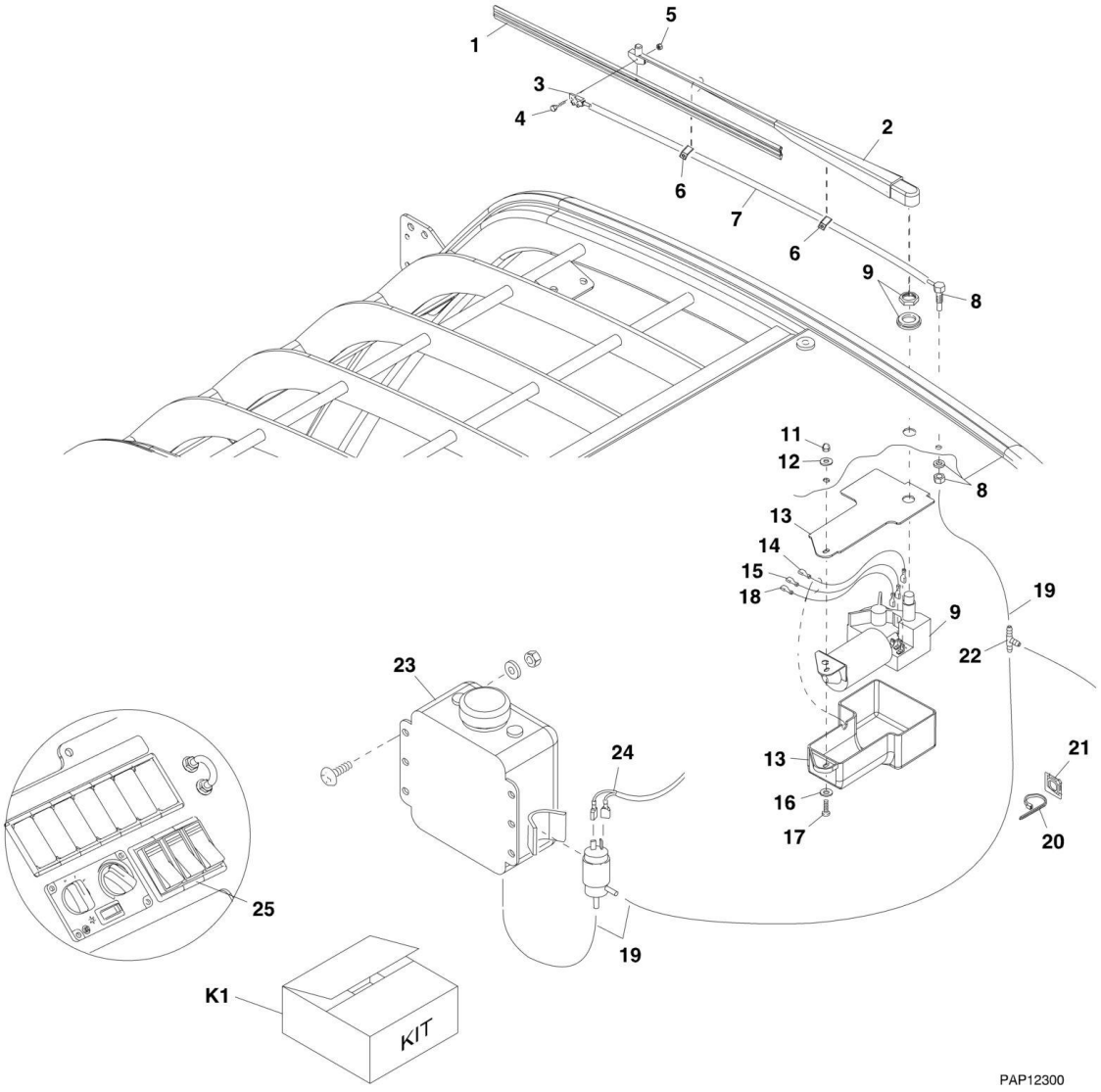

FIGURE 6-11. SKYLIGHT WIPER ASSEMBLY

ITEM	PART NUMBER	QTY	DESCRIPTION	REV
	8036677	1	SKYLIGHT WIPER ASSY, (includes items 1 thru 18)	AB
1	8035498	1	WIPER BLADE, 20IN FLEX	
2	8034807	1	WIPER ARM, 15 TO 19IN ADJUSTABLE	
3	Kit K1	1	SPRAYER NOZZLE	
4	Kit K1	1	BOLT	
5	Kit K1	1	LOCKNUT	
6	Kit K1	2	HOSE CLIPS	
7	Kit K1	1	HOSE	
8	1001081310	1	WET ARM ADAPTOR	
9	8036680	1	SKYLIGHT WIPER MOTOR ASSY	
11	8034805	1	ACORN NUT, #10-24	
12	8036679	1	WASHER	
13	8035493	1	MOTOR ASSY COVER	
14	8036681	1	SKYLIGHT PARK JUMPER WIRE	
15	8036682	1	SKYLIGHT RUN JUMPER WIRE	
16	8036678	1	FLAT WASHER, BLACK NYLON	
17	8036088	1	PAN HEAD SCREW, #10-24X3/4	
18	8036761	1	JUMPER WIRE,WIPER GROUND	
19	8033075	1	WASHER HOSE, 120IN	
20	8584001	AR	TIE WRAP	
21	8584018	AR	TIE WRAP MOUNT	
22	8036072	1	TEE CONNECTOR, (if equipped with rear window wiper)	
23		Ref	WASHER RESERVOIR, (See FRONT WINDSHIELD WIPER ASSEMBLY for Breakdown)	
24		Ref	CLOSED CAB HARNESS, (See ELECTRICAL SECTION for Breakdown)	
25		Ref	WIPER SWITCHES, (See ELECTRICAL SECTION for Breakdown)	
K1	8035499	1	WET KIT, (includes items 3 thru 7)	

FIGURE 6-12. WINDSHIELD GUARD

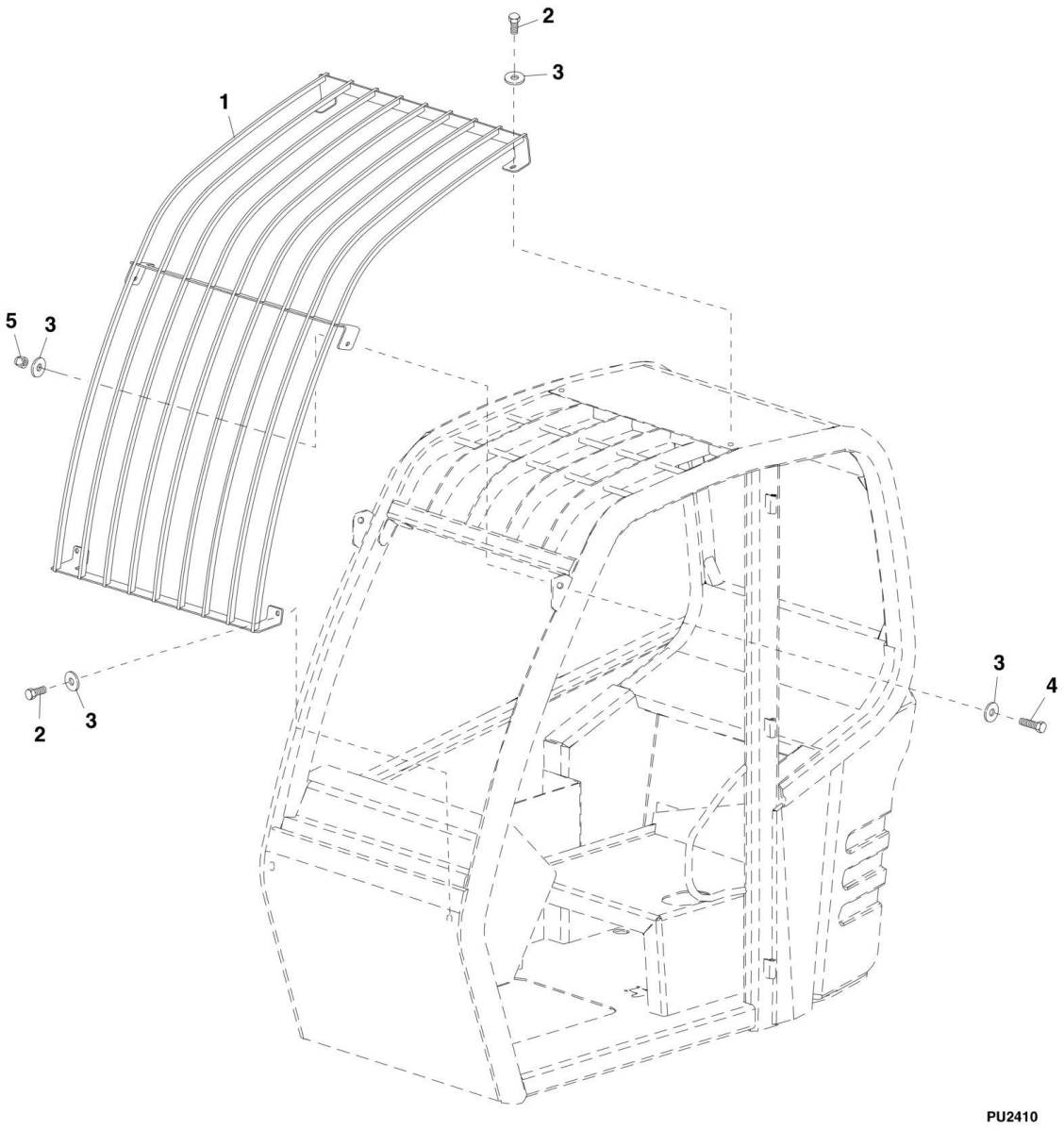

FIGURE 6-12. WINDSHIELD GUARD

ITEM	PART NUMBER	QTY	DESCRIPTION	REV
1	7301326	1	WINDSHIELD GUARD	
2	8303681	4	HEX HD CAPSCREW, 3/8-16X3/4, GR5	
3	8307110	8	WASHER, 3/8	
4	8303675	2	HEX HD CAPSCREW, 3/8-16X1-1/4, GR5	
5	8305645	2	LOCKNUT, 3/8-16	

FIGURE 6-13. MIRRORS

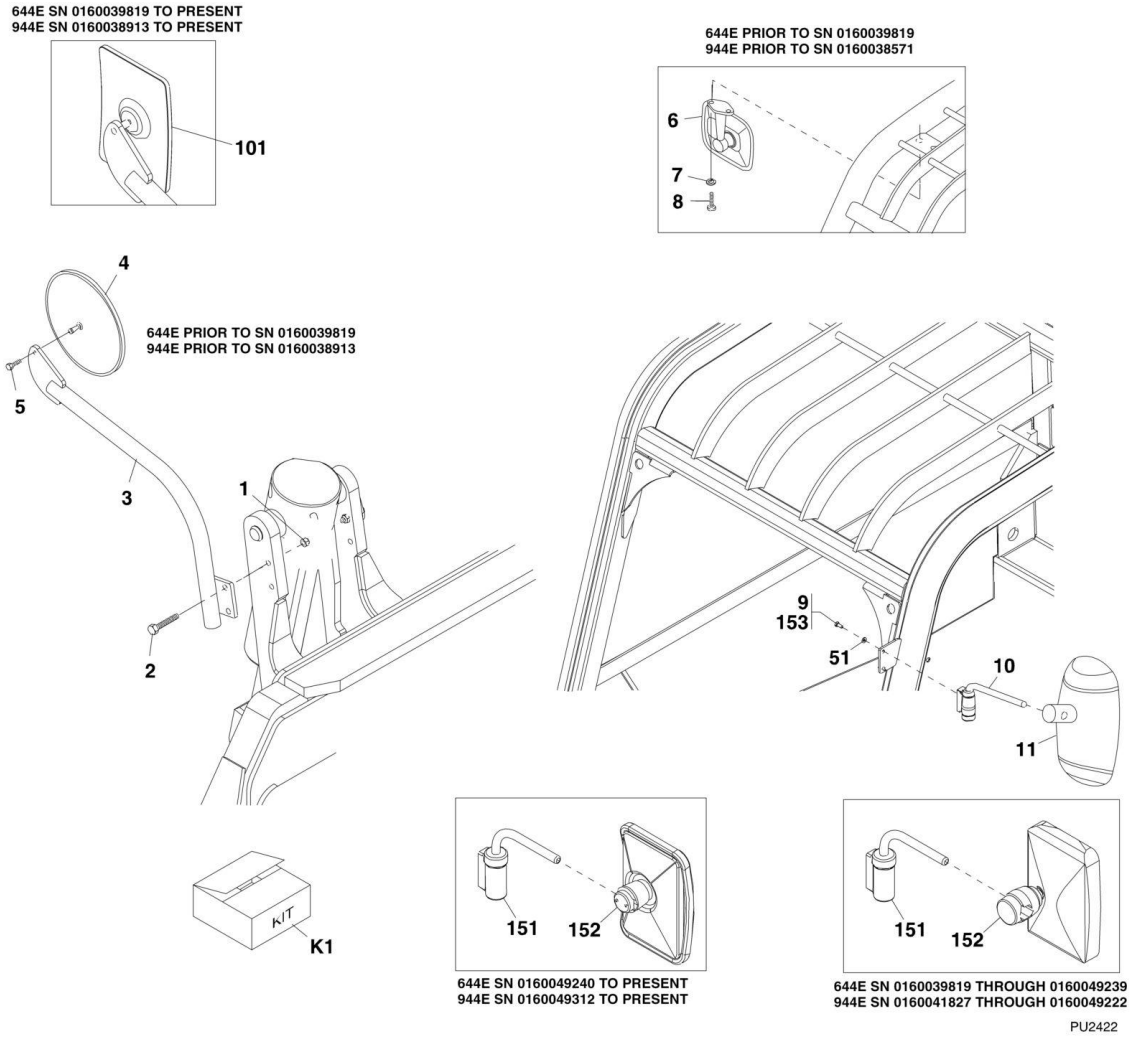

FIGURE 6-13. MIRRORS

ITEM	PART NUMBER	QTY	DESCRIPTION	REV
1	8310625	2	HEX LOCKNUT, M12X1.75	
2	8310218	2	HEX HD CAPSCREW, M12X55, GR8.8, (torque to 50-90 Nm/50-66 lb-ft)	
3	7301171	1	MIRROR BRACKET	
4	8866625	1	10IN CONVEX MIRROR, (includes item 5) **(644E Prior to SN 0160039819; 944E Prior to SN 0160038913)**	
5	N.S.S.	1	HEX HD CAPSCREW, 5/16-18	
6	8866516	1	REAR VIEW MIRROR, 7X5.63 **(644E Prior to SN 0160039819; 944E Prior to SN 0160038571)**	
7	8310390	2	PLAIN WASHER, 5mm **(644E Prior to SN 0160039819; 944E Prior to SN 0160038571)**	
8	8310690	2	SLOTTED PANHEAD SCREW, M5X20 **(644E Prior to SN 0160039819; 944E Prior to SN 0160038571)**	
9	8303799	2	HEX HD CAPSCREW, M6X14, GR8.8 **(644E Prior to SN 0160039819; 944E Prior to SN 0160041827)**	
10	8866530	1	MIRROR ARM ASSY **(644E Prior to SN 0160039819; 944E Prior to SN 0160041827)**	
11	8866514	1	CONVEX MIRROR, 11X6.85 **(644E Prior to SN 0160039819; 944E Prior to SN 0160041827)**	
51	8307024	2	LOCKWASHER, 6mm	
101	8866348	1	RECTANGULAR MIRROR ASSY, (includes item 102) **(644E SN 0160039819 to Present; 944E SN 0160038913 to Present)**	
102	N.S.S.	1	HEX HD CAPSCREW, 5/16-18, (torque to 8-13 lb-ft), (not shown)	
151	1001114675	1	MIRROR ARM ASSY **(644E SN 0160039819 to Present; 944E SN 0160041827 to Present)**	
152	3140007	1	RECTANGULAR MIRROR **(644E SN 0160039819 through 0160049239; 944E SN 0160041827 through 0160049222)**	
152	1001148177	1	MIRROR **(644E SN 0160049240 to Present; 944E SN 0160049312 to Present)**	
153	0700610	2	HEX HD CAPSCREW, M6X20, GR8.8 **(644E SN 0160039819 to Present; 944E SN 0160041827 to Present)**	
K1	1001125007	1	MIRROR ARM KIT, (includes items 151 & 153)	C

FIGURE 6-14. HEATER SYSTEM

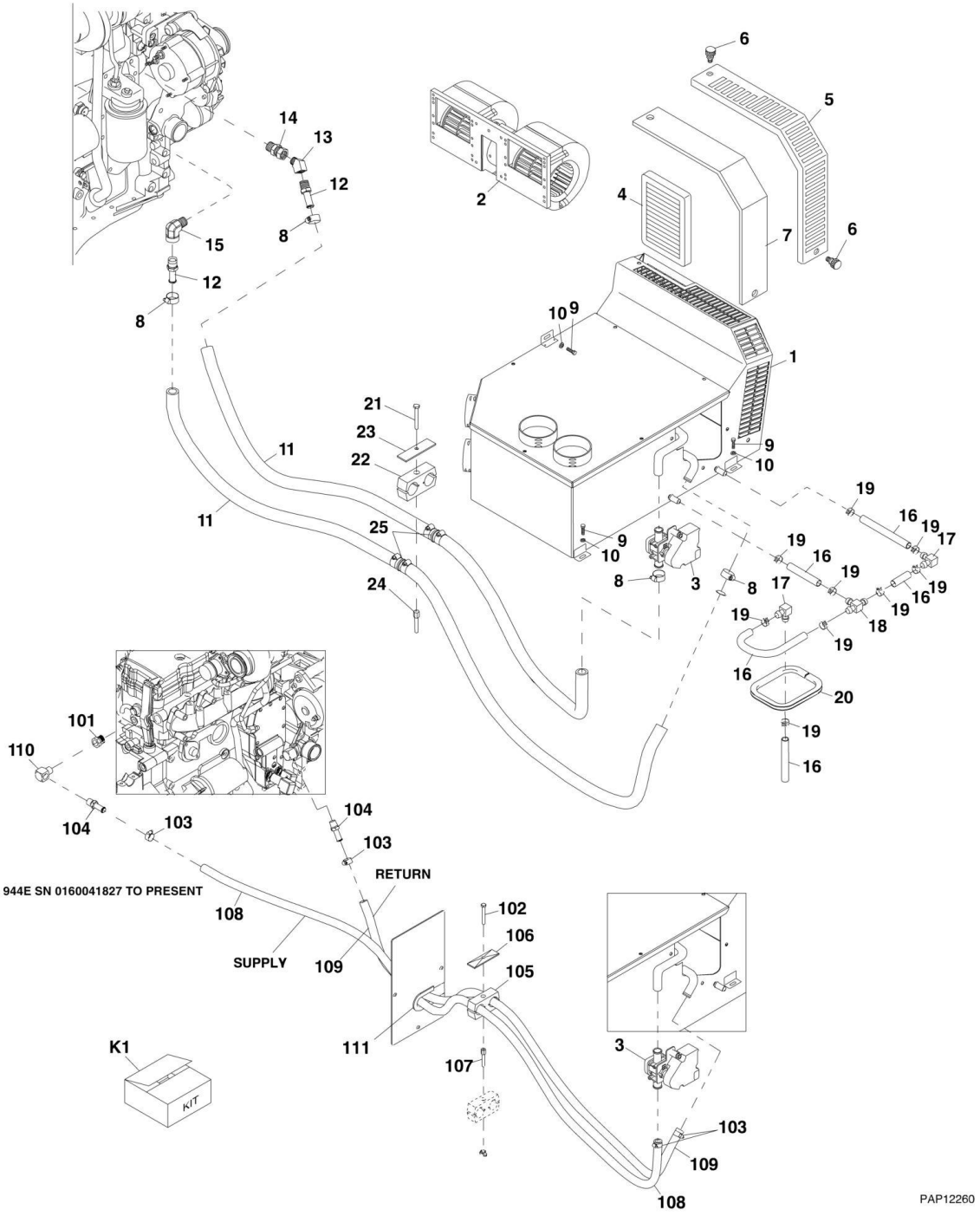

FIGURE 6-14. HEATER SYSTEM

ITEM	PART NUMBER	QTY	DESCRIPTION	REV
1	7301259	1	HEATER/BLOWER ASSY, (includes items 2 thru 7)	G
2	8036727	1	BLOWER MOTOR ASSY	
3	7301261	1	HEAT VALVE ASSY	
4	8036725	1	FRESH AIR INTAKE FILTER	
5	8036724	1	RECIRCULATION FILTER COVER	
6	8036726	2	THUMB SCREW	
7	8036723	1	FOAM FILTER	
8	8410009	8	HOSE CLAMP, 1.06 DIA, (torque to 2.7-4.0 lb-ft/3.6-5.4 Nm) **(Prior to SN 0160041827)**	
9	8303606	3	HEX HD CAPSCREW, M8X20, GR8.8, (torque to 12-23 lb-ft)	
10	8307222	3	PLAIN WASHER, 8mm	
11	7301434	NLA	HEATER ENGINE RETURN AND SUPPLY HOSE, (no longer available, use 1001110784 for replacement)	
11	1001110784	4	HEATER ENGINE RETURN AND SUPPLY HOSE	
12	8430048	2	HOSE BARB REDUCER, PIPE THREAD 10-8P **(Prior to SN 0160041827)**	
13	8540231	1	ELBOW, 45, **(Prior to SN 0160041827)**	
14	8540016	1	SWIVEL ADAPTER, 12-12P **(Prior to SN 0160041827)**	
15	8540218	1	ELBOW, 90, **(Prior to SN 0160041827)**	
16	7029412	AR	HOSE ASSY	
17	7029413	2	ELBOW DRAIN, 90	
18	7029414	1	DRAIN TEE, 1/2	
19	7029415	9	DRAIN HOSE CLAMP	
20	4060805	1.4 ft	FLEX TRIM	
21	8303528	1	HEX HD CAPSCREW, M8X65, GR8.8, (torque to 12-23 lb-ft/16.2-31.1 Nm)	
22	8750022	1	TWIN CLAMP SET	
23	8750025	1	TWIN COVER PLATE	
24	8750039	1	STACKING BOLT	
25	80683217	2	HOSE BARB STR 10-10	
	1001114941	Ref	HEATER HOSE INSTALLATION, (not available to order, see items 101 thru 111 for service) **(SN 0160041827 to Present)**	A
101	2220282	1	REDUCER FITTING	
102	8303528	1	HEX HD CAPSCREW, M8X65, GR8.8, (torque to 12-23 lb-ft)	
103	8410009	4	GEAR CLAMP, (torque to 40 lb-in)	
104	8430048	2	REDUCER FITTING	
105	8750022	1	TWIN CLAMP SET	
106	8750025	1	TWIN COVER PLATE	
107	8750039	1	STACKING BOLT	
108	1001114942	1	HOSE, (supply)	
109	1001115174	1	HOSE, (return)	
110	1001117214	1	ADAPTER, 90	
111	90206196	7.5 in	PVC TRIM	
K1	2915028	1	DRAIN KIT, (includes items 16 thru 19)	

FIGURE 6-15. AIR CONDITIONING SYSTEM

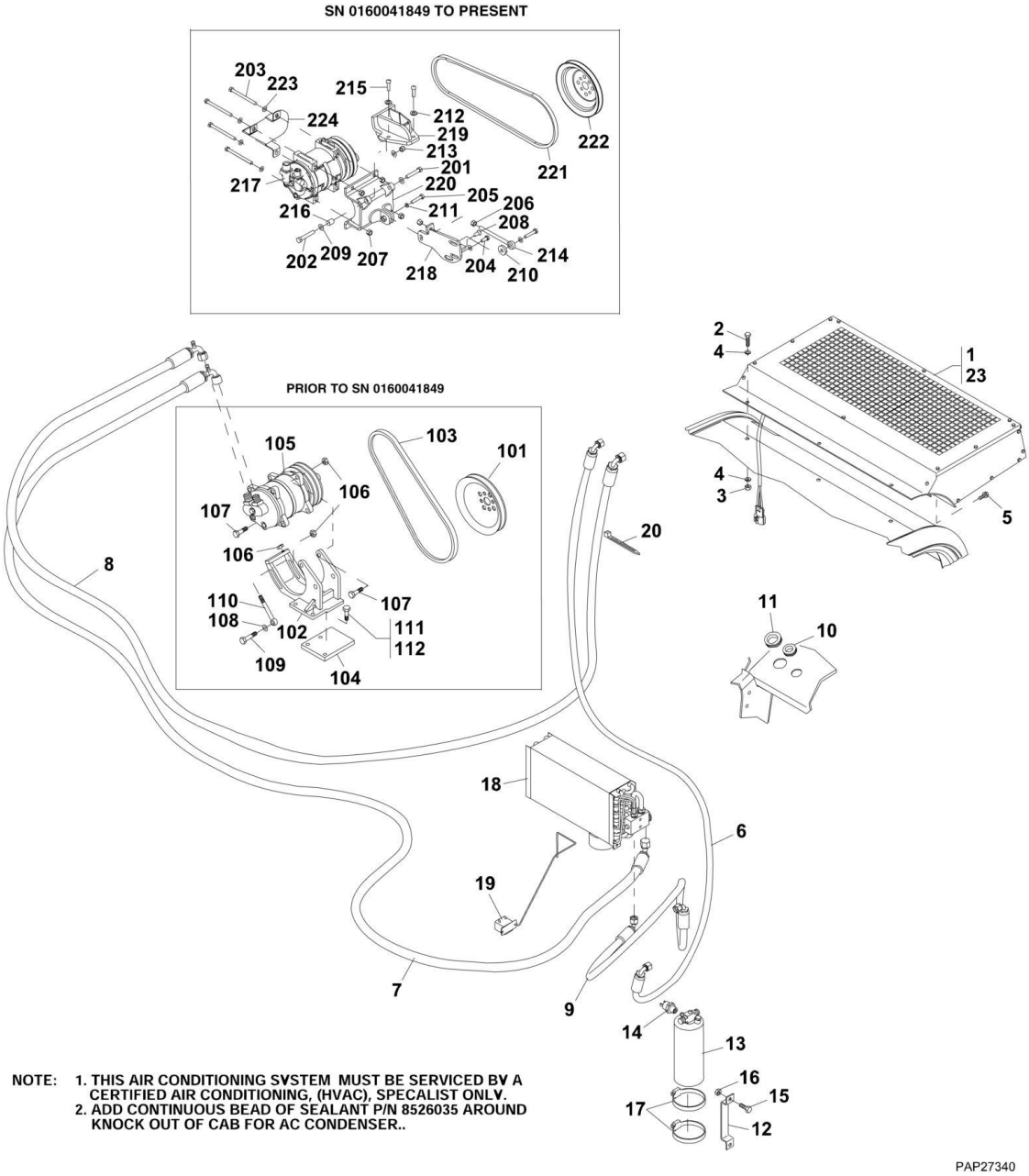

FIGURE 6-15. AIR CONDITIONING SYSTEM

ITEM	PART NUMBER	QTY	DESCRIPTION	REV
1	7301264	1	AIR CONDITIONER CONDENSER	
2	8303670	3	HEX HD CAPSCREW, 0.312-18X1.00, GR5	
3	8305626	3	HEX LOCKNUT, 0.312-18	
4	8307203	6	FLAT WASHER, 0.312	
5	8310683	2	WASHER HD SCREW, 0.312-18X.75 SELF DRILLING	
6	7301441	1	HOSE ASSEMBLY	
7	7301442	1	HOSE ASSEMBLY	
8	7301443	1	HOSE ASSEMBLY	
9	7301444	1	HOSE ASSEMBLY	
10	8660016	1	RUBBER GROMMET	
11	8660017	1	RUBBER GROMMET	
12	7138478	1	AIR CONDITIONER DRIER BRACKET	
13	7138483	1	AIR CONDITIONER DRIER RECEIVER	
14	8223531	1	AIR CONDITIONER PRESSURE SWITCH	
15	8303544	2	HEX HD CAPSCREW, M6X20, GR8.8	
16	8305047	2	HEX NUT, M6X1	
17	8405203	2	GEAR CLAMP, 3IN DIA	
18	7301262	1	EVAPORATOR COIL	
19	7301302	1	THERMOSTAT	
20	8584001	3	TIE WRAP	
21	2300037	2.5 lbs	FLUID REFRIGERANT, R-134a, (not shown)	
22	8220888	1	3-WAY SHROUD CONNECTOR, (not shown)	
23	8526035	1	ADHESIVE	
	7301813	1	AC COMPRESSOR INSTALLATION, (not available to order, see items 101 thru 112 for service) **(Prior to SN 0160041849)**	E
101	7138361	1	ACCESSORY DRIVE SHEAVE	
102	7301783	1	COMPRESSOR MOUNT BRACKET	
103	7301815	1	COMPRESSOR V BELT	
104	7301881	1	SPACER	
105	8276019	1	AC COMPRESSOR, 12V	
106	8305630	5	HEX LOCKNUT, M10X1.5	
107	8310534	3	HEX HD CAPSCREW, M10X40, GR10.9	
108	8307221	5	FLAT WASHER, 10mm	
109	8310736	1	HEX HD CAPSCREW, M10X50, GR10.9	
110	8310737	1	MALE ROD END, M10X100	
111	0711017	3	HEX HD CAPSCREW, M10X45, GR10.9	
112	0100011	AR	LOCTITE 242	
	1001142508	1	AC COMPRESSOR INSTALLATION, (not available to order, see items 201 thru 224 for service) **(SN 0160041849 to Present)**	
201	0681616	1	HEX HD CAPSCREW, 3/8-16X2	
202	0681618	1	HEX HD CAPSCREW, 3/8-16X2-1/4	
203	0710827	4	HEX HD CAPSCREW, M8X100	
204	0770810	1	HEX HD CAPSCREW, M8X20	
205	0770816	2	HEX HD CAPSCREW, M8X40	
206	3271601	2	HEX NUT, 3/-16	
207	3290805	4	HEX LOCK NUT, M8X1.25	
208	3900382	1	FLAT SOCKET HEAD SCREW	
209	4711600	4	WASHER, 3/8	
210	4740275	1	WASHER	
211	4811900	7	WASHER, 8MM	

ITEM	PART NUMBER	QTY	DESCRIPTION	REV
212	4832000	3	LOCKWASHER, 10mm	
213	8305645	2	NUT	
214	88681311	1	ROD END	
215	91513234	3	SOCKET CAP SCREW, M10X1.5X30mm	
216	1001131818	1	SLEEVE	
217	1001136877	1	AC COMPRESSOR CLUTCH	
218	1001143475	1	AC COMPRESSOR SUPPORT	
219	1001143521	1	AC COMPRESSOR SUPPORT	
220	1001143522	1	AC COMPRESSOR SUPPORT	
221	1001146644	1	AC COMPRESSOR DRIVE BELT	
222	7138361	1	SHEAVE	
223	8310053	4	PLAIN WASHER, 3/2	
224	1001155287	1	AC BELT SHIELD	

FIGURE 6-16. VENTILATION HOSES AND VENTS

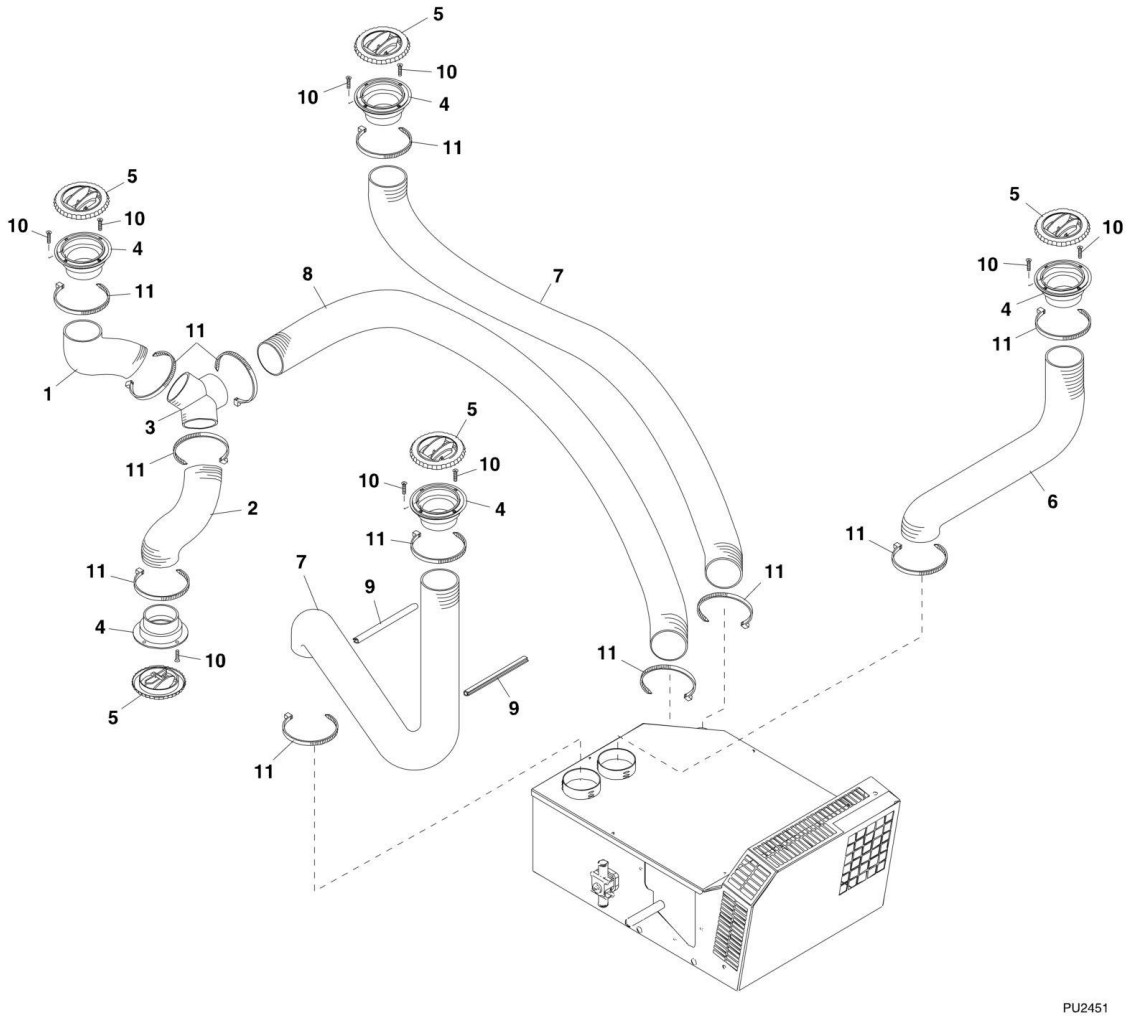

FIGURE 6-16. VENTILATION HOSES AND VENTS

ITEM	PART NUMBER	QTY	DESCRIPTION	REV
	7301273	Ref	VENTILATION HOSES AND VENTS INSTALLATION, (not available to order, see items 1 thru 11 for service)	AC
1	7301457	1	AIR DUCT HOSE ASSY	
2	7301458	1	AIR DUCT HOSE ASSY	
3	7301476	1	T-SPLICE ADAPTER	
4	7301478	5	HOSE ADAPTER	
5	7301479	5	ROTATING/CLOSING LOUVER	
6	7301657	1	AIR DUCT HOSE ASSY	
7	7301658	2	AIR DUCT HOSE ASSY	
8	7301659	1	AIR DUCT HOSE ASSY	
9	7301660	2	EDGE MOULDING	
10	8310726	10	SELF TAPPING SCREW, OVAL COUNTERSUNK	
11	10720496	12	TIE WRAP	

SECTION 7 - CONTROLS

FIGURE 7-1. SERVICE BRAKE AND PEDAL ASSEMBLY

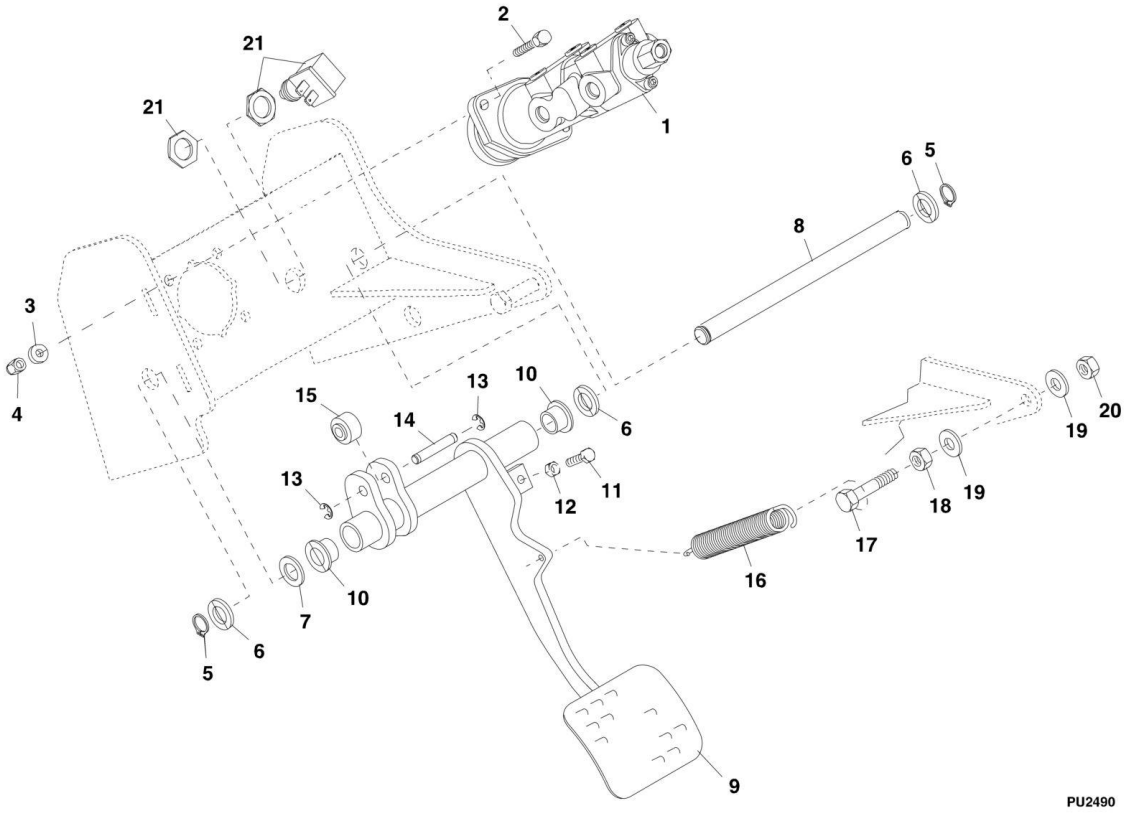

FIGURE 7-1. SERVICE BRAKE AND PEDAL ASSEMBLY

ITEM	PART NUMBER	QTY	DESCRIPTION	REV
1	8902316	1	BRAKE VALVE **(644E Prior to SN 0160039830, Excluding 0160036724, 0160036811, 0160036907 and 0160037012; 944E Prior to SN 0160040124, Excluding 0160034634, 40160036710, 0160036722, 0160036735 and 0160036738)**	
1	1001103493	1	BRAKE VALVE **(644E SN 0160039830 to Present, Excluding 0160036724, 0160036811, 40160036907 and 0160037012; 944E SN 0160040124 to Present, Excluding 0160034634, 0160036710, 0160036722, 0160036735 and 0160036738)**	
2	8310476	2	HEX HD CAPSCREW, M8X35, GR 8.8	
3	8307222	2	PLAIN WASHER, M8	
4	8305638	2	HEX LOCKNUT, M8X1.25	
5	8630020	2	SNAP RING, .75 INTERNAL HEAVY DUTY	
6	8310508	3	SHIM WASHER, .755X.075X1.25	
7	8310507	1	SHIM WASHER, .755X.048X1.25	
8	7139108	1	BRAKE PEDAL SHAFT	
9	7301066	1	BRAKE PEDAL ASSY, (includes items 10 thru 15)	AA
10	7300143	2	OILITE FLANGE BUSHING	
11	8303739	1	HEX HD CAPSCREW, 5/16-18X1-1/4, GR 5	
12	8310453	1	HEX NUT, 5/16-18, GR 5	
13	7300135	2	PIN CLIP	
14	7300136	1	SHAFT PIN	
15	7300137	1	ROLLER, 1 DIA	
16	8700125	1	EXTENSION SPRING, 1.00ODX7.12 LG	
17	8303261	1	HEX HD CAPSCREW, M12X100, GR 8.8	
18	8305044	1	HEX NUT, M12	
19	8307220	2	PLAIN WASHER, M12-1.75	
20	8310625	1	HEX LOCKNUT, M12-1.75	
21	8223238	1	STABIL-TRAK SWITCH	

FIGURE 7-2. THROTTLE GROUP INSTALLATION 644E (SN 17569 through 20115, SN 0160002519 through 0160003672, Excluding 19557 and 0160003489)

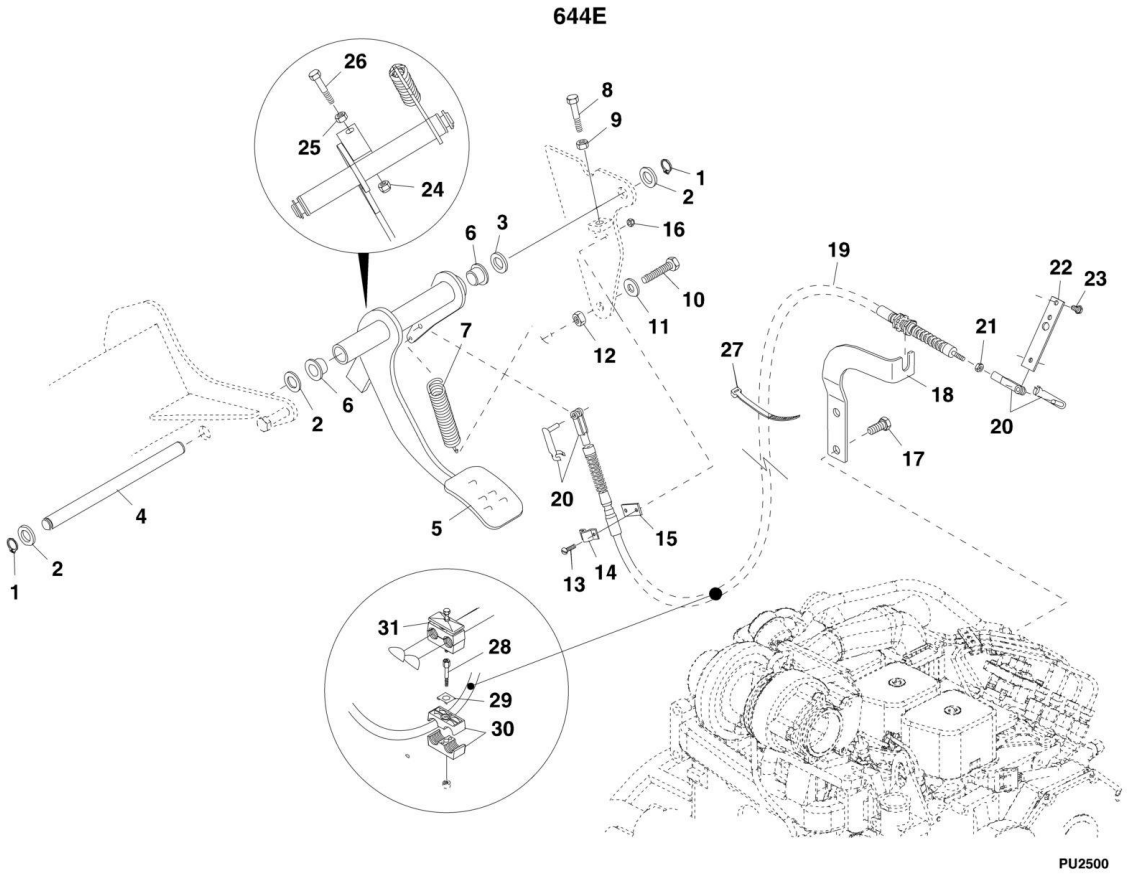

FIGURE 7-2. THROTTLE GROUP INSTALLATION 644E (SN 17569 through 20115, SN 0160002519 through 0160003672, Excluding 19557 and 0160003489)

ITEM	PART NUMBER	QTY	DESCRIPTION	REV
1	8630020	2	SNAP RING, 0.75 INTERNAL HEAVY DUTY	
2	8310508	3	SHIM WASHER, .755X.075X1.25	
3	8310507	1	SHIM WASHER, .755X.048X1.25	
4	7139108	1	THROTTLE PEDAL SHAFT	
5	7151285	1	ACCELERATOR PEDAL, (includes item 6)	AB
6	7300143	2	OILITE FLANGE BUSHING	
7	8700126	1	EXTENSION SPRING, 1.00 ODX7.23 LG	
8	8310716	1	HEX HD CAPSCREW, M8X55, GR8.8	
9	8305043	1	HEX NUT, M8-1.25	
10	8303624	1	HEX HD CAPSCREW, 1/2-13X1, GR5	
11	8307112	1	PLAIN WASHER, 1/2	
12	8310746	1	COUPLING NUT, 1/2-13X1.25	
13	8303837	2	PAN HEAD SCREW, #10-24X3/4	
14	10114383	1	CABLE CLAMP	
15	10116401	1	SHIM, CABLE CLAMP SPACER	
16	8310085	2	HEX LOCKNUT, #10-24	
17	8303790	2	HEX HD CAPSCREW, M12X30, GR8.8	
18	7300682	1	THROTTLE CABLE BRACKET	
19	8160102	1	THROTTLE CABLE, (includes 1 of item 20)	
20	10138818	2	YOKE END WITH SPRING PIN	
21	8305402	1	HEX JAM NUT,1/4	
22	7127091	1	THROTTLE LEVER EXTENSION	
23	8303799	2	HEX HD CAPSCREW, M6X14, GR8.8	
24	8305630	1	HEX LOCKNUT, M10-1.5	
25	8305038	1	HEX NUT, M10-1.5	
26	8310715	1	HEX HD CAPSCREW, M10X55, GR8.8	
27	8584003	AR	TIE WRAP	
28	8750039	1	STACKING BOLT	
29	8750017	1	LOCKING PLATE	
30	8750024	1	CLAMP SET	
31		Ref	HOSE CLAMP, (See HYDRAULIC CIRCUITS SECTION for Breakdown)	

FIGURE 7-3. THROTTLE GROUP INSTALLATION 644E (SN 0160003690 through 0160043356, Including 19557, 20118 and 0160003489)

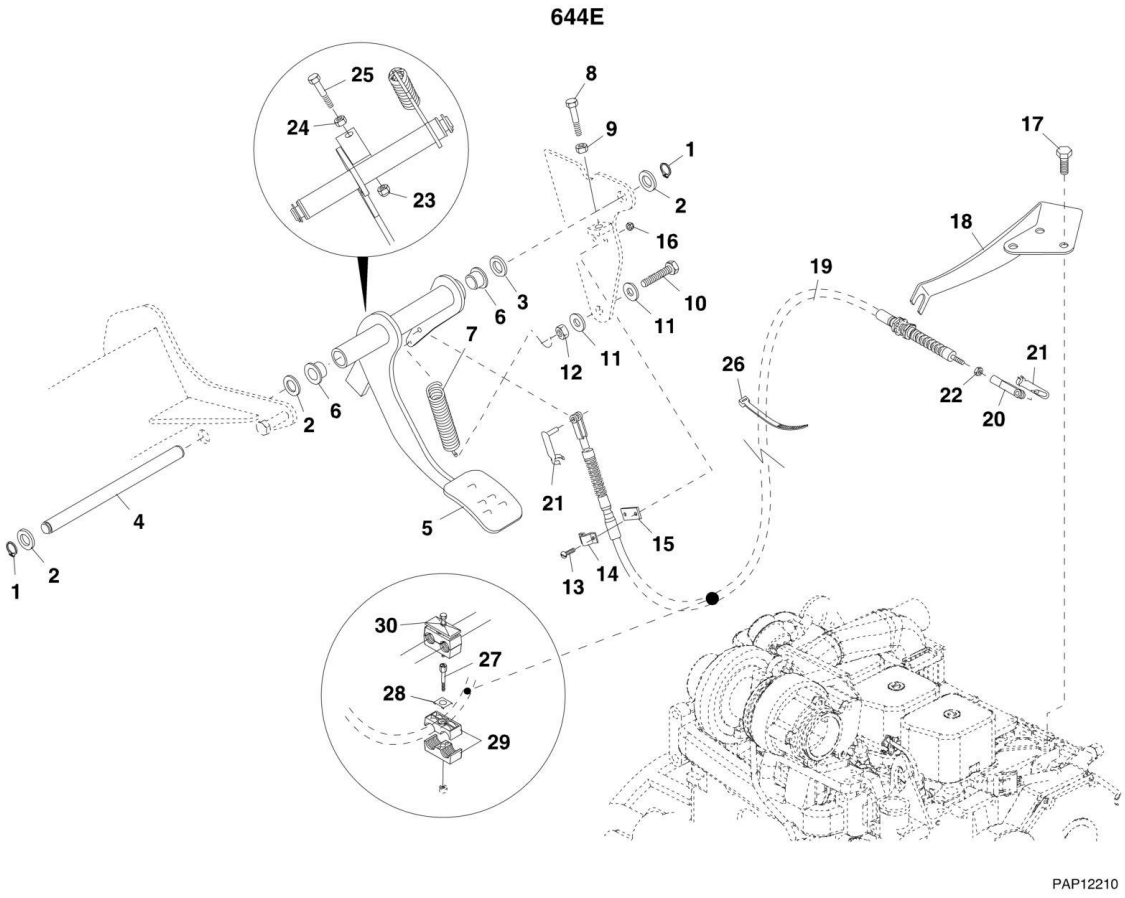

FIGURE 7-3. THROTTLE GROUP INSTALLATION 644E (SN 0160003690 through 0160043356, Including 19557, 20118 and 0160003489)

ITEM	PART NUMBER	QTY	DESCRIPTION	REV
1	8630020	2	SNAP RING, 0.75 INTERNAL HEAVY DUTY	
2	8310508	3	SHIM WASHER, 755X0.075X1.25	
3	8310507	1	SHIM WASHER, 755X0.048X1.25	
4	7139108	1	THROTTLE PEDAL SHAFT	
5	7151285	1	ACCELERATOR PEDAL, (includes item 6)	
6	7300143	2	OILITE FLANGE BUSHING	
7	8700126	1	EXTENSION SPRING, 1.00 ODX7.23 LG	
8	8310716	1	HEX HD CAPSCREW, M8X55, GR8.8	
9	8305043	1	HEX NUT, M8X1.25	
10	8303785	1	HEX HD CAPSCREW, M12X45, GR8.8	
11	8307220	2	PLAIN WASHER, 12mm	
12	8305044	1	HEX LOCKNUT, M12X1.75	
13	8303837	2	PAN HEAD SCREW, #10-24X3/4	
14	10114383	1	CABLE CLAMP	
15	10116401	1	SHIM, CABLE CLAMP SPACER	
16	8310085	2	HEX LOCKNUT, #10-24	
17	8310628	3	HEX HD CAPSCREW, M10X14, GR8.8	
18	7302331	Ref	THROTTLE CABLE BRACKET, (not available to order, use 1001127467 for replacement)	
18	1001127467	1	THROTTLE CABLE BRACKET	
19	8160103	1	THROTTLE CABLE, (includes 1 of item 20)	
20	10138818	2	YOKE END WITH SPRING PIN, (includes item 21)	
21	8310695	1	SPRING PIN	
22	8305402	1	HEX JAM NUT, 1/4	
23	8305630	1	HEX LOCKNUT, M10X1.5	
24	8305038	1	HEX NUT, M10X1.5	
25	8310715	1	HEX HD CAPSCREW, M10X55, GR8.8	
26	8584003	AR	TIE WRAP	
27	8750039	1	STACKING BOLT	
28	8750017	1	LOCKING PLATE	
29	8750024	1	CLAMP SET	
30		Ref	HOSE CLAMP, (See HYDRAULIC CIRCUITS SECTION for Breakdown)	

FIGURE 7-4. THROTTLE GROUP INSTALLATION 944E (SN 17569 through 20123, SN 0160002514 through 0160016057)

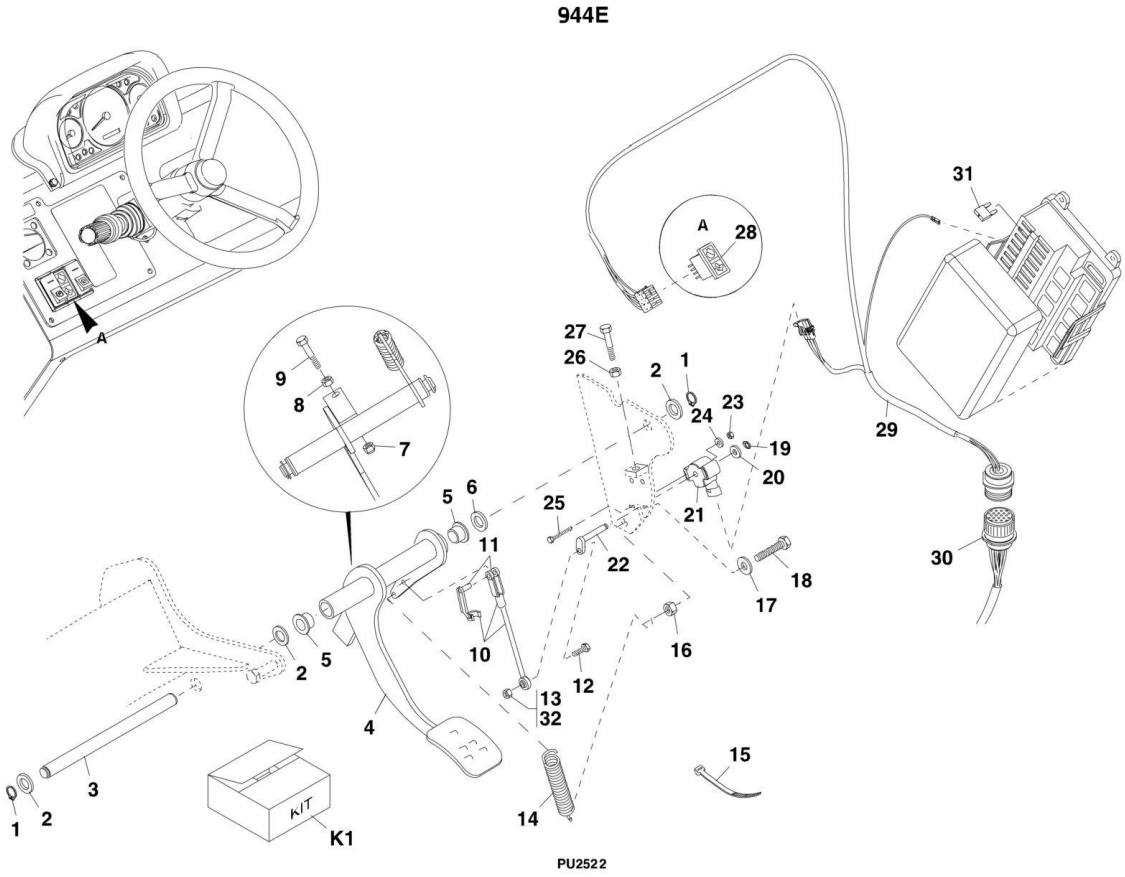

FIGURE 7-4. THROTTLE GROUP INSTALLATION 944E (SN 17569 through 20123, SN 0160002514 through 0160016057)

ITEM	PART NUMBER	QTY	DESCRIPTION	REV
		Ref	THROTTLE PEDAL ASSEMBLY, (no longer available, use Kit K1 for replacement or items 1 thru 9, 14, 16, 17, 18, 26 & 27 for service)	
1	8630020	2	HEAVY DUTY SNAP RING, 0.75 INTERNAL	
2	8310508	3	SHIM WASHER, 755X.075X1.25	
3	7139108	1	THROTTLE PEDAL SHAFT	
4	7151285	1	ACCELERATOR PEDAL, (includes item 5)	
5	7300143	2	OILITE FLANGE BUSHING	
6	8310507	1	SHIM WASHER, 0.755X.048X1.25	
7	8305630	1	HEX LOCKNUT, M10X1.5	
8	8305038	1	HEX NUT, M10X1.5	
9	8310715	1	HEX HD CAPSCREW, M10X55, GR8.8	
10	7301394	1	THROTTLE LINKAGE ASSY, (includes item 11)	
11	10138818	1	YOKE END WITH SPRING PIN	
12	8303005	1	HEX HD CAPSCREW, 0.25-20X.875, GR5	
13	8305624	1	HEX LOCKNUT, 0.25-20	
14	8700126	1	EXTENSION SPRING, 1.00 ODX7.23 LG	
15	8584003	AR	TIE WRAP	
16	8310746	1	COUPLING NUT, 1/2-13X1.25	
17	8307112	1	PLAIN WASHER, 12mm	
18	8303624	1	HEX HD CAPSCREW, 1/2-13X1, GR5	
19	8630027	1	EXTERNAL SNAP RING, 5/16	
20	8307202	1	PLAIN WASHER, 0.25	
21	7301392	1	THROTTLE SENSOR, ROTARY POSTION	
22	7301393	1	ROTARY POSITION SENSOR LEVER	
23	8310410	2	HEX LOCKNUT, #8-32	
24	8310732	2	PLAIN WIDE WASHER, 0.188	
25	8310728	2	HEX HD CAPSCREW, #8-32X1.5	
26	8305043	1	HEX NUT, M8X1.25	
27	8310716	1	HEX HD CAPSCREW, M8X55, GR8.8	
28	8223081	1	ECM SWITCH INDICATOR	
29	7301413	1	ECM CAB HARNESS	
30		Ref	ECM POWER HARNESS, (See ELECTRICAL SECTION for Breakdown)	
31		Ref	FUSE, (See ELECTRICAL SECTION for Breakdown)	
32	0100011	AR	LOCTITE 242, (apply to item 13)	
K1	2915158	1	THROTTLE PEDAL FIELD KIT, (includes items 4341154, Throttle Pedal Assy and 4923349, Jumper Harness), (See THROTTLE GROUP INSTALLATION for Breakdown) **(SN 0160016083 to Present)**	

FIGURE 7-5. THROTTLE GROUP INSTALLATION 944E (SN 0160016083 through 0160041849, Excluding 0160041827)

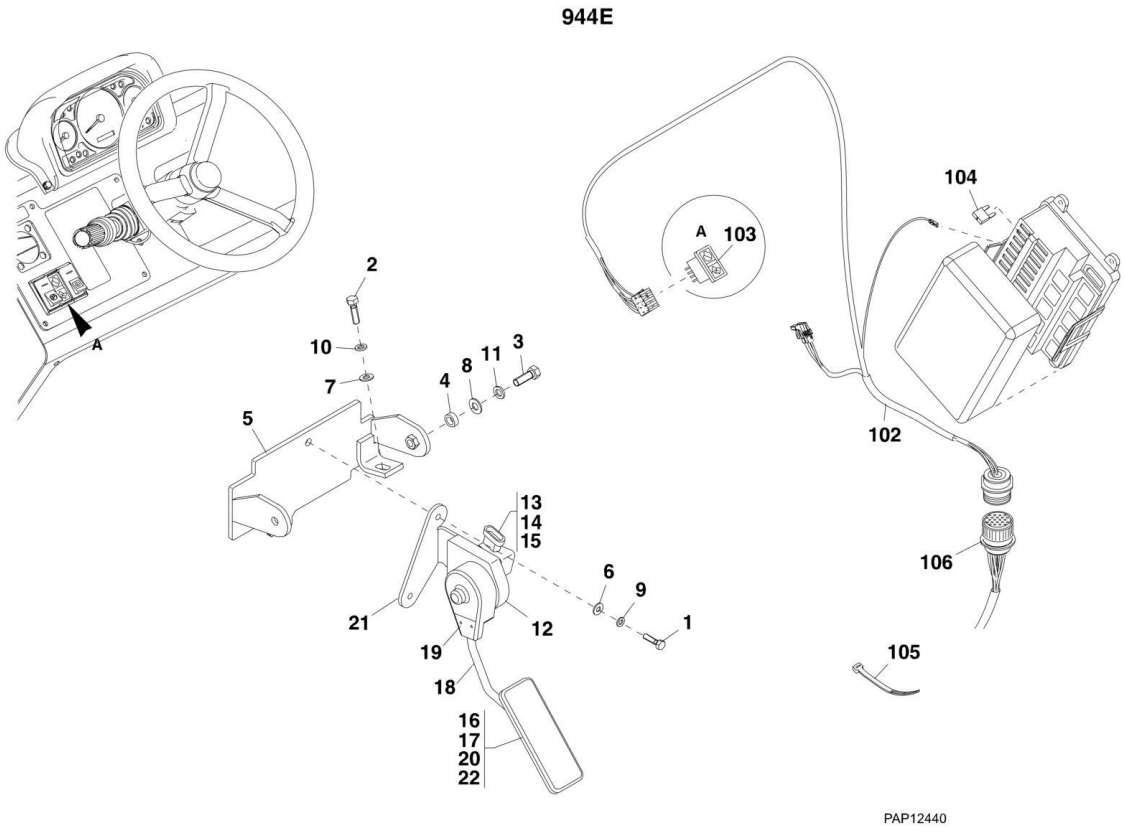

FIGURE 7-5. THROTTLE GROUP INSTALLATION 944E (SN 0160016083 through 0160041849, Excluding 0160041827)

ITEM	PART NUMBER	QTY	DESCRIPTION	REV
	4341154	Ref	THROTTLE PEDAL INSTALLATION, (not available to order, see items 1 thru 22 for service)	A
1	0541408	2	HEX HD CAPSCREW, 1/4-20X1	
2	0641509	1	HEX HD CAPSCREW, 5/16-18X1-1/8, GR5	
3	0641609	2	HEX HD CAPSCREW, 3/8-16X1-1/8, GR5	
4	3576286	2	SPACER	
5	4341156	1	WELDMENT	
6	4711400	2	WASHER, 1/4	
7	4711500	1	WASHER, 5/16	
8	4711600	2	WASHER, 3/8	
9	4761400	2	WASHER, 1/4	
10	4761500	1	WASHER, 5/16	
11	4761600	2	WASHER, 3/8	
12	80383410	1	ELECTRIC THROTTLE PEDAL, (includes items 13 thru 22)	
13	70020551	1	SENSOR KIT	
14	N.S.S.	2	SCREW	
15	N.S.S.	1	SENSOR	
16	70023325	1	PEDAL KIT, (includes items 17 thru 22)	
17	N.S.S.	1	SPRING	
18	7026481	1	PEDAL ARM	
19	N.S.S.	1	CLAMP	
20	N.S.S.	1	PEDAL PIN	
21	N.S.S.	1	BRACKET	
22	N.S.S.	2	SCREW	
	7301446	Ref	CAB ELECTRICAL INSTALLATION, (not available to order, see items 102 thru 105 for service)	E
102	4923344	1	ECM CAB HARNESS **(Prior to SN 0160036242)**	
102	1001103216	1	ECM CAB HARNESS **(SN 0160036242 through 0160041849, Excluding 0160041827)**	
103	8223081	1	ECM INDICATOR	
104		Ref	FUSE, 3 AMP, (See ELECTRICAL SECTION for Breakdown)	
105	8584001	6	TIE WRAP	
106		Ref	ECM POWER HARNESS, (See ELECTRICAL SECTION for Breakdown) **(944E Prior to SN 0160041827)**	

FIGURE 7-6. THROTTLE GROUP INSTALLATION (644E SN 0160048717 to Present, Including 0160045421; 944E SN 0160041827 to Present, Excluding 0160041849)

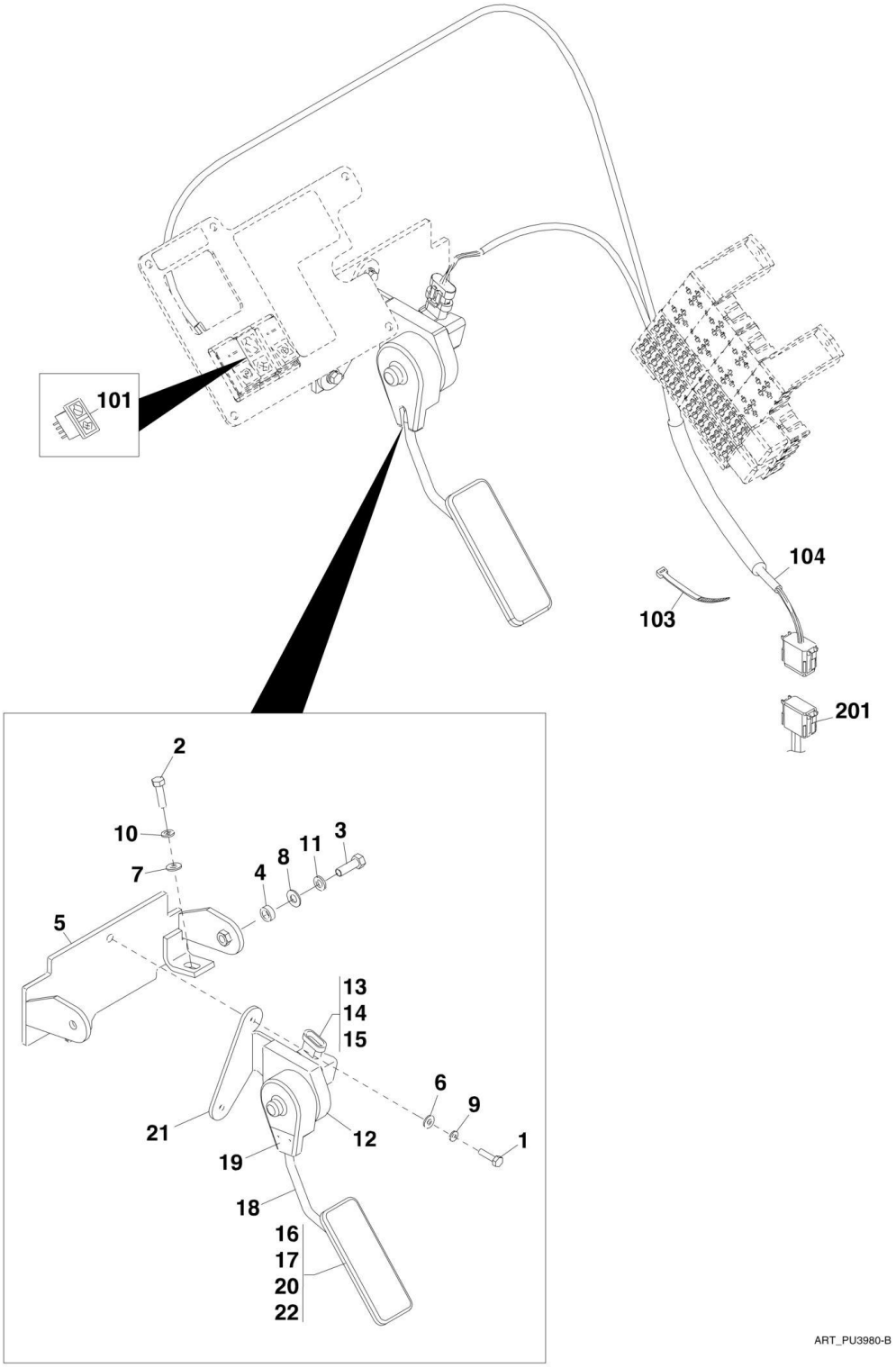

FIGURE 7-6. THROTTLE GROUP INSTALLATION (644E SN 0160048717 to Present, Including 0160045421; 944E SN 0160041827 to Present, Excluding 0160041849)

ITEM	PART NUMBER	QTY	DESCRIPTION	REV
	4341154	Ref	THROTTLE PEDAL INSTALLATION, (not available to order, see items 1 thru 22 for service)	A
1	0541408	2	HEX HD CAPSCREW, 1/4-20X1	
2	0641509	1	HEX HD CAPSCREW, 5/16-18X1-1/8, GR5	
3	0641609	2	HEX HD CAPSCREW, 3/8-16X1-1/8, GR5	
4	3576286	2	SPACER	
5	4341156	1	WELDMENT	
6	4711400	2	WASHER, 1/4	
7	4711500	1	WASHER, 5/16	
8	4711600	2	WASHER, 3/8	
9	4761400	2	WASHER, 1/4	
10	4761500	1	WASHER, 5/16	
11	4761600	2	WASHER, 3/8	
12	80383410	1	ELECTRIC THROTTLE PEDAL, (includes items 13 thru 22)	
13	70020551	1	SENSOR KIT	
14	N.S.S.	2	SCREW	
15	N.S.S.	1	SENSOR	
16	70023325	1	PEDAL KIT, (includes items 17 thru 22)	
17	N.S.S.	1	SPRING	
18	7026481	1	PEDAL ARM	
19	N.S.S.	1	CLAMP	
20	N.S.S.	1	PEDAL PIN	
21	N.S.S.	1	BRACKET	
22	N.S.S.	2	SCREW	
	1001120703	Ref	CAB ELECTRICAL INSTALLATION, (not available to order, see items 101 thru 104 for service)	C
101	8223081	1	ECM INDICATOR	
103	8584001	6	TIE WRAP	
104		Ref	ECM CAB HARNESS, (See ELECTRICAL SECTION for Breakdown)	
201		Ref	ECM POWER HARNESS	

FIGURE 7-7. STEERING COLUMN

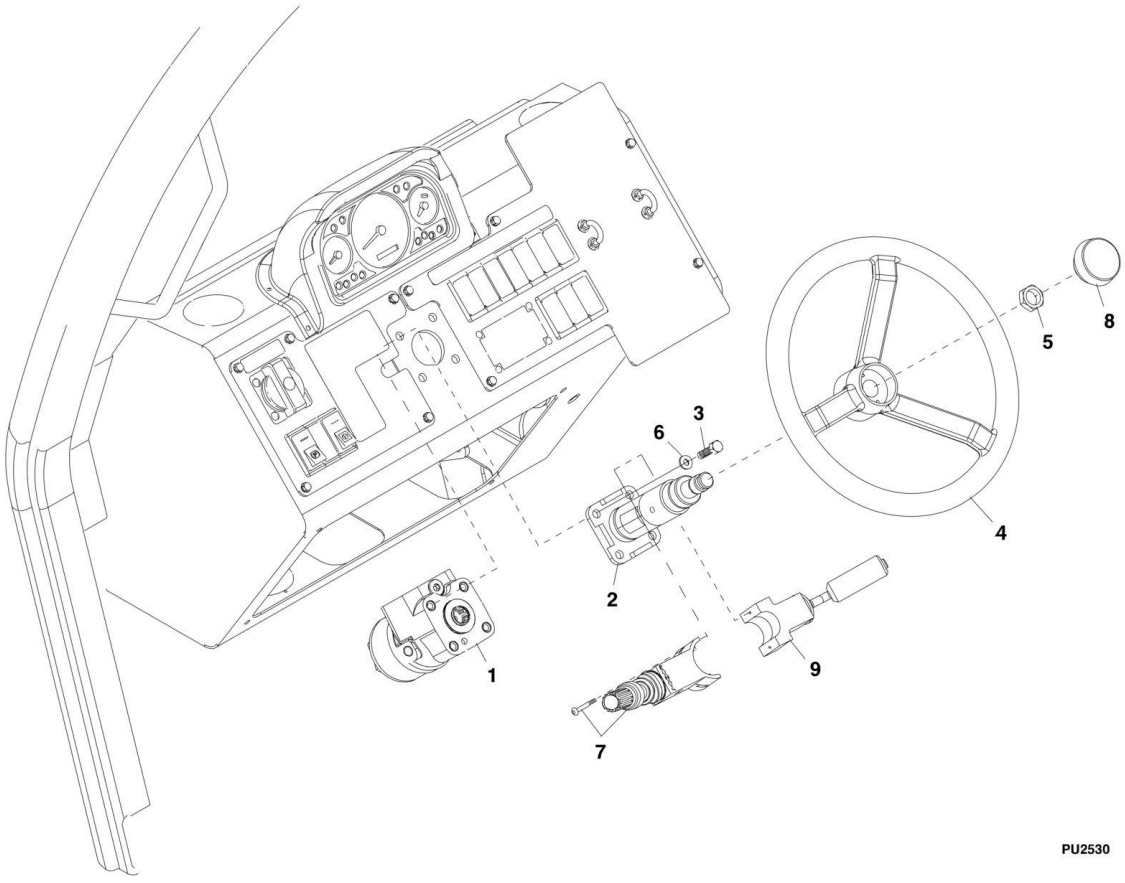

FIGURE 7-7. STEERING COLUMN

ITEM	PART NUMBER	QTY	DESCRIPTION	REV
1	7300409	1	STEER ORBITAL VALVE ASSY	
2	7138833	1	STEERING COLUMN	
3	8303621	4	HEX HD CAPSCREW, 3/8-16X1-1/2, GR5	
4	7138836	1	STEERING WHEEL	
4	7029367	1	HORN BRUSH KIT	
5	8305916	1	STEERING WHEEL NUT	
6	8307110	4	WASHER, 3/8	
7		Ref	SELECTOR TRANSMISSION CONTROL, (See ELECTRICAL SECTION for Breakdown)	
8		Ref	HORN BUTTON SWITCH, (See ELECTRICAL SECTION for Breakdown)	
9		Ref	TURN SIGNAL CONTROL SELECTOR, (See OPTIONS SECTION for Breakdown)	

FIGURE 7-8. FRAME LEVEL CONTROL VALVE ASSEMBLY

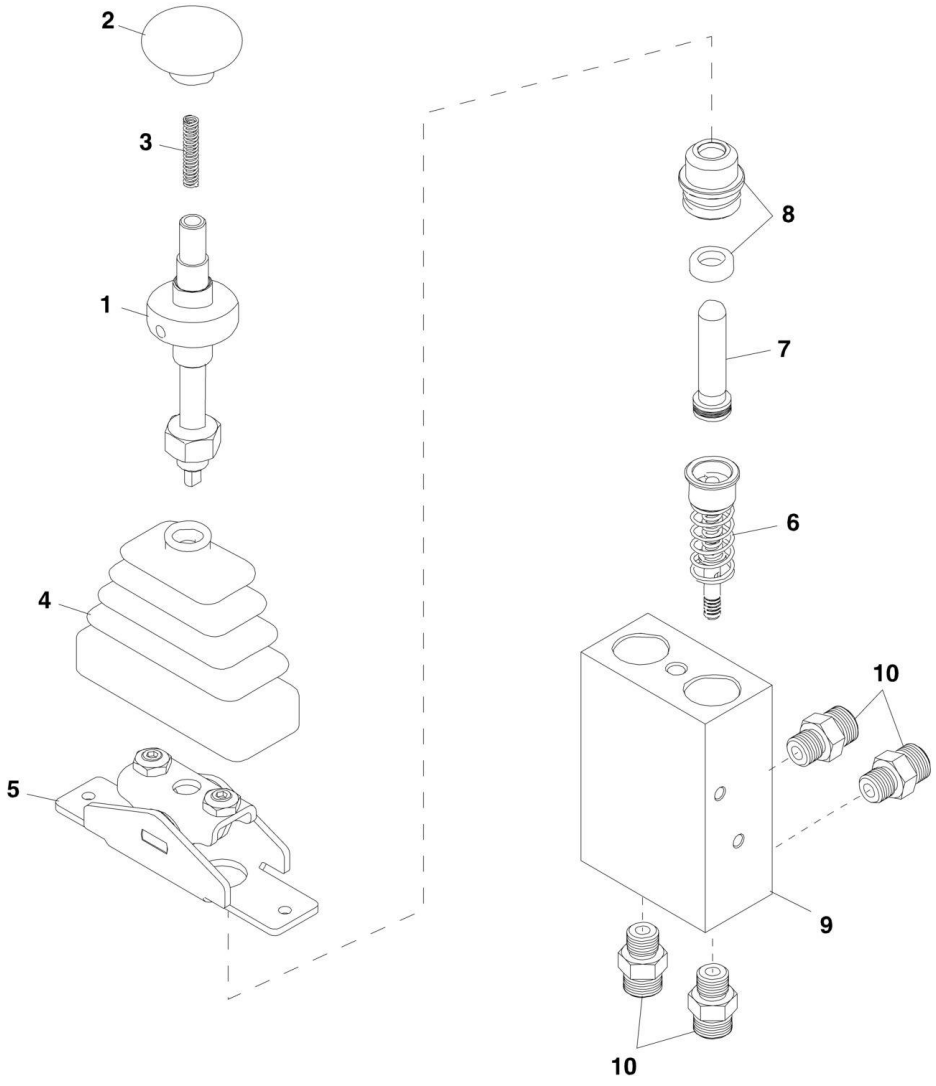

FIGURE 7-8. FRAME LEVEL CONTROL VALVE ASSEMBLY

ITEM	PART NUMBER	QTY	DESCRIPTION	REV
	8902309	1	FRAME LEVEL CONTROLLER, (includes all items)	AA
1	8036613	1	HANDLE ASSEMBLY, (includes items 2 thru 4)	
1	8036616	1	SET SCREW	
2	8036614	1	KNOB	
3	8036615	1	SPRING	
4	8036617	1	BOOT	
5	8036618	1	JOINT MECHANISM ASSEMBLY, (includes mounting bolt)	
6	8036619	1	CAPSULE ASSEMBLY, (includes item 7)	
7	7029419	1	PLUNGER ASSEMBLY, (includes item 8)	
8	8036620	1	PLUNGER SEAL KIT	
9	N.S.S.	1	VALVE BODY	
10	2110606	4	CONNECTOR	

FIGURE 7-9. JOYSTICK CONTROL VALVE ASSEMBLY

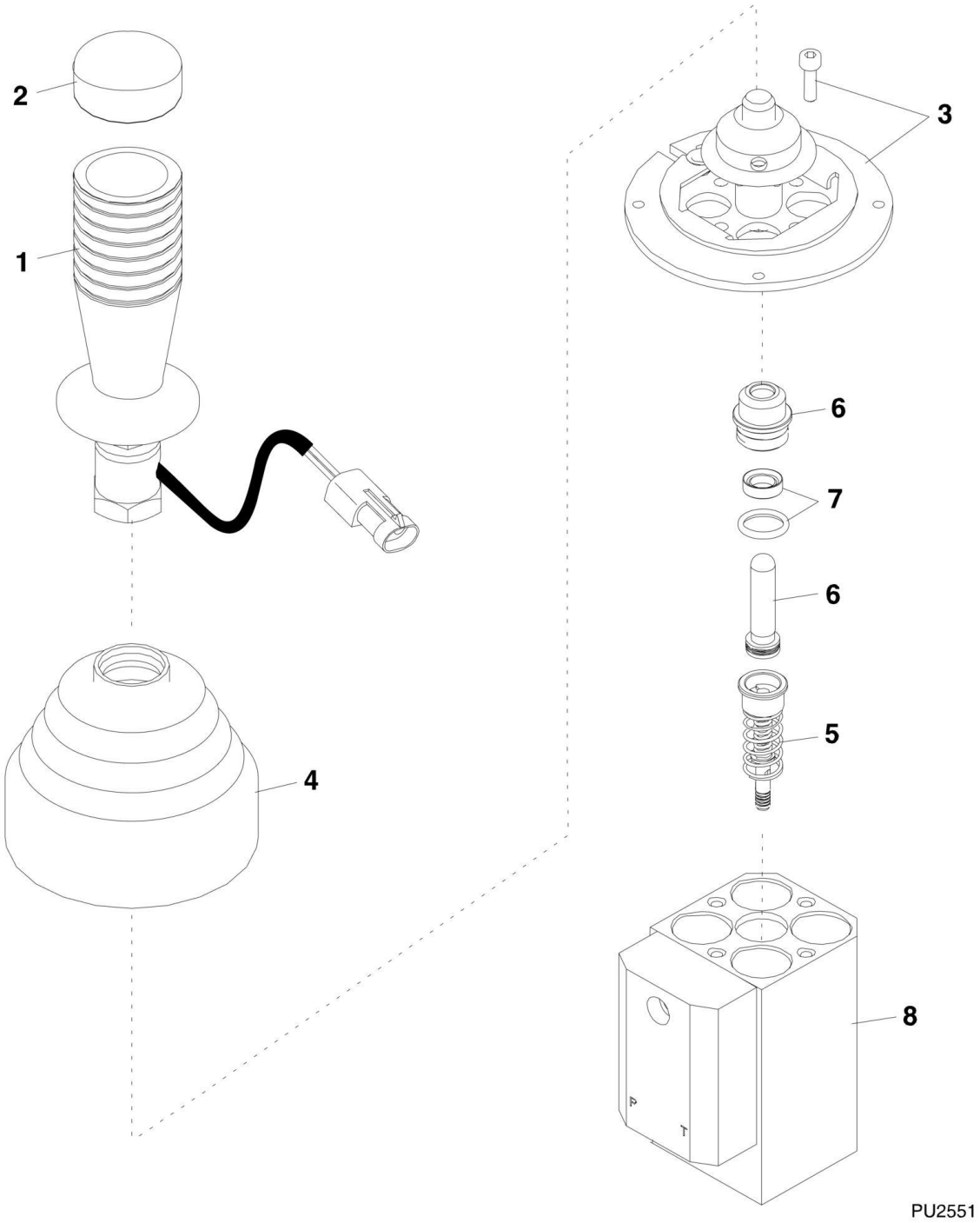

FIGURE 7-9. JOYSTICK CONTROL VALVE ASSEMBLY

ITEM	PART NUMBER	QTY	DESCRIPTION	REV
	8902330	1	JOYSTICK CONTROL VALVE ASSY, (includes all items)	B
1	8036621	1	HANDLE ASSY w/SWITCH, (includes item 2)	
2	8036625	1	BUTTON COVER	
3	8036622	1	JOINT ASSY, (includes item 4)	
4	8036623	1	BOOT	
5	8036624	4	CAPSULE ASSY, (includes item 6)	
6	7029419	1	PLUNGER ASSY, (includes item 7)	
7	8036620	1	PLUNGER SEAL KIT	
8		Ref	VALVE BODY	

FIGURE 7-10. JOYSTICK CONTROL VALVE ASSEMBLY, (SINGLE)

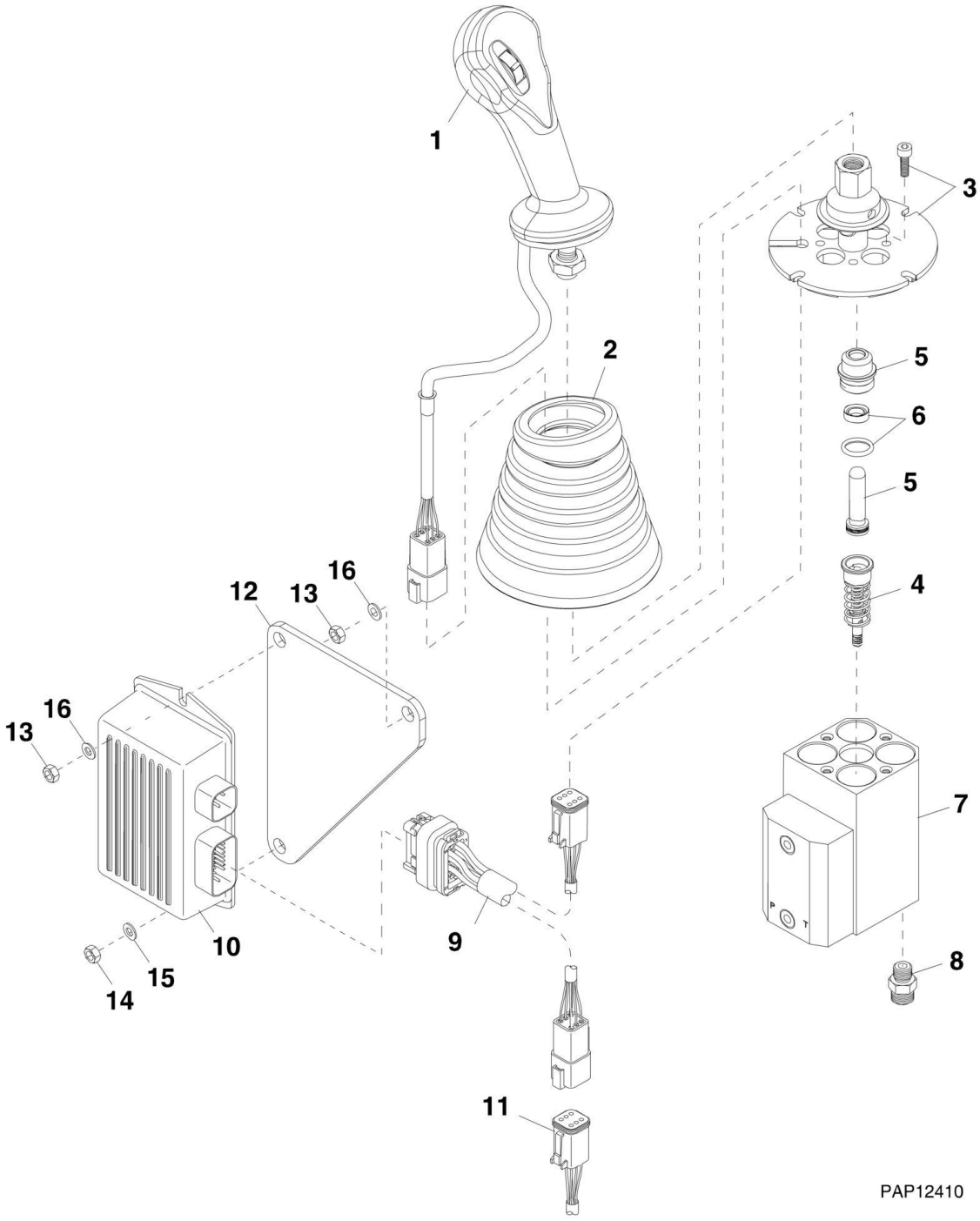

FIGURE 7-10. JOYSTICK CONTROL VALVE ASSEMBLY, (SINGLE)

ITEM	PART NUMBER	QTY	DESCRIPTION	REV
	8902335	1	JOYSTICK CONTROL VALVE ASSY, (single), (includes items 1 thru 10)	B
1	N.S.S.	1	HANDLE ASSY WITH SWITCH	
2	8036805	1	BOOT	
3	8036807	1	JOINT ASSY	
4	8036624	4	CAPSULE ASSY, (includes item 5)	
5	7029419	1	PLUNGER ASSY, (includes item 6)	
6	8036620	1	PLUNGER SEAL KIT	
7	N.S.S.	1	VALVE BODY	
8	2110606	6	HOSE CONNECTOR	
9	7301810	1	JUMPER HARNESS	
10	7301809	1	JOYSTICK CONTROLLER	
11		Ref	ELECTRICAL COMPONENTS, (See ELECTRICAL SECTION for Breakdown)	
12	7301808	1	JOYSTICK CONTROLLER BRACKET	
13	8305047	2	HEX NUT, M6X1.0, (torque to 5.2-9.2 lb-ft/7-12.5 Nm)	
14	8310188	1	HEX NUT, M5X0.80, (torque to 3.0-5.5 lb-ft/4.1-7.5 Nm)	
15	8310390	1	PLAIN WASHER, M5	
16	8307219	2	PLAIN WASHER, M6	

SECTION 8 - HYDRAULIC CIRCUITS

FIGURE 8-1. PUMP, SUCTION AND RETURN (644E SN 17569 through 20123, SN 0160002514 through 0160003108; 944E SN 17569 through 20123, SN 0160002514 through 0160003140)

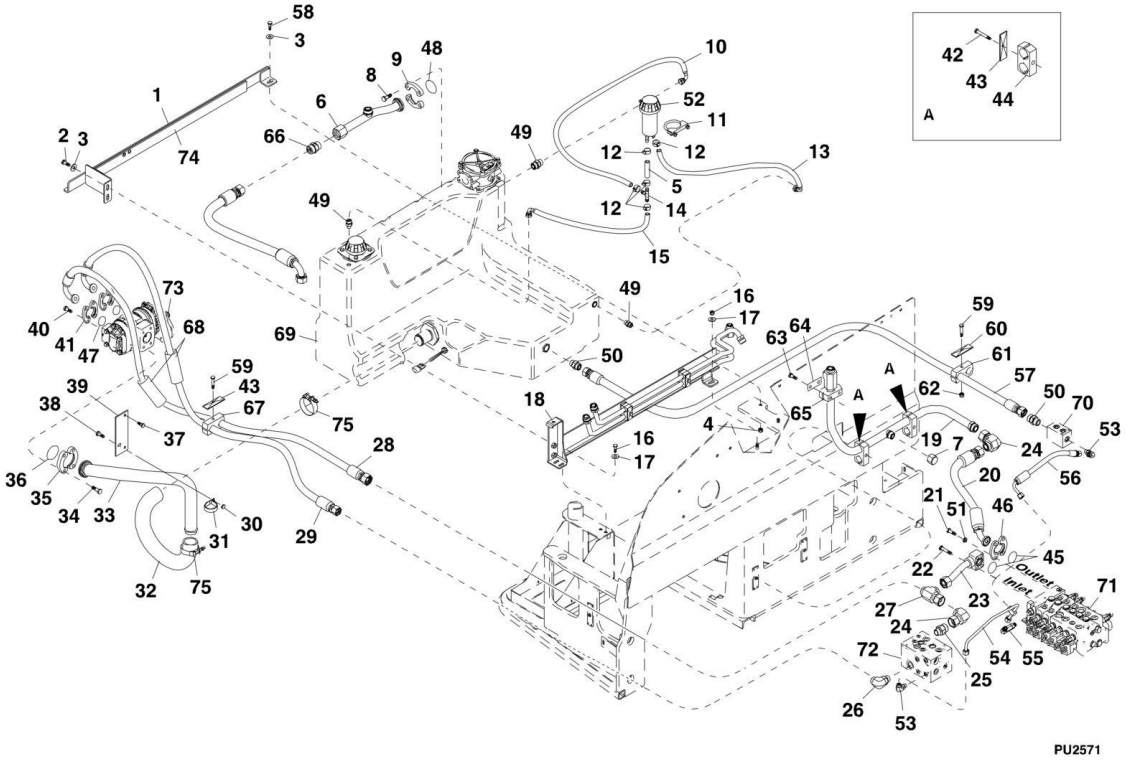

FIGURE 8-1. PUMP, SUCTION AND RETURN (644E SN 17569 through 20123, SN 0160002514 through 0160003108; 944E SN 17569 through 20123, SN 0160002514 through 0160003140)

ITEM	PART NUMBER	QTY	DESCRIPTION	REV
1	7301772	1	HYDRAULIC TANK SUPPORT BRACKET, (includes item 74)	AA
2	8303790	2	HEX HD CAPSCREW, M12X30, GR8.8	
3	8307220	4	FLAT WASHER, 12mm	
4	8305044	2	HEX NUT, M12X1.75	
5	2717029	1	SPECIAL HOSE	
6	7300484	1	TUBE ASSEMBLY	
7	2170912	1	CAP	
8	8310414	4	HEX HD CAPSCREW, 1/2-13X1-1/2, GR8	
9	8530036	2	FLANGE HALF	
10	2717031	1	SPECIAL HOSE	
11	8275212	1	MUFFLER CLAMP, 2-1/2IN U TYPE	
12	8410009	5	HOSE CLAMP, TYPE F	
13	2717032	1	SPECIAL HOSE	
14	8430099	1	BARBED HOSE TEE, FOR 1/2 ID HOSE	
15	2717030	1	SPECIAL HOSE	
16	8303798	2	HEX HD CAPSCREW, M10X25, GR8.8	
17	8307221	2	FLAT WASHER, 10mm	
18		Ref	HYDRAULIC TANK RETAINER ASSEMBLY, (See TILT COMPENSATION CYLINDER for Breakdown)	
19	7300732	1	TUBE ASSEMBLY	
20	2716934	1	HOSE ASSEMBLY	
21	8303675	4	HEX HD CAPSCREW, 3/8-16X1-1/4	
22	3931632	4	HEX HD CAPSCREW, 3/8-16X2	
23	7300998	1	TUBE ASSEMBLY	
24	2172116	2	ELBOW, 90, (swivel nut)	
25	2111612	1	STRAIGHT FITTING	
26	2131212	1	ELBOW, 90	
27	8770214	1	SWIVEL RUN TEE	
28	2716937	1	HOSE ASSEMBLY	
29	2716936	1	HOSE ASSEMBLY	
30	8305654	1	HEX LOCKNUT, M8X1.25	
31	8410001	1	TUBE CLIP, 2.0	
32	2716911	1	SPECIAL HOSE	
33	7300485	1	TUBE ASSEMBLY	
34	8303626	4	HEX HD CAPSCREW, 1/2-13X1-1/2	
35	8546407	2	FLANGE HALF	
36	8640208	1	O-Ring	
37	8303784	2	HEX HD CAPSCREW, M10X20, GR8.8	
38	8310623	1	CARRIAGE BOLT, M8X25, GR8.8	
39	7300969	1	TUBE CLAMP BRACKET	
40	8303675	8	HEX HD CAPSCREW, 3/8-16X1-1/4	
41	8530035	4	FLANGE HALF	
42	8303550	2	HEX HD CAPSCREW, M8X60, GR8.8	
43	8750025	3	TWIN CLAMP COVER	
44	8750022	2	CLAMP	
45	8640123	2	O-RING	
46	8530030	2	FLANGE HALF	
47	8630008	2	O-RING	
48	8630009	1	O-RING	

ITEM	PART NUMBER	QTY	DESCRIPTION	REV
49	2110808	3	CONNECTOR	
50	2111212	2	STRAIGHT FITTING, (torque to 125-135 lb-ft)	
51	8307005	4	LOCKWASHER, 3/8	
52	7139980	1	BREATHER ASSEMBLY	
53	2130606	2	ELBOW, 90	
54	7301030	1	UNFILTERED TEE TUBE ASSEMBLY	
55	8770154	1	ELBOW, 90	
56	2716974	1	HOSE ASSEMBLY	
57	2717204	1	HOSE ASSEMBLY	
58	8310164	1	HEX HD CAPSCREW, M12X40, GR8.8	
59	8303528	2	HEX HD CAPSCREW, M8X65, GR8.8 **(SN 19483 through 20118, SN 0160002519 through 0160003140)**	
60	8750025	1	TWIN CLAMP COVER **(SN 19483 through 20118, SN 0160002519 through 0160003140)**	
61	8750022	1	TWIN CLAMP SET, 1.26 DIA **(SN 19483 through 20118, SN 0160002519 through 0160003140)**	
62	8750043	1	RAIL NUT, M8	
63	8303703	2	HEX HD CAPSCREW, 1/4-20X2-1/2, GR5	
64	8750001	1	SINGLE COVER PLATE	
65	8750005	1	SINGLE CLAMP SET, 1.25 DIA	
66	8902856	1	CHECK VALVE, 1	
67	8750024	1	TWIN CLAMP SET, 1.10 DIA	
69		Ref	HYDRAULIC TANK ASSEMBLY, (See HYDRAULIC COMPONENT SECTION for Breakdown)	
70	7300778	1	MANIFOLD VALVE	
71		Ref	MAIN CONTROL VALVE, (See HYDRAULIC COMPONENT SECTION for Breakdown)	
72		Ref	ACCUMULATOR CHARGE VALVE, (See HYDRAULIC COMPONENT SECTION for Breakdown)	
73		Ref	GEAR PUMP, (See HYDRAULIC COMPONENT SECTION for Breakdown)	
74	8581036	1	FOAM STRIP	
75	8405209	2	T-BOLT CLAMP	

FIGURE 8-2. PUMP, SUCTION AND RETURN (644E SN 0160003109 through 644E; 944E SN 0160003141 through 944E)

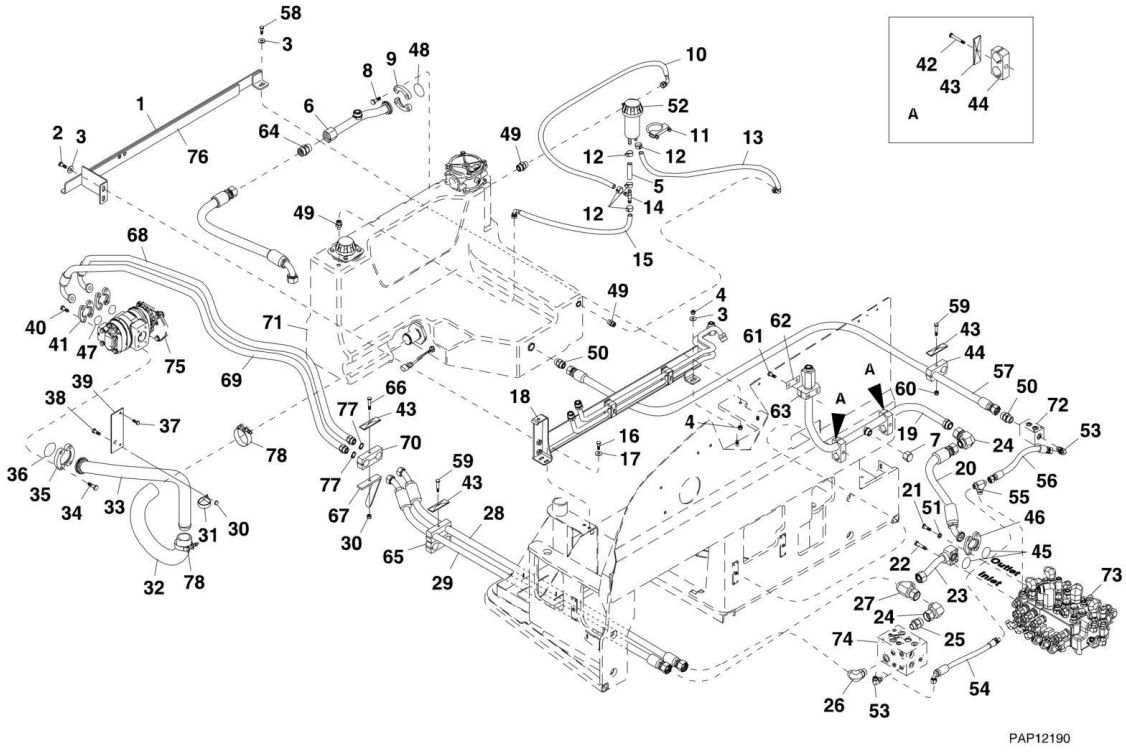

FIGURE 8-2. PUMP, SUCTION AND RETURN (644E SN 0160003109 through 644E; 944E SN 0160003141 through 944E)

ITEM	PART NUMBER	QTY	DESCRIPTION	REV
1	7301772	1	HYDRAULIC TANK SUPPORT BRACKET, (includes item 76)	AA
2	8303790	2	HEX HD CAPSCREW, M12X30, GR8.8	
3	8307220	4	PLAIN WASHER, 12mm	
4	8305044	2	HEX NUT, M12X1.75	
5	2717029	1	SPECIAL HOSE	
6	3460440	1	TUBE ASSEMBLY	
7	2170912	1	CAP	
8	0681812	4	HEX HD CAPSCREW, 1/2-13X1-1/2	
9	8530036	2	FLANGE HALF	
10	2717031	1	SPECIAL HOSE	
11	8275212	1	MUFFLER CLAMP, 2-1/2 U TYPE	
12	8410009	5	HOSE CLAMP, TYPE F	
13	2717032	1	SPECIAL HOSE	
14	8430099	1	BARBED HOSE TEE, 1/2 ID HOSE	
15	2717030	1	SPECIAL HOSE	
16	8303798	2	HEX HD CAPSCREW, M10X25, GR8.8	
17	8307221	2	FLAT WASHER, M10	
18		Ref	HYDRAULIC TANK RETAINER ASSEMBLY, (See TRANSMISSION OIL COLLER ASSEMBLY for Breakdown)	
19	7300732	1	TUBE ASSEMBLY	
20	2716934	1	HOSE ASSEMBLY	
21	8303675	4	HEX HD CAPSCREW, 3/8-16X1-1/4	
22	3931632	4	HEX HD CAPSCREW, 3/8-16X2	
23	7301843	1	TUBE ASSEMBLY	
24	2172116	2	ELBOW, 90, (swivel nut)	
25	2111612	1	STRAIGHT FITTING	
26	2131212	1	ELBOW, 90	
27	2170716	1	SWIVEL RUN TEE	
28	2717289	1	HOSE ASSEMBLY	
29	2717288	1	HOSE ASSEMBLY	
30	8305654	2	HEX LOCKNUT, M8X1.25	
31	8410001	1	TUBE CLIP, 2.0	
32	2716911	1	SPECIAL HOSE	
33	7300485	1	TUBE ASSEMBLY	
34	8303626	4	HEX HD CAPSCREW, 1/2-13X1-1/2, GR5	
35	10717672	2	FLANGE HALF	
36	8640208	1	O-RING	
37	8303784	2	HEX HD CAPSCREW, M10X20, GR8.8	
38	8310623	1	CARRIAGE BOLT, M8X25, GR8.8	
39	7300969	1	TUBE CLAMP BRACKET	
40	8303675	8	HEX HD CAPSCREW, 3/8-16X1-1/4	
41	8530035	4	FLANGE HALF	
42	8303550	2	HEX HD CAPSCREW, M8X60, GR8.8	
43	8750025	5	TWIN CLAMP COVER	
44	8750022	3	CLAMP	
45	8640123	2	O-RING	
46	8530030	2	FLANGE HALF	
47	8630008	2	O-RING	
48	8630009	1	O-RING	

ITEM	PART NUMBER	QTY	DESCRIPTION	REV
49	2110808	3	CONNECTOR, (torque to 25-40 lb-ft)	
50	2111212	2	STRAIGHT FITTING, (torque to 125-135 lb-ft)	
51	8307005	4	LOCKWASHER, 3/8	
52	7139980	1	BREATHER ASSEMBLY	
53	2130606	2	ELBOW, 90	
54	2717194	1	HOSE ASSEMBLY	
55	2170406	1	BRANCH TEE	
56	2717193	1	HOSE ASSEMBLY	
57	2717204	1	HOSE ASSEMBLY	
58	8310164	1	HEX HD CAPSCREW, M12X40, GR8.8	
59	8303528	2	HEX HD CAPSCREW, M8X65, GR8.8 **(644E SN 0160003109 through 0160043356; 944E SN 0160003141 through 0160041823)**	
60	8750043	1	RAIL NUT, M8	
61	8303703	2	HEX HD CAPSCREW, 1/4-20X2-1/2, GR5	
62	8750001	1	SINGLE COVER PLATE	
63	8750005	1	SINGLE CLAMP SET, 1.25 DIA	
64	8902856	1	CHECK VALVE, 1	
65	8750024	1	TWIN CLAMP SET, 1.10 DIA	
66	8310030	1	HEX HD CAPSCREW, M8X80, GR8.8	
67	0903071	1	HYDRAULIC TUBE HOLD BRACKET	
68	7301873	1	PUMP TUBE ASSEMBLY, (includes item 77)	
69	7301874	1	PUMP TUBE ASSEMBLY, (includes item 77)	
70	1321136	1	TWIN CLAMP SET	
71		Ref	HYDRAULIC RESERVOIR, (See HYDRAULIC COMPONENTS SECTION for Breakdown)	
72	7300778	1	MANIFOLD VALVE	
73		Ref	MAIN CONTROL VALVE, (See HYDRAULIC COMPONENTS SECTION for Breakdown)	
74		Ref	ACCUMULATOR CHARGE VALVE, (See HYDRAULIC COMPONENTS SECTION for Breakdown)	
75		Ref	GEAR PUMP, (See HYDRAULIC COMPONENTS SECTION for Breakdown)	
76	8581036	1	FOAM STRIP	
77	8630006	2	O-RING	
78	8405209	2	T-BOLT CLAMP	

FIGURE 8-3. PUMP, SUCTION AND RETURN (644E SN 0160048717 to Present, Including 0160045421; 944E SN 0160041827 to Present)

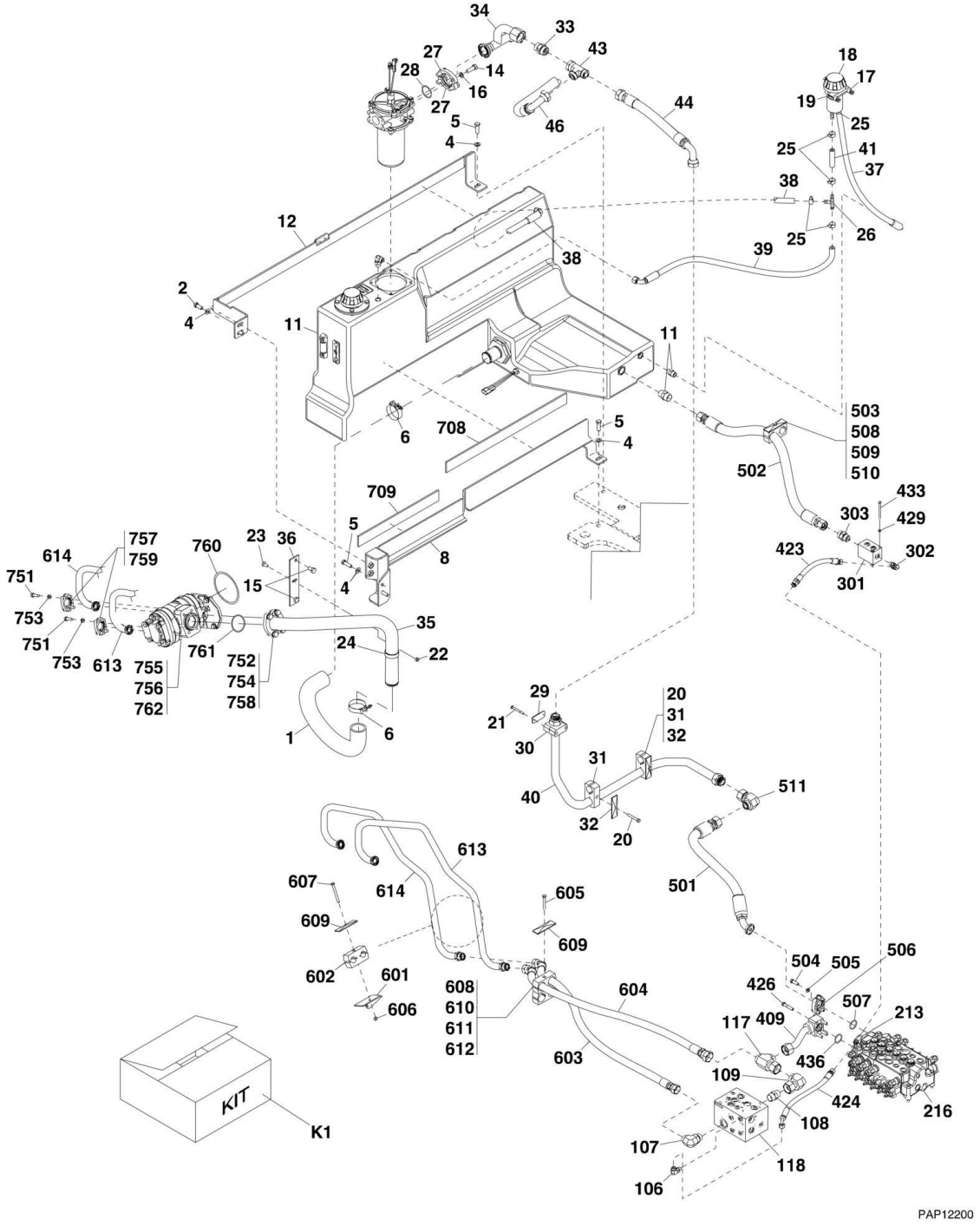

FIGURE 8-3. PUMP, SUCTION AND RETURN (644E SN 0160048717 to Present, Including 0160045421; 944E SN 0160041827 to Present)

ITEM	PART NUMBER	QTY	DESCRIPTION	REV
	1001112352	Ref	HYDRAULIC COMPONENT INSTALLATION, (not available to order, see items 1 thru 46 for service) **(944E SN 0160041827 through 0160045848)**	D
	1001138002	Ref	HYDRAULIC COMPONENT INSTALLATION, (not available to order, see items 1 thru 46 for service) **(644E SN 0160048717 to Present, Including 0160045421; 944E SN 0160045879 to Present)**	A
1	2716911	1	HOSE	
2	8303790	2	HEX HD CAPSCREW, M12X30, GR8.8, (torque to 33-66 lb-ft/44-90 Nm)	
4	8307220	6	WASHER, 12mm	
5	8310164	4	HEX HD CAPSCREW, M12X40, GR8.8, (torque to 33-66 lb-ft/44-90 Nm)	
6	8405209	2	T-BOLT CLAMP	
8	1001112354	1	HYDRAULIC TANK RETAINER ASSEMBLY, (includes items 708 & 709)	B
11		Ref	HYDRAULIC TANK, (See HYDRAULIC COMPONENTS SECTION for Breakdown)	
12	1001112368	1	HYDRAULIC TANK SUPPORT BRACKET	
12	1001112370	1	FOAM SEAL	
14	0681812	4	HEX HD CAPSCREW, 1/2-13X1-1/2, GR8	
15	0761210	2	HEX HD CAPSCREW, M12X20, GR8.8	
16	4761800	4	LOCKWASHER, 1/2	
17	7130131	2	SPACER	
18	7139980	1	BREATHER ASSEMBLY	
19	8275212	1	MUFFLER CLAMP, 2-1/2 IN, U TYPE, (torque to 25-30 lb-ft/34-41 Nm)	
20	8303550	2	HEX HD CAPSCREW, M8X60, GR8.8	
21	8303703	2	HEX HD CAPSCREW, 1/4-20X2-1/2, GR5	
22	8305654	1	HEX NUT, M8X1.25	
23	8310623	1	CARRIAGE BOLT, M8X25, GR8.8	
24	8410001	1	HOSE CLAMP	
25	8410009	5	GEAR CLAMP, (torque to 0.33 lb-ft/.44 Nm)	
26	8430099	1	BARBED HOSE TEE, FOR 1/2 ID HOSE	
27	8530036	2	FLANGE HALF	
28	8630009	1	O-RING	
29	8750001	1	SINGLE COVER PLATE	
30	8750005	1	SINGLE CLAMP SET	
31	8750022	2	TWIN CLAMP SET	
32	8750025	2	TWIN COVER PLATE	
33	8902856	1	CHECK VALVE	
34	1001121963	1	RETURN TUBE	
35	1001112377	1	SUPPLY TUBE **(944E SN 0160041827 through 0160045848)**	
35	1001137961	1	SUPPLY TUBE **(644E SN 0160048717 to Present, Including 0160045421; 944E SN 0160045879 to Present)**	
36	1001112379	1	TUBE MOUNT BRACKET	
37	1001112601	1	HOSE	
38	1001112602	1	HOSE	
39	1001112603	1	HOSE	
40	1001116181	1	RETURN TUBE	
41	2717029	1	HOSE	

ITEM	PART NUMBER	QTY	DESCRIPTION	REV
42		Ref	ADAPTER, 90, (not shown), (See OIL COOLER for Breakdown)	
43		Ref	SWIVEL RUN TEE, (See OIL COOLER for Breakdown)	
44		Ref	HOSE ASSEMBLY, (See OIL COOLER for Breakdown)	
45		Ref	HOSE ASSEMBLY, (not shown), (See OIL COOLER for Breakdown)	
46		Ref	HOSE ASSEMBLY, (See OIL COOLER for Breakdown)	
106	2130606	1	ADAPTER, 90, (torque to 24-26 lb-ft)	
107	2131212	1	ADAPTER, 90, (torque to 125-135 lb-ft)	
108	2111612	1	STRAIGHT FITTING, (torque to 125-135 lb-ft)	
109	2172116	1	ADAPTER, 90, (torque to 130-200 lb-ft)	
117	2170716	1	SWIVEL RUN TEE, (torque to 130-200 lb-ft)	
118		Ref	ACCUMULATOR CHARGE/SECONDARY FUNCTION VALVE, (See HYDRAULIC COMPONENTS SECTION for Breakdown)	
213	2170406	1	BRANCH TEE	
216		Ref	MAIN CONTROL VALVE, (See HYDRAULIC COMPONENTS SECTION for Breakdown)	
301	7300778	1	MANIFOLD VALVE	
302	2130606	1	ADAPTER, 90, (torque to 24-26 lb-ft)	
303	2111212	1	STRAIGHT FITTING, (torque to 125-135 lb-ft)	
409	7301843	1	TUBE ASSEMBLY	
423	2717193	1	HOSE ASSEMBLY	
424	2717194	1	HOSE ASSEMBLY	
426	3931632	4	HEX HD CAPSCREW, 3/8-16X2	
429	8307219	2	WASHER, 6mm	
433	8310714	2	HEX HD CAPSCREW, M6X80, GR8.8, (torque to 5-9 lb-ft)	
436	8640123	1	O-RING	
	7301382	Ref	MAIN CONTROL VALVE HYDRAULIC INSTALLATION, (not available to order, see items 501 thru 511 for service)	F
501	2716934	1	HOSE ASSEMBLY	
502	2717204	1	HOSE ASSEMBLY	
503	8303528	1	HEX HD CAPSCREW, M8X65, GR8.8, (torque to 13-23 lb-ft)	
504	8303675	4	HEX HD CAPSCREW, 3/8-16X1-1/4, GR5, (torque to 33-37 lb-ft)	
505	8307005	4	LOCKWASHER, 3/8	
506	8530030	2	FLANGE HALF	
507	8640123	1	O-RING	
508	8750022	1	TWIN CLAMP SET	
509	8750025	1	TWIN COVER PLATE	
510	8750043	1	RAIL NUT, M8	
511	2172116	1	ADAPTER, 90	
	1001112199	Ref	GEAR PUMP HYDRAULIC INSTALLATION, (944E), (not available to order, see items 601 thru 614 for service) **(944E SN 0160041827 through 0160045848)**	B
	1001137990	Ref	GEAR PUMP HYDRAULIC INSTALLATION, (644E 944E), (not available to order, see items 601 thru 614 for service) **(644E SN 0160048717 to Present, Including 0160045421; 944E SN 0160045879 to Present)**	A
601	0903071	1	HYDRAULIC TUBE HOLD BRACKET	
602	1321136	1	TWIN CLAMP SET	
603	2717288	1	HOSE ASSEMBLY	
604	2717289	1	HOSE ASSEMBLY	
605	8303528	1	HEX HD CAPSCREW, M8X65, GR8.8, (torque to 12-22 lb-ft)	
606	8305654	1	HEX LOCKNUT, M8X1.25	
607	8310030	1	HEX HD CAPSCREW, M8X80, GR8.8, (torque to 12-22 lb-ft)	

ITEM	PART NUMBER	QTY	DESCRIPTION	REV
608	8750017	1	TWIN CLAMP PLATE	
609	8750025	2	TWIN COVER PLATE	
610	8750039	1	STACKING BOLT	
611	8750040	2	TWIN CLAMP SET	
612	8750043	1	RAIL NUT, M8	
613	1001112200	1	PIPE **(944E SN 0160041827 through 0160045848)**	
613	1001137959	1	PIPE **(644E SN 0160048717 to Present, Including 0160045421; 944E SN 0160045879 to Present)**	
614	1001112202	1	PIPE **(944E SN 0160041827 through 0160045848)**	
614	1001137960	1	PIPE **(644E SN 0160048717 to Present, Including 0160045421; 944E SN 0160045879 to Present)**	
708	1001112800	1	FOAM STRIP	
709	1001112801	1	FOAM STRIP	
	1001138468	Ref	GEAR PUMP INSTALLATION, (644E), (not available to order, see items 751 thru 762 for service)	A
	1001137971	Ref	GEAR PUMP INSTALLATION, (944E), (not available to order, see items 751 thru 762 for service)	A
751	0681610	8	HEX HD CAPSCREW, 3/8-16X1-1/4, GR8, (torque to 35-40 lb-ft)	
752	0681812	4	HEX HD CAPSCREW, 1/2-13X1-1/2, GR8, (torque to 70-90 lb-ft)	
753	4761600	8	LOCKWASHER, 3/8	
754	4761800	4	LOCKWASHER, 1/2	
755		Ref	HEX HD CAPSCREW, M12X30, (See ENGINE AND ATTACHING PARTS SECTION for Breakdown)	
756		Ref	WASHER, 12mm, (See ENGINE AND ATTACHING PARTS SECTION for Breakdown)	
757	8530035	4	FLANGE HALF	
758	10717672	2	FLANGE HALF, (644E)	
758	8546407	2	FLANGE HALF (944E)	
759	8630008	2	O-RING	
760	8630019	1	O-RING	
761	8640208	1	O-RING	
762		Ref	GEAR PUMP, (See HYDRAULIC COMPONENTS SECTION for Breakdown)	
K1	7302197	1	VALVE PLATE HOSE KIT, (includes items 423 & 424)	

FIGURE 8-4. SERVICE AND PARKING BRAKE

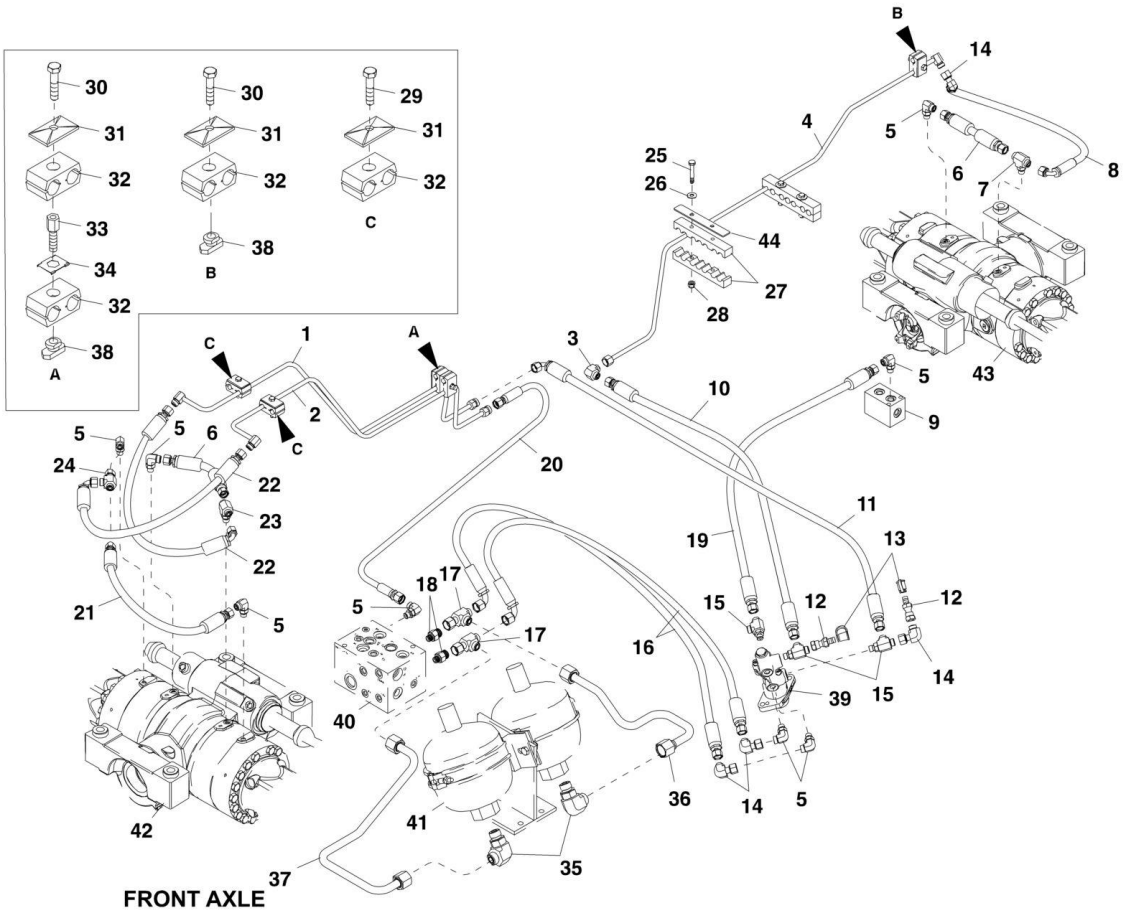

FIGURE 8-4. SERVICE AND PARKING BRAKE

ITEM	PART NUMBER	QTY	DESCRIPTION	REV
1	7300947	1	SERVICE BRAKES TUBE ASSEMBLY **(644E Prior to SN 0160048717, Excluding 0160045421; 944E Prior to SN 0160041827)**	
1	1001121100	1	SERVICE BRAKES TUBE ASSEMBLY **(644E SN 01600408717 to Present, Except Prior to SN 0160045421; 944E SN 0160041827 to Present)**	
2	7300945	1	PARK BRAKE TUBE ASSEMBLY **(644E Prior to SN 0160048717, Excluding 0160045421; 944E Prior to SN 0160041827)**	
2	1001121070	1	PARK BRAKE TUBE ASSEMBLY **(644E SN 0160048717 to Present, Including 0160045421; 944E Including 0160041827;)**	
3	2172006	1	UNION ELBOW, 90	
4	7300757	1	TUBE ASSEMBLY	
5	2130606	8	ELBOW, 90, **(644E Prior to SN 0160039830, Excluding 0160036724, 0160036811, 0160036907 and 0160037012; 944E Prior to SN 0160040124, Excluding 0160034634, 0160036710, 0160036722, 0160036735 and 0160036738)**	
5	2130606	6	ELBOW, 90, **(644E SN 0160039830 to Present, Including 60160036724, 0160036811, 0160036907 and 0160037012; 944E SN 0160040124 to Present, Including 0160034634, 0160036710, 0160036722, 0160036735 and 0160036738)**	
6	2716922	2	HOSE ASSEMBLY	
7	2170406	1	BRANCH TEE **(644E Prior to SN 0160039830, Excluding 0160036724, 0160036811, 0160036907 and 0160037012; 944E Prior to SN 0160040124, Excluding 0160034634, 0160036710, 0160036722, 0160036735 and 0160036738)**	
7	2170406	2	BRANCH TEE **(644E SN 0160039830 to Present, Including 0160036724, 0160036811, 0160036907 and 0160037012; 944E SN 0160040124 to Present, Including 0160034634, 0160036710, 0160036722, 0160036735 and 0160036738)**	
8	2717067	1	HOSE ASSEMBLY **(644E Prior to SN 0160039830, Excluding 0160036724, 0160036811, 0160036907 and 0160037012; 944E Prior to SN 0160040124, Excluding 0160034634, 0160036710, 0160036722, 0160036735 and 0160036738)**	
8	2717067	6	HOSE ASSEMBLY **(644E SN 0160039830 to Present, Including 0160040124, 0160036811, 0160036907 and 0160037012; 944E SN 0160036724 to Present, Including 0160034634, 0160036710, 0160036722, 0160036735 and 0160036738)**	
9		Ref	MANIFOLD VALVE, (See PUMP SECTION AND RETRUN SECTION for Breakdown)	
10	2717038	1	HOSE ASSEMBLY	
11	2716939	1	HOSE ASSEMBLY	
12	8430081	2	DIAGNOSTIC ADAPTER	
13	8430032	2	DUST PLUG	
14	2172106	4	ELBOW, 90, (swivel nut)	
15	2170306	3	RUN TEE	
16	2716951	2	HOSE ASSEMBLY	
17	2170708	2	SWIVEL RUN TEE	
18	2110806	2	CONNECTOR	
19	2716952	1	HOSE ASSEMBLY	
20	2716938	1	HOSE ASSEMBLY	
21	2716923	1	HOSE ASSEMBLY	
22	2716924	2	HOSE ASSEMBLY	
23	2170406	1	BRANCH TEE	
24	2170706	1	SWIVEL RUN TEE **(644E Prior to SN 0160039830, Excluding 0160036724, 0160036811 and 0160036907; 944E Prior to SN**	

ITEM	PART NUMBER	QTY	DESCRIPTION	REV
			0160040124, Excluding 0160034634, 0160036710, 0160036722, 0160036735 and 0160036738; 644 Excluding 0160037012)	
24	2170706	3	SWIVEL RUN TEE **(644E SN 0160039830 to Present, Including 0160040124, 0160036811, 0160036907 and 0160037012; 944E SN 0160036724 to Present, Including 0160034634, 0160036710, 0160036722, 0160036735 and 0160036738)**	
25	8303550	4	HEX HD CAPSCREW, M8X60, GR8.8	
26	8307204	4	PLAIN WIDE WASHER, .375-.438-1.000	
27	7300750	2	CLAMP SET	
28	8305638	4	HEX LOCKNUT, M8-1.25	
29	8310293	2	HEX HD CAPSCREW, M8X50, GR8.8, (single clamp)	
30	8310476	2	HEX HD CAPSCREW, M8X35, GR8.8, (double clamp)	
31	8769123	4	TWIN COVER PLATE	
32	8750042	5	TWIN CLAMP SET	
33	8750037	1	STACKING BOLT	
34	8750017	1	LOCKING PLATE	
35	2130808	2	ELBOW, 90	
36	7300999	1	TUBE ASSEMBLY	
37	7301001-OM	1	TUBE ASSEMBLY	
38	8750043	2	RAIL NUT, M8	
39		Ref	BRAKE VALVE, (See CONTORL SECTION for Breakdown)	
40		Ref	ACCUMULATOR CHARGE VALVE, (See HYDRAULIC COMPONENTS SECTION for Breakdown)	
41		Ref	ACCUMULATORS, (See HYDRAULIC COMPONENTS SECTION for Breakdown)	
42		Ref	FRONT AXLE, (See DRIVE TRAIN SECTION for Breakdown)	
43		Ref	REAR AXLE, (See DRIVE TRAIN SECTION for Breakdown)	
44	1321733	2	CLAMP COVER PLATE **(644E SN 0160028387 to Present; 944E SN 0160028385 to Present)**	
45	2110806	3	CONNECTOR **(644E SN 0160039830 to Present, Including 0160036724, 0160036811, 0160036907 and 0160037012; 944E SN 0160040124 to Present, Including 0160034634, 0160036710, 0160036722, 0160036735 and 0160036738)**	

FIGURE 8-5. EXTEND/RETRACT AND LIFT/LOWER (644E SN 17569 through 20118, SN 0160002519 through 644E; 944E SN 18554 through 20123, SN 0160002514 through 944E)

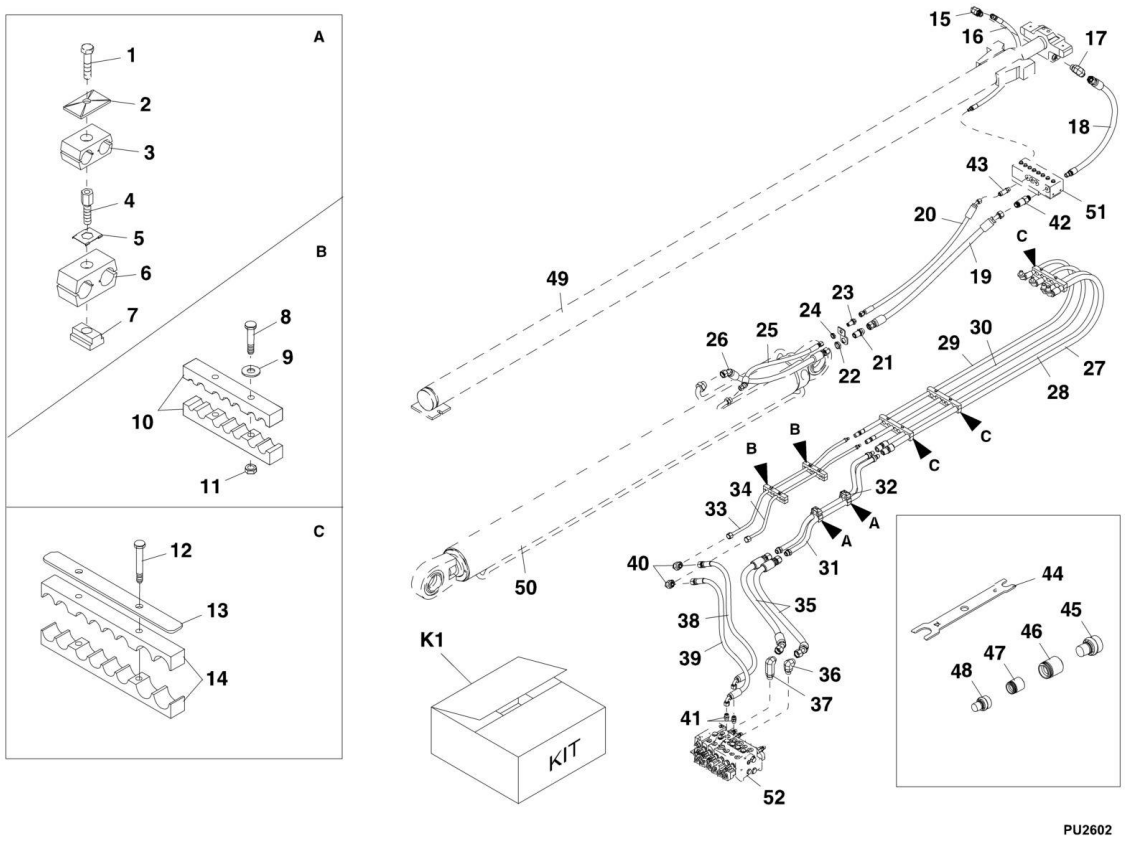

FIGURE 8-5. EXTEND/RETRACT AND LIFT/LOWER (644E SN 17569 through 20118, SN 0160002519 through 644E; 944E SN 18554 through 20123, SN 0160002514 through 944E)

ITEM	PART NUMBER	QTY	DESCRIPTION	REV
1	8310476	2	HEX HD CAPSCREW, M8X35, GR8.8	
2	8769123	2	TWIN COVER PLATE	
3	8769126	2	TWIN CLAMP SET, .50 DIA	
4	8750038	2	STACKING BOLT	
5	8750017	2	TWIN CLAMP LOCKING PLATE	
6	8769127	2	TWIN CLAMP SET, 1.00 DIA	
7	8750043	2	RAIL NUT, M8 THREAD	
8	8303550	4	HEX HD CAPSCREW, M8X60, GR8.8	
9	8307204	4	PLAIN WIDE WASHER, 3/8	
10	7300750	2	CLAMP SET	
11	8305638	4	HEX LOCKNUT, M8X1.25	
12	8303550	6	HEX HD CAPSCREW, M8X60, GR8.8	
13	7300927	3	CLAMP COVER	
14	7300618	3	SPECIAL HOSE CLAMP	
15	2130812	1	ELBOW, 90	
16	2716986	1	HOSE ASSEMBLY	
17	2131212	1	ELBOW, 90	
18	2716989	1	HOSE ASSEMBLY	
19	2717146	1	HOSE ASSEMBLY	
20	2717147	1	HOSE ASSEMBLY	
21	8770300	1	BULKHEAD CONNECTOR	
22	8770085	1	BULKHEAD NUT	
23	8770299	1	BULKHEAD CONNECTOR	
24	8770129	1	BULKHEAD NUT	
25	2717144	1	HOSE ASSEMBLY	
26	2717145	1	HOSE ASSEMBLY	
27	2717069	1	SPECIAL HOSE	
28	2716997	1	HOSE ASSEMBLY	
29	2717070	1	SPECIAL HOSE	
30	2716998	1	HOSE ASSEMBLY	
31	7300737	1	TUBE ASSEMBLY	
32	7300738	1	TUBE ASSEMBLY	
33	7300741	1	TUBE ASSEMBLY	
34	7300744	1	TUBE ASSEMBLY	
35	2716940	2	HOSE ASSEMBLY	
36	2131212	1	ELBOW, 90	
37	8770282	1	TUBE ELBOW	
38	2717063	1	HOSE ASSEMBLY	
39	2717064	1	HOSE ASSEMBLY	
40	2172010	2	UNION ELBOW, 90	
41	2110810	2	CONNECTOR	
42	8770163	1	CONNECTOR	
43	8770117	1	CONNECTOR	
44	7301438	2	STC HOSES 8-12 SERVICE TOOL	
45	7301666	2	12 STC MALE PLUG	
46	7301667	2	12 STC FEMALE CAP	
47	7301663	6	8 STC FEMALE CAP	
48	7301662	6	8 STC MALE PLUG	
49		Ref	EXTEND/RETRACT CYLINDER, (See HYDRAULIC	

ITEM	PART NUMBER	QTY	DESCRIPTION	REV
			COMPONENTS SECTION for Breakdown)	
50		Ref	LIFT CYLINDER, (See HYDRAULIC COMPONENTS SECTION for Breakdown)	
51		Ref	HYDRAULIC JUNCTION MANIFOLD, (See ATTACHMENT TILT AND AUXILIARY for Breakdown)	
52		Ref	MAIN CONTROL VALVE, (See HYDRAULIC COMPONENTS SECTION for Breakdown)	
K1	8024045	1	STC HOSE CONNECTIONS SERVICE KIT, (includes items 44 thru 48)	

FIGURE 8-6. EXTEND/RETRACT AND LIFT/LOWER (644E SN 0160003604 to Present; 944E SN 0160003602 to Present)

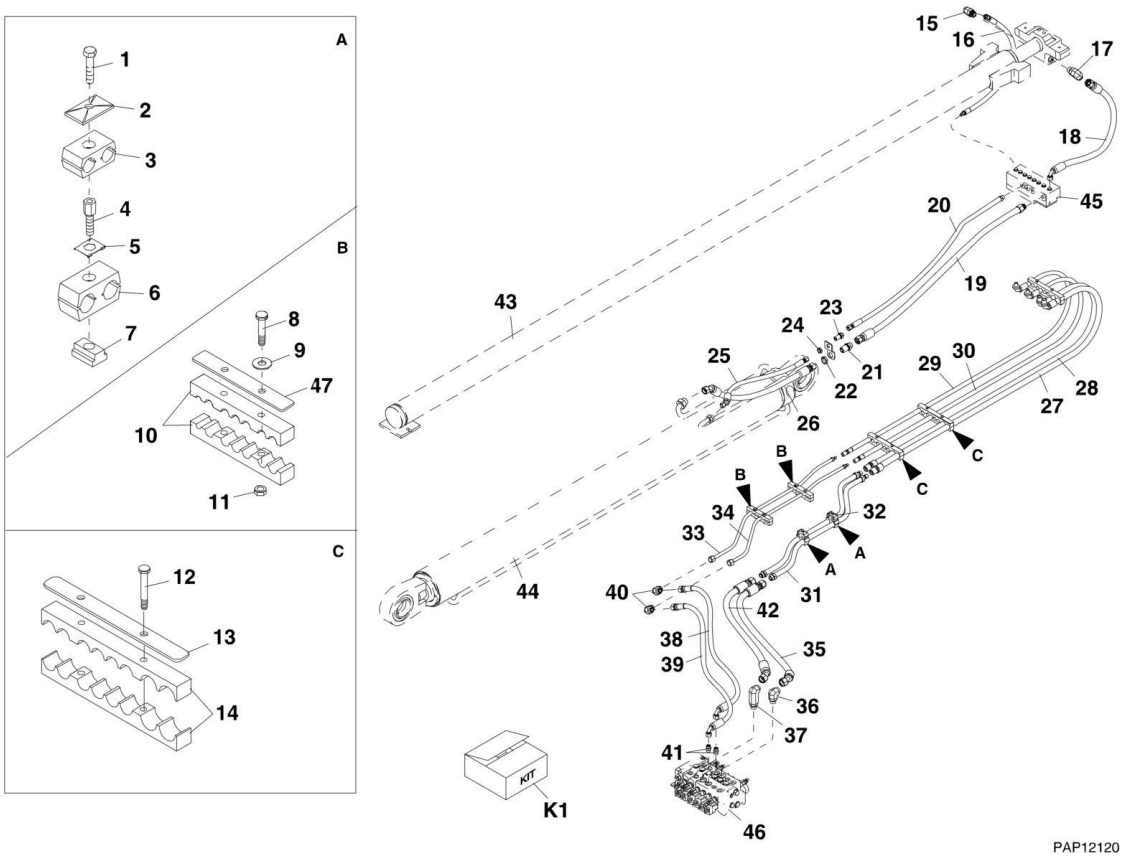

FIGURE 8-6. EXTEND/RETRACT AND LIFT/LOWER (644E SN 0160003604 to Present; 944E SN 0160003602 to Present)

ITEM	PART NUMBER	QTY	DESCRIPTION	REV
1	8310476	2	HEX HD CAPSCREW, M8X35, GR8.8	
2	8769123	2	TWIN COVER PLATE	
3	8769126	2	TWIN CLAMP SET, .50 DIA	
4	8750038	2	STACKING BOLT	
5	8750017	2	TWIN CLAMP LOCKING PLATE	
6	8769127	2	TWIN CLAMP SET, 1.00 DIA	
7	8750043	2	RAIL NUT, M8 THREAD	
8	8303528	4	HEX HD CAPSCREW, M8X65, GR8.8	
9	8307204	4	PLAIN WIDE WASHER, 3/8	
10	7300750	2	CLAMP SET	
11	8305638	4	HEX LOCKNUT, M8X1.25	
12	8303528	4	HEX HD CAPSCREW, M8X65, GR8.8	
13	7300927	2	CLAMP COVER	
14	7300618	2	SPECIAL HOSE CLAMP	
15	2130812	1	ELBOW, 90	
16	2717277	1	HOSE ASSEMBLY	
17	2131212	1	ELBOW, 90	
18	2717278	1	HOSE ASSEMBLY	
19	2717269	1	HOSE ASSEMBLY **(644E SN 0160003604 through 0160017700; 944E SN 0160003602 through 0160017948)**	
19	2717146	1	HOSE ASSEMBLY **(644E SN 0160017701 through 0160018574; 944E SN 0160017949 through 0160018576)**	
19	2717269	1	HOSE ASSEMBLY **(644E SN 0160018578 to Present; 944E SN 0160018633 to Present)**	
20	2717270	1	HOSE ASSEMBLY **(644E SN 0160003604 through 0160017700; 944E SN 0160003602 through 0160017948)**	
20	2717147	1	HOSE ASSEMBLY **(644E SN 0160017701 through 0160018574; 944E SN 0160017949 through 0160018576)**	
20	2717270	1	HOSE ASSEMBLY **(644E SN 0160018578 to Present; 944E SN 0160018633 to Present)**	
21	8770300	1	BULKHEAD CONNECTOR **(644E SN 0160003604 through 0160018889; 944E SN 0160003602 through 0160018893)**	
21	2171112	1	BULKHEAD CONNECTOR **(644E SN 0160018896 through 0160029351; 944E SN 0160018899 through 0160029352)**	
22	8770085	1	BULKHEAD NUT **(SN 0160003604 through 0160029351, SN 0160003602 through 0160029352)**	
23	8770299	1	BULKHEAD CONNECTOR **(644E SN 0160003604 through 0160018889; 944E SN 0160003602 through 0160018893)**	
23	2171108	1	BULKHEAD CONNECTOR **(644E SN 0160018896 through 0160029351; 944E SN 0160018899 through 0160029352)**	
24	8770129	1	BULKHEAD NUT **(644E SN 0160003604 through 0160029351; 944E SN 0160003602 through 0160029352)**	
25	2717271	1	HOSE ASSEMBLY **(644E SN 0160003604 through 0160017700; 944E SN 0160003602 through 0160017948)**	
25	2717144	1	HOSE ASSEMBLY **(644E SN 0160017701 to Present; 944E SN 0160017949 to Present)**	
26	2717273	1	HOSE ASSEMBLY **(644E SN 0160003604 through 0160017700; 944E SN 0160003602 through 0160017948)**	
26	2717145	1	HOSE ASSEMBLY **(644E SN 0160017701 to Present; 944E SN 0160017949 to Present)**	
27	2717267	1	SPECIAL HOSE	
28	2717268	1	HOSE ASSEMBLY	

ITEM	PART NUMBER	QTY	DESCRIPTION	REV
29	2717266	1	SPECIAL HOSE	
30	2717265	1	HOSE ASSEMBLY	
31	7300737	1	TUBE ASSEMBLY	
32	7300738	1	TUBE ASSEMBLY	
33	7300741	1	TUBE ASSEMBLY	
34	7300744	1	TUBE ASSEMBLY	
35	2716940	1	HOSE ASSEMBLY	
36	2131212	1	ELBOW, 90	
37	2170212	1	TUBE ELBOW	
38	2717063	1	HOSE ASSEMBLY	
39	2717064	1	HOSE ASSEMBLY	
40	2172010	2	UNION ELBOW, 90	
41	2110810	2	CONNECTOR	
42	2717384	1	HOSE ASSEMBLY	
43		Ref	EXTEND/RETRACT CYLINDER, (See HYDRAULIC COMPONENT SECTION for Breakdown)	
44		Ref	LIFT CYLINDER, (See HYDRAULIC COMPONENT SECTION for Breakdown)	
45		Ref	HYDRAULIC JUNCTION MANIFOLD, (See ATTACHMENT TILT AND AUXILIARY for Breakdown)	
46		Ref	MAIN CONTROL VALVE, (See HYDRAULIC COMPONENT SECTION for Breakdown)	
47	1321733	2	CLAMP COVER PLATE, (644E & 944E) **(644E SN 0160028387 to Present; 944E SN 0160028385 to Present)**	
K1	7302114	1	HOSE KIT, (includes items 19, 20, 25, 26 and item 2 on TILT COMPENSATION CYLINDER)	

FIGURE 8-7. ATTACHMENT TILT AND AUXILIARY (644E SN 17569 through 19385; 944E SN 17569 through 19385)

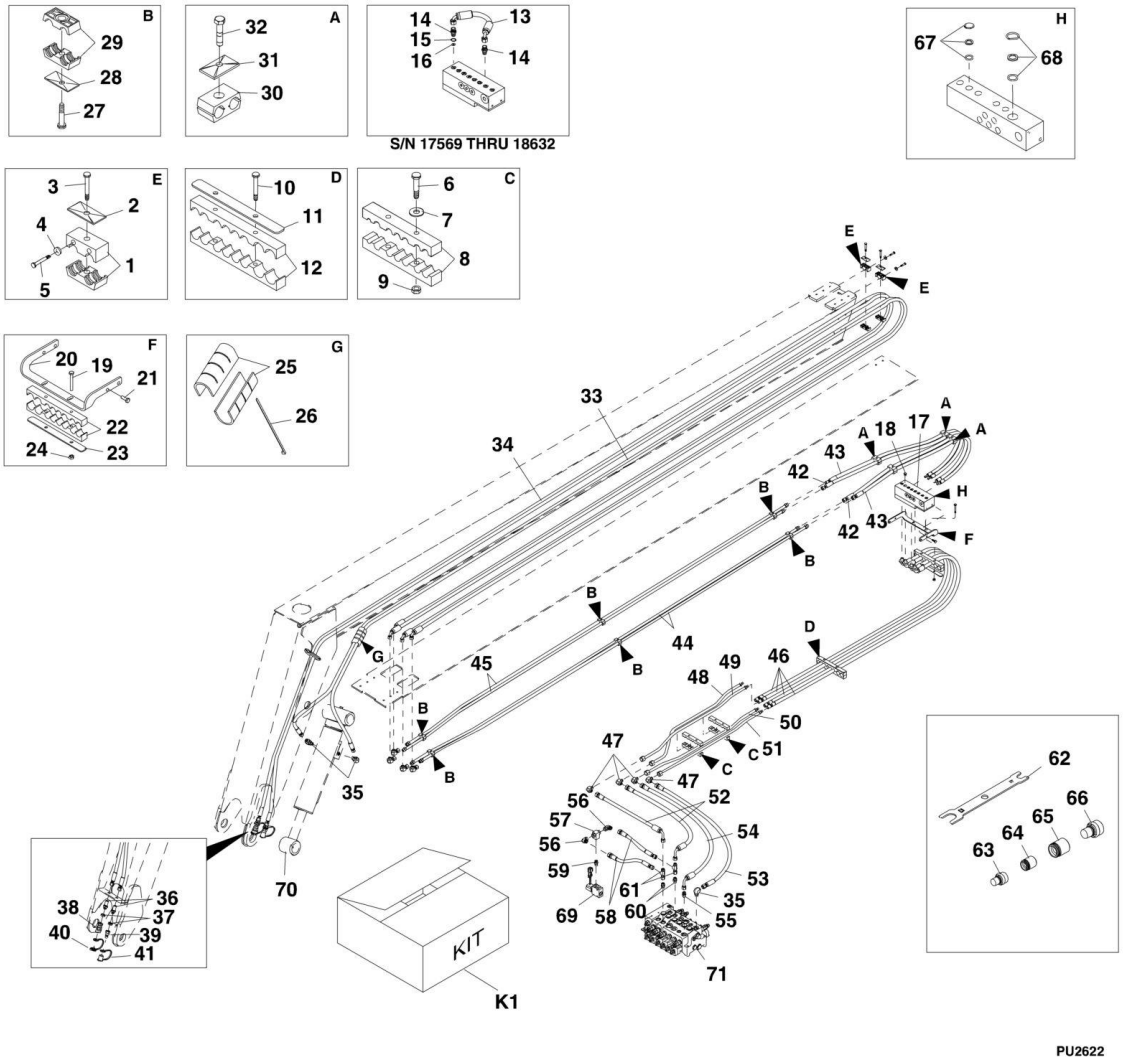

FIGURE 8-7. ATTACHMENT TILT AND AUXILIARY (644E SN 17569 through 19385; 944E SN 17569 through 19385)

ITEM	PART NUMBER	QTY	DESCRIPTION	REV
1	7300567	2	HOSE CLAMP	
2	8769123	2	TWIN COVER PLATE	
3	8310028	2	HEX HD CAPSCREW, M8X70, GR8.8	
4	8307109	4	PLAIN NARROW WASHER, .250	
5	8310703	4	HEX HD CAPSCREW, M6X45, GR8.8	
6	8303550	4	HEX HD CAPSCREW, M8X60, GR8.8	
7	8307204	4	PLAIN WIDE WASHER, 3/8	
8	7300750	2	CLAMP SET	
9	8305638	4	HEX LOCKNUT, M8-1.25	
10	8303550	2	HEX HD CAPSCREW, M8X60, GR8.8	
11	7300927	1	CLAMP COVER	
12	7300618	1	HOSE CLAMP	
13	2717115	1	SPECIAL HOSE **(SN 17569 through 18632)**	
14	2110604	2	CONNECTOR	
15	8630003	1	O-RING, .360ID	
16	7139918	1	ORIFICE DISK, .039 DIA	
17	7301072	1	HYDRAULIC JUNCTION MANIFOLD	
18	7301301	AR	PRESSURE BLEED PLUG, (6 Required on), (8 Required on) **(SN 17567 through 18632, SN 18633 to Present)**	
19	8310028	2	HEX HD CAPSCREW, M8X70, GR8.8	
20	7301154	1	HOSE CLAMP MOUNTING BRACKET	
21	8303783	4	HEX HD CAPSCREW, M8X25, GR8.8	
22	7300618	1	HOSE CLAMP	
23	7300927	1	CLAMP COVER	
24	8305043	2	NUT, M8-1.25	
25	7301536	2	HOSE GUARD	
26	8584003	3	TIE WRAP	
27	8310476	6	HEX HD CAPSCREW, M8X35, GR8.8	
28	8769123	6	TWIN COVER PLATE	
29	8769122	6	TWIN CLAMP SET, .625 DIA	
30	8750027	4	TWIN CLAMP SET, .84 DIA	
31	8769128	4	TWIN COVER PLATE	
32	8310293	4	HEX HD CAPSCREW, M8X50, GR8.8	
33	2717175	1	ATTACHMENT TILT TWINLINE HOSE	
34	2717176	1	AUXILIARY TWINLINE HOSE	
35	2130808	3	ELBOW, 90	
36	8770136	2	BULKHEAD CONNECTOR	
37	8770129	2	BULKHEAD NUT	
38	91403413	1	FEMALE QUICK-DISCONNECT COUPLER	
39	91403414	1	MALE QUICK-DISCONNECT NIPPLE	
40	8420055	1	DUST PLUG, FOR QUICK-DISCONNECT	
41	8420053	1	DUST CAP, FOR QUICK-DISCONNECT	
42	2717192	2	HOSE ASSEMBLY	
43	2717191	2	HOSE ASSEMBLY	
44	7301641	2	COMMON BOOM TUBE ASSEMBLY, (left side)	
45	7301642	2	COMMON BOOM TUBE ASSEMBLY, (right side)	
46	2716998	4	HOSE ASSEMBLY	
47	2172010	4	UNION ELBOW, 90	
48	7300742	1	TUBE ASSEMBLY	

ITEM	PART NUMBER	QTY	DESCRIPTION	REV
49	7300743	1	TUBE ASSEMBLY	
50	7300745	1	TUBE ASSEMBLY	
51	7300746	1	TUBE ASSEMBLY	
52	2717062	2	HOSE ASSEMBLY	
53	2717065	1	HOSE ASSEMBLY	
54	2717066	1	HOSE ASSEMBLY	
55	2110808	1	CONNECTOR	
56	2130606	2	ELBOW, 90	
57	8902175	1	VALVE SHUTTLE	
58	2717118	2	HOSE ASSEMBLY	
59	8770152	1	UNION	
60	8770117	2	CONNECTOR	
61	8770125	2	SWIVEL RUN TEE	
62	7301438	2	STC HOSES 8-12 SERVICE TOOL	
63	7301666	2	12 STC MALE PLUG	
64	7301667	2	12 STC FEMALE CAP	
65	7301663	6	8 STC FEMALE CAP	
66	7301662	6	8 STC MALE PLUG	
67	7020368	16	STC PORT REPAIR SERVICE KIT, (port size - 08), (includes retaining ring, back-up ring and o-ring)	
68	7020369	4	STC PORT REPAIR SERVICE KIT, (port size -12), (includes retaining ring, back-up ring and o-ring)	
69		Ref	AUX. PRESS. DUMP VALVE SOLENOID, (See HYDRAULIC COMPONENTS SECTION for Breakdown)	
70		Ref	ATTACHMENT TILT CYLINDER, (See HYDRAULIC COMPONENTS SECTION for Breakdown)	
71		Ref	MAIN CONTROL VALVE, (See HYDRAULIC COMPONENTS SECTION for Breakdown)	
K1	8024045	1	STC HOSE CONNECTIONS SERVICE KIT, (includes items 62 thru 66)	

FIGURE 8-8. ATTACHMENT TILT AND AUXILIARY (644E SN 19386 through 20118, SN 0160002519 through 0160003108; 944E SN 19386 through 20123, SN 0160002514 through 0160003140)

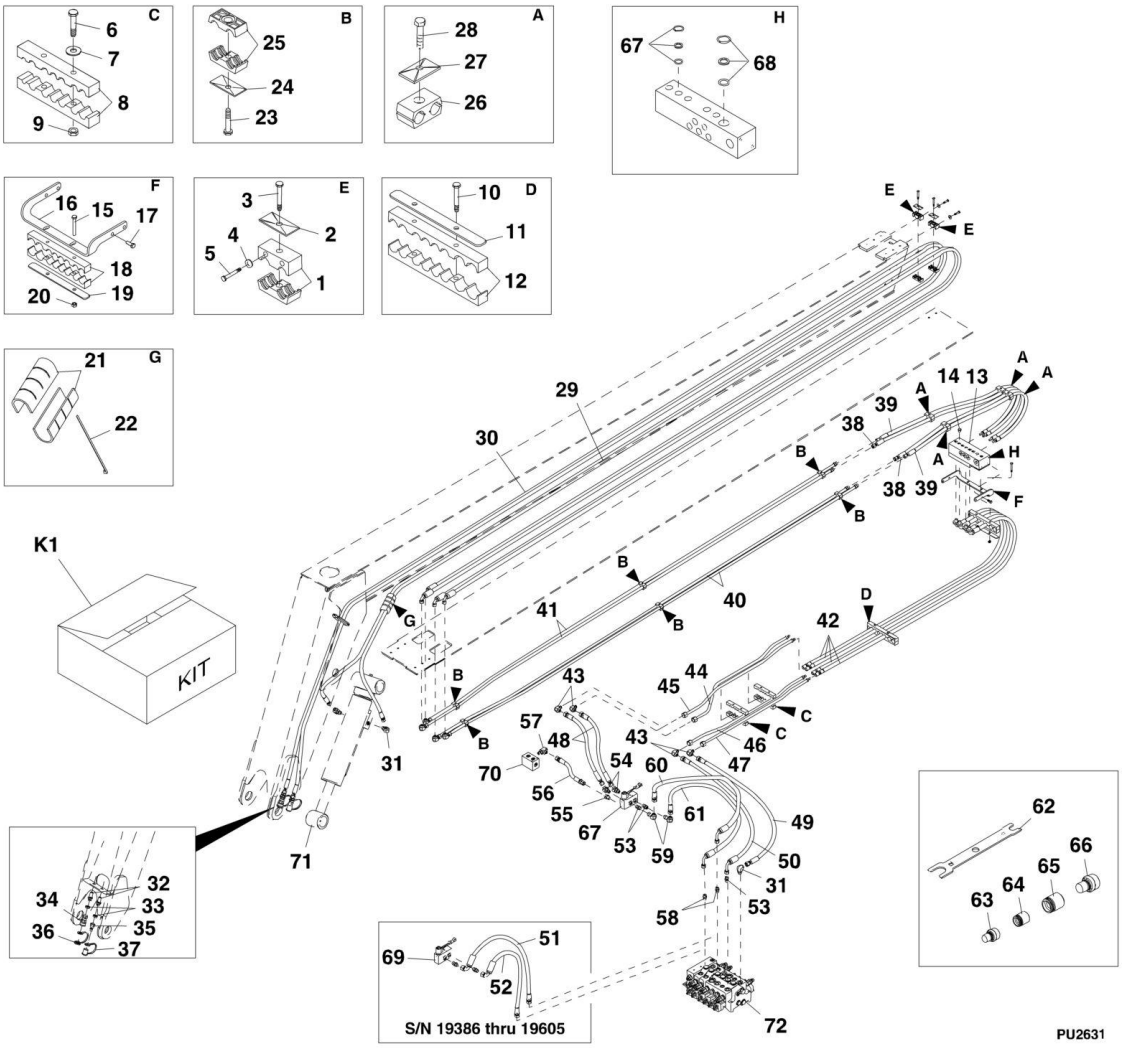

FIGURE 8-8. ATTACHMENT TILT AND AUXILIARY (644E SN 19386 through 20118, SN 0160002519 through 0160003108; 944E SN 19386 through 20123, SN 0160002514 through 0160003140)

ITEM	PART NUMBER	QTY	DESCRIPTION	REV
1	7300567	2	HOSE CLAMP	
2	8769123	2	TWIN COVER PLATE	
3	8310028	2	HEX HD CAPSCREW, M8X70, GR8.8	
4	8307109	4	PLAIN NARROW WASHER, .250	
5	8310703	4	HEX HD CAPSCREW, M6X45, GR8.8	
6	8303550	4	HEX HD CAPSCREW, M8X60, GR8.8	
7	8307204	4	PLAIN WIDE WASHER, 3/8	
8	7300750	2	CLAMP SET	
9	8305638	4	HEX LOCKNUT, M8-1.25	
10	8303550	2	HEX HD CAPSCREW, M8X60, GR8.8	
11	7300927	1	CLAMP COVER	
12	7300618	1	HOSE CLAMP	
13	7301072	1	HYDRAULIC JUNCTION MANIFOLD	
14	7301301	AR	PRESSURE BLEED PLUG, (6 Required on), (8 Required on) **(SN 17567 through 18632, SN 18633 to Present)**	
15	8310028	2	HEX HD CAPSCREW, M8X70, GR8.8	
16	7301154	1	HOSE CLAMP MOUNTING BRACKET	
17	8303783	4	HEX HD CAPSCREW, M8X25, GR8.8	
18	7300618	1	HOSE CLAMP	
19	7300927	1	CLAMP COVER	
20	8305043	2	NUT, M8-1.25	
21	7301536	2	HOSE GUARD	
22	8584003	2	TIE WRAP	
23	8310476	6	HEX HD CAPSCREW, M8X35, GR8.8	
24	8769123	6	TWIN COVER PLATE	
25	8769122	6	TWIN CLAMP SET, .625 DIA	
26	8750027	4	TWIN CLAMP SET, .84 DIA	
27	8769128	4	TWIN COVER PLATE	
28	8310293	4	HEX HD CAPSCREW, M8X50, GR8.8	
29	2717175	1	ATTACHMENT TILT TWINLINE HOSE	
30	2717176	1	AUXILIARY TWINLINE HOSE	
31	2130808	3	ELBOW, 90	
32	8770136	2	BULKHEAD CONNECTOR	
33	8770129	2	BULKHEAD NUT	
34	91403413	1	FEMALE QUICK-DISCONNECT COUPLER	
35	91403414	1	MALE QUICK-DISCONNECT NIPPLE	
36	8420055	1	DUST PLUG, FOR QUICK-DISCONNECT	
37	8420053	1	DUST CAP, FOR QUICK-DISCONNECT	
38	2717192	2	HOSE ASSEMBLY	
39	2717191	2	HOSE ASSEMBLY	
40	7301641	2	COMMON BOOM TUBE ASSEMBLY, (left side)	
41	7301642	2	COMMON BOOM TUBE ASSEMBLY, (right side)	
42	2716998	4	HOSE ASSEMBLY	
43	2172010	4	UNION ELBOW, 90	
44	7300742	1	TUBE ASSEMBLY	
45	7300743	1	TUBE ASSEMBLY	
46	7300745	1	TUBE ASSEMBLY	
47	7300746	1	TUBE ASSEMBLY	
48	2717134	2	HOSE ASSEMBLY	

ITEM	PART NUMBER	QTY	DESCRIPTION	REV
49	2717065	1	HOSE ASSEMBLY	
50	2717066	1	HOSE ASSEMBLY	
51	2717132	1	HOSE ASSEMBLY **(SN 19386 through 19605)**	
52	2717131	1	HOSE ASSEMBLY **(SN 19386 through 19605)**	
53	2110808	3	CONNECTOR	
54	8770127	2	ELBOW, 45	
55	2110606	1	ADAPTER	
56	2717133	1	HOSE ASSEMBLY	
57	2170306	1	RUN TEE	
58	8770117	2	CONNECTOR	
59	8770115	2	ELBOW, 90, (swivel nut)	
60	2717253	1	HOSE ASSEMBLY	
61	2717252	1	HOSE ASSEMBLY	
62	7301438	2	STC HOSES SERVICE TOOL, 8-12	
63	7301666	2	12 STC MALE PLUG	
64	7301667	2	12 STC FEMALE CAP	
65	7301663	6	8 STC FEMALE CAP	
66	7301662	6	STC MALE PLUG	
67	7020368	16	STC PORT REPAIR SERVICE KIT, (port size - 08), (includes retaining ring, back-up ring and o-ring)	
68	7020369	4	STC PORT REPAIR SERVICE KIT, (port size -12), (includes retaining ring, back-up ring and o-ring)	
69		Ref	AUX PRESS DUMP VALVE SOLENOID, (See HYDRAULIC COMPONENTS SECTION for Breakdown)	
70		Ref	MANIFOLD, (See SERVICE AND PARKING BRAKE for Breakdown)	
71		Ref	ATTACHMENT TILT CYLINDER, (See HYDRAULIC COMPONENTS SECTION for Breakdown)	
72		Ref	MAIN CONTROL VALVE, (See HYDRAULIC COMPONENTS SECTION for Breakdown)	
K1	8024045	1	STC HOSE CONNECTIONS SERVICE KIT, (includes items 62 thru 66)	

FIGURE 8-9. ATTACHMENT TILT AND AUXILIARY (644E SN 0160003109 to Present; 944E SN 0160003141 to Present)

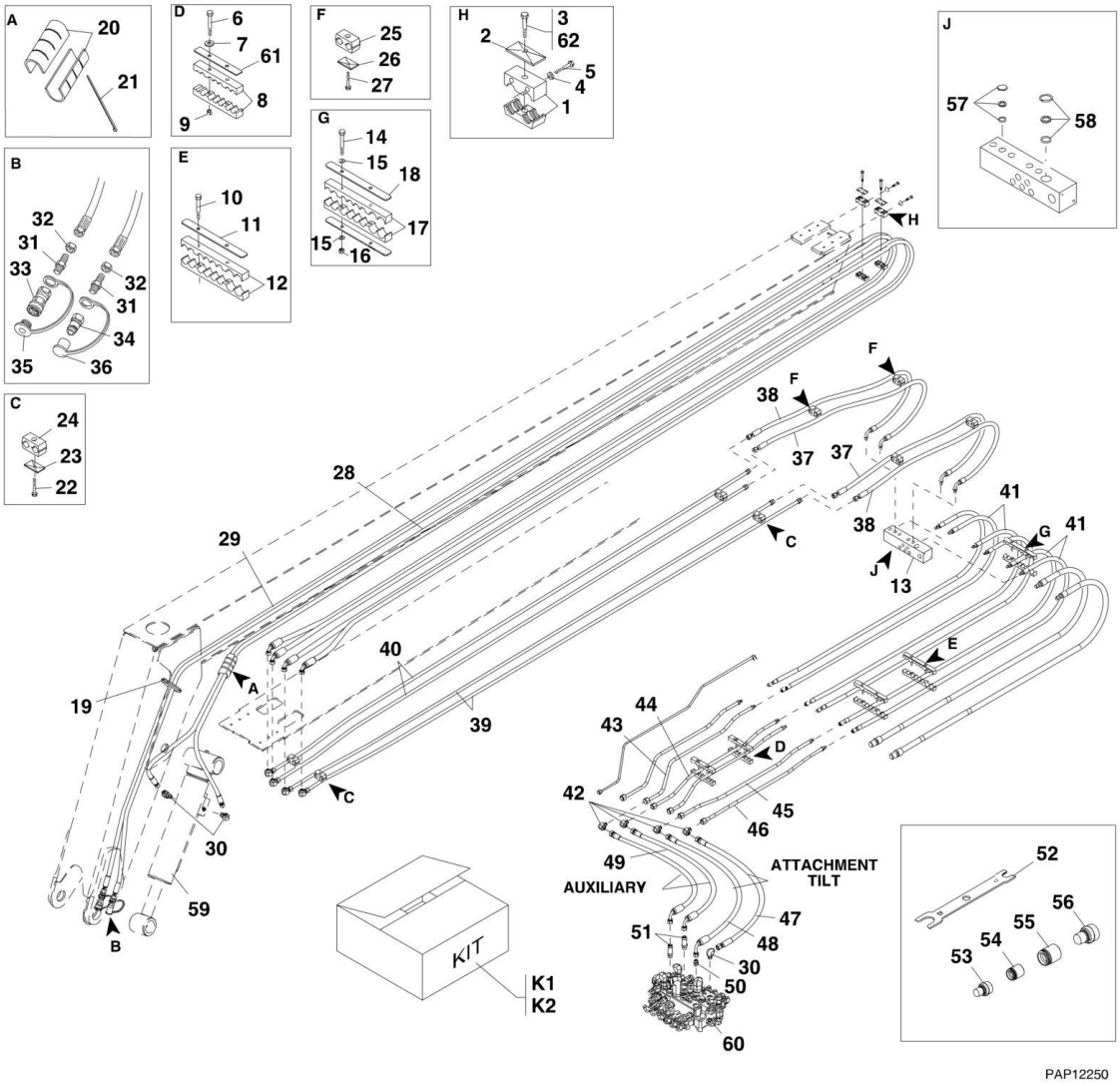

FIGURE 8-9. ATTACHMENT TILT AND AUXILIARY (644E SN 0160003109 to Present; 944E SN 0160003141 to Present)

ITEM	PART NUMBER	QTY	DESCRIPTION	REV
1	7300567	2	HOSE CLAMP	
2	8769123	2	TWIN COVER PLATE	
3	8310028	2	HEX HD CAPSCREW, M8X70, GR8.8	
4	8307109	4	PLAIN NARROW WASHER, .250	
5	8310703	4	HEX HD CAPSCREW, M6X45, GR8.8	
6	8303550	4	HEX HD CAPSCREW, M8X60, GR8.8	
7	8307204	4	PLAIN WIDE WASHER, 3/8	
8	7300750	2	CLAMP SET	
9	8305638	4	HEX LOCKNUT, M8-1.25	
10	8303528	4	HEX HD CAPSCREW, M8X65, GR8.8	
11	7300927	1	CLAMP COVER	
12	7300618	1	HOSE CLAMP	
13	7302032	1	HYDRAULIC JUNCTION MANIFOLD	
14	8310028	2	HEX HD CAPSCREW, M8X70, GR8.8	
15	8307222	4	PLAIN WASHER, 8mm	
16	8305043	2	NUT, M8X1.25	
17	7300618	1	HOSE CLAMP	
18	7300927	1	CLAMP COVER	
19	7125891	1	CONDUIT, .50X12 LG	
20	7301536	2	HOSE GUARD	
21	8584003	3	TIE WRAP	
22	8310476	6	HEX HD CAPSCREW, M8X35, GR8.8	
23	8769123	6	TWIN COVER PLATE	
24	8769122	6	TWIN CLAMP SET, .625 DIA	
25	8750027	4	TWIN CLAMP SET, .84 DIA	
26	8769128	4	TWIN COVER PLATE	
27	8310293	4	HEX HD CAPSCREW, M8X50, GR8.8	
28	2717175	1	ATTACHMENT TILT TWINLINE HOSE	
29	2717176	1	AUXILIARY TWINLINE HOSE	
30	2130808	3	ELBOW, 90	
31	8770136	2	BULKHEAD CONNECTOR	
32	8770129	2	BULKHEAD NUT	
33	91403413	1	FEMALE QUICK-DISCONNECT COUPLER	
34	91403414	1	MALE QUICK-DISCONNECT NIPPLE	
35	8420055	1	DUST PLUG, FOR QUICK-DISCONNECT	
36	8420053	1	DUST CAP, FOR QUICK-DISCONNECT	
37	2717276	2	HOSE ASSEMBLY	
38	2717275	2	HOSE ASSEMBLY	
39	7301641	2	COMMON BOOM TUBE ASSEMBLY, (left side)	
40	7301642	2	COMMON BOOM TUBE ASSEMBLY, (right side)	
41	2717265	4	HOSE ASSEMBLY	
42	2172010	4	UNION ELBOW, 90	
43	7300742	1	TUBE ASSEMBLY	
44	7300743	1	TUBE ASSEMBLY	
45	7300745	1	TUBE ASSEMBLY	
46	7300746	1	TUBE ASSEMBLY	
47	2717065	1	HOSE ASSEMBLY	
48	2717066	1	HOSE ASSEMBLY	
49	2717063	2	HOSE ASSEMBLY	

ITEM	PART NUMBER	QTY	DESCRIPTION	REV
50	2110808	1	CONNECTOR	
51	2170108	2	CONNECTOR	
52	7301438	2	STC HOSES SERVICE TOOL, 8-12	
53	7301666	2	12 STC MALE PLUG	
54	7301667	2	12 STC FEMALE CAP	
55	7301663	6	8 STC FEMALE CAP	
56	7301662	6	8 STC MALE PLUG	
57	7020368	16	STC PORT REPAIR SERVICE KIT, (port size - 08), (includes retaining ring, back-up ring and o-ring)	
58	7020369	4	STC PORT REPAIR SERVICE KIT, (port size -12), (includes retaining ring, back-up ring and o-ring)	
59		Ref	ATTACHMENT TILT CYLINDER, (See HYDRAULIC COMPONENTS SECTION for Breakdown)	
60		Ref	MAIN CONTROL VALVE	
61	1321733	2	CLAMP COVER PLATE, (644E 944E) **(SN 0160028387 to Present, SN 0160028385 to Present)**	
62	8526007	AR	LOCTITE 242, (apply to item 3)	
K1	8024045	1	STC HOSE CONNECTIONS SERVICE KIT, (includes items 52 thru 56)	
K2	7302113	1	BOOM CONNECT HOSE KIT, (includes items 37, 38 and items 16, 18 on EXTEND/RETRACT AND LIFT LOWER)	

FIGURE 8-10. FRAME LEVEL/STABIL-TRAK (SN 17569 through 18460)

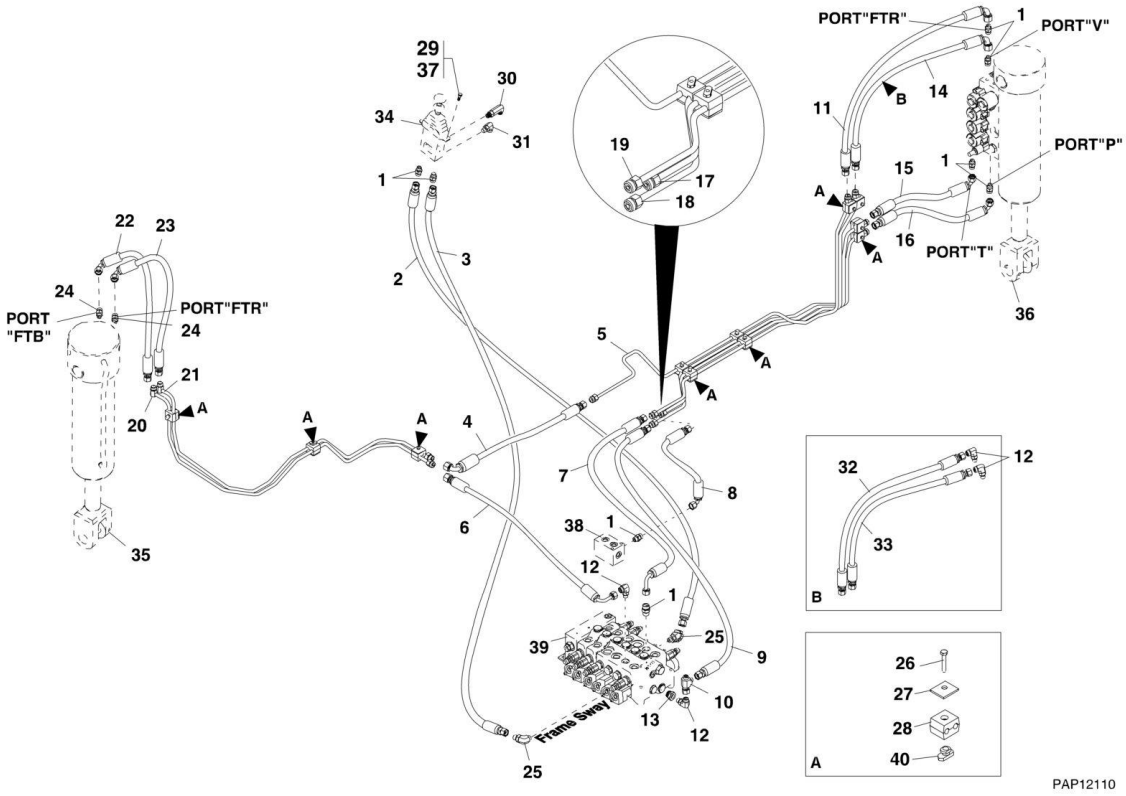

FIGURE 8-10. FRAME LEVEL/STABIL-TRAK (SN 17569 through 18460)

ITEM	PART NUMBER	QTY	DESCRIPTION	REV
1	2110606	8	ADAPTER	
2	2716963	1	HOSE ASSEMBLY	
3	2716966	1	HOSE ASSEMBLY	
4	2717060	1	HOSE ASSEMBLY	
5	7300499	1	HOSE ASSEMBLY	
6	2716950	1	HOSE ASSEMBLY	
7	2717058	1	HOSE ASSEMBLY	
8	2717059	1	HOSE ASSEMBLY	
9	2717057	1	HOSE ASSEMBLY	
10	8770111	1	SWIVEL RUN TEE	
11	2717070	1	HOSE ASSEMBLY	
12	2130606	2	ELBOW, 90	
13	2220218	1	REDUCER/EXPANDER, #10-6	
14	2717169	1	HOSE ASSEMBLY	
15	2717172	1	HOSE ASSEMBLY	
16	2717171	1	HOSE ASSEMBLY	
17	7300467	1	TUBE ASSEMBLY	
18	7300468	1	TUBE ASSEMBLY	
19	7300469	1	TUBE ASSEMBLY	
20	7300949	1	TUBE ASSEMBLY	
21	7300948	1	TUBE ASSEMBLY	
22	2717173	1	HOSE ASSEMBLY	
23	2717000	1	HOSE ASSEMBLY	
24	8902862	2	CHECK VALVE, .054	
25	8770140	2	ELBOW, 45	
26	8303541	11	HEX HD CAPSCREW, M6X35, GR8.8	
27	8750020	11	TWIN COVER PLATE	
28	8750018	11	TWIN CLAMP SET, .375	
29	8303544	2	HEX HD CAPSCREW, M6X20, GR8.8	
30	8770154	1	ELBOW, 90	
31	2130606	1	ELBOW, 90	
32		Ref	HOSE ASSEMBLY, (order items 11 & 1)	
33		Ref	HOSE ASSEMBLY, (order items 14 & 1)	
34		Ref	FRAME LEVEL CONTROLLER, (See CONTROL SECTION for Breakdown)	
35		Ref	FRAME LEVEL CYLINDER, (See HYDRAULIC COMPONENTS SECTION for Breakdown)	
36		Ref	STABIL-TRAK CYLINDER, (See HYDRAULIC COMPONENTS SECTION for Breakdown)	
37	8526007	AR	LOCTITE 242, (apply to item 29)	
38		Ref	MANIFOLD, (See PUMP, SUCTION AND RETURN for Breakdown)	
39		Ref	MAIN CONTROL VALVE, (See HYDRAULIC COMPONENTS SECTION for Breakdown)	
40	8750044	11	RAIL NUT, M6	

FIGURE 8-11. FRAME LEVEL/STABIL-TRAK (SN 18461 through 20118, SN 0160002519 to Present)

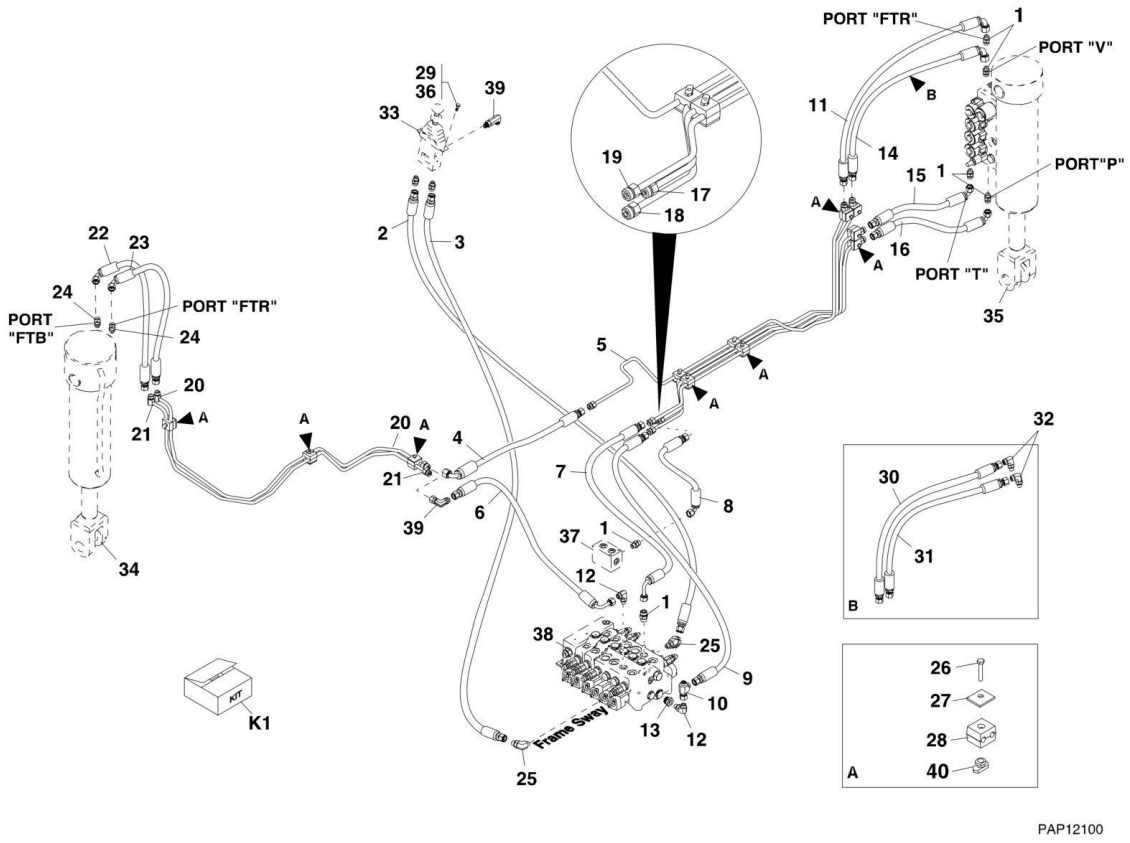

FIGURE 8-11. FRAME LEVEL/STABIL-TRAK (SN 18461 through 20118, SN 0160002519 to Present)

ITEM	PART NUMBER	QTY	DESCRIPTION	REV
1	2110606	6	ADAPTER	
2	2716963	1	HOSE ASSEMBLY	
3	2716966	1	HOSE ASSEMBLY	
4	2717060	1	HOSE ASSEMBLY	
5	7300499	1	TUBE ASSEMBLY	
6	2716950	1	HOSE ASSEMBLY	
7	2717058	1	HOSE ASSEMBLY	
8	2717059	1	HOSE ASSEMBLY	
9	2717057	1	HOSE ASSEMBLY	
10	2170706	1	SWIVEL RUN TEE	
11	2717170	1	HOSE ASSEMBLY	
12	2130606	2	ELBOW, 90	
13	2220218	1	REDUCER/EXPANDER, #10-6	
14	2717169	1	HOSE ASSEMBLY	
15	2717172	1	HOSE ASSEMBLY	
16	2717171	1	HOSE ASSEMBLY	
17	7300467	1	TUBE ASSEMBLY	
18	7300468	1	TUBE ASSEMBLY	
19	7300469	1	TUBE ASSEMBLY	
20	7300949	1	TUBE ASSEMBLY	
21	7300948	1	TUBE ASSEMBLY	
22	2717173	1	HOSE ASSEMBLY	
23	2717000	1	HOSE ASSEMBLY	
24	8902862	2	CHECK VALVE, .054	
25	2150606	2	ELBOW, 45	
26	8303541	11	HEX HD CAPSCREW, M6X35, GR8.8	
27	8750020	11	TWIN COVER PLATE	
28	8750018	11	TWIN CLAMP SET, .375	
29	8303544	2	HEX HD CAPSCREW, M6X20, GR8.8	
30		Ref	HOSE ASSEMBLY, (not available to order, use items 1 & 11 for replacement)	
31		Ref	HOSE ASSEMBLY, (not available to order, use items 1 & 14 for replacement)	
32	8770105	2	ELBOW, 90, (swivel nut)	
33		Ref	FRAME LEVEL CONTROLLER, (See CONTROLS SECTION for Breakdown)	
34		Ref	FRAME LEVEL CYLINDER, (See HYDRAULIC COMPONENTS SECTION for Breakdown)	
35		Ref	STABIL-TRAK CYLINDER, (See HYDRAULIC COMPONENTS SECTION for Breakdown)	
36	8526007	AR	LOCTITE 242, (apply to item 29)	
37		Ref	MANIFOLD, (See EXTEND/RETRACT AND LIFT LOWER for Breakdown)	
38		Ref	MAIN CONTROL VALVE, (See HYDRAULIC COMPONENTS SECTION for Breakdown)	
39	2172106	2	ELBOW, 90, (includes o-ring)	
40	8750044	3	RAIL NUT, M6	
K1	7301745	1	FRAME TILT/STABILITY CYLINDER HOSE KIT, (includes items 4, 11, 14, 15, 16, 22 & 23)	

FIGURE 8-12. TILT COMPENSATION CYLINDER (644E SN 17569 through 20118, SN 0160002519 through 0160003583, SN 0160002514 through 0160003587; 944E SN 18554 through 20123)

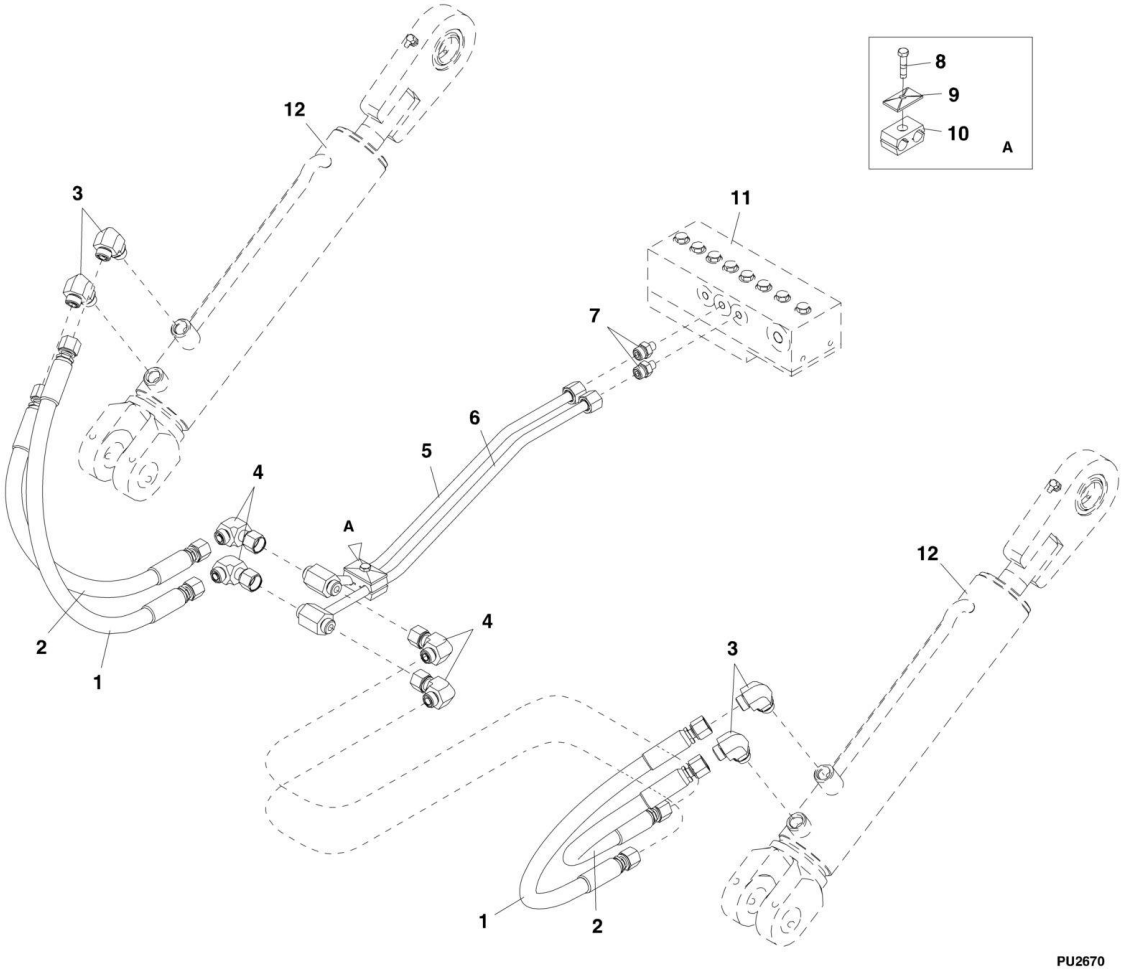

FIGURE 8-12. TILT COMPENSATION CYLINDER (644E SN 17569 through 20118, SN 0160002519 through 0160003583, SN 0160002514 through 0160003587; 944E SN 18554 through 20123)

ITEM	PART NUMBER	QTY	DESCRIPTION	REV
1	2716980	2	HYDRAULIC HOSE	
2	2716981	2	HYDRAULIC HOSE	
3	2130808	4	ELBOW, 90	
4	8770115	4	ELBOW, 90, (swivel nut)	
5	7300586	1	HYDRAULIC TUBE	
6	7300587	1	HYDRAULIC TUBE	
7	2110808	2	CONNECTOR	
8	8303611	1	HEX HD CAPSCREW, M8X30, GR8.8	
9	8769128	1	TWIN COVER PLATE	
10	8769126	1	TWIN CLAMP SET, .500 DIA	
11		Ref	HYDRAULIC JUNCTION MANIFOLD, (See ATTACHMENT TILT AND AUXILIARY for Breakdown)	
12		Ref	TILT COMPENSATION CYLINDER, (See HYDRAULIC COMPONENTS SECTION for Breakdown)	

FIGURE 8-13. TILT COMPENSATION CYLINDER (644E SN 0160003604 to Present; 944E SN 0160003602 to Present)

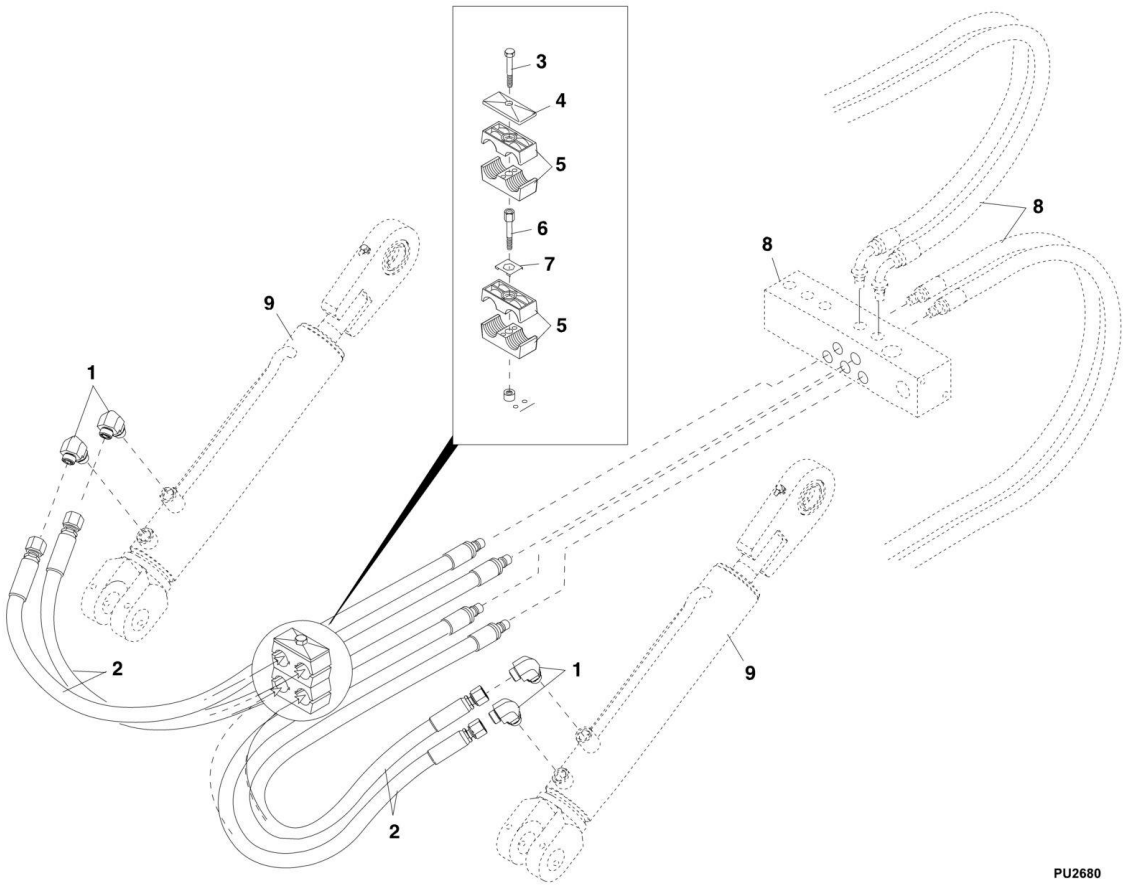

FIGURE 8-13. TILT COMPENSATION CYLINDER (644E SN 0160003604 to Present; 944E SN 0160003602 to Present)

ITEM	PART NUMBER	QTY	DESCRIPTION	REV
1	2130808	4	ELBOW, 90	
2	2717272	4	HOSE ASSEMBLY	
3	8310009	1	HEX HD CAPSCREW, .312-18X2.00, GR5	
4	8769128	1	TWIN COVER PLATE	
5	8750027	2	TWIN CLAMP SET, .84 DIA	
6	8750038	1	STACKING BOLT	
7	8750017	1	TWIN CLAMP LOCKING PLATE	
8		Ref	HYDRAULIC JUNCTION MANIFOLD, (See ATTACHMENT TILT AND AUXILIARY for Breakdown)	
9		Ref	TILT COMPENSATION CYLINDER, (See HYDRAULIC COMPONENTS SECTION for Breakdown)	

FIGURE 8-14. TRANSFER CARRIAGE

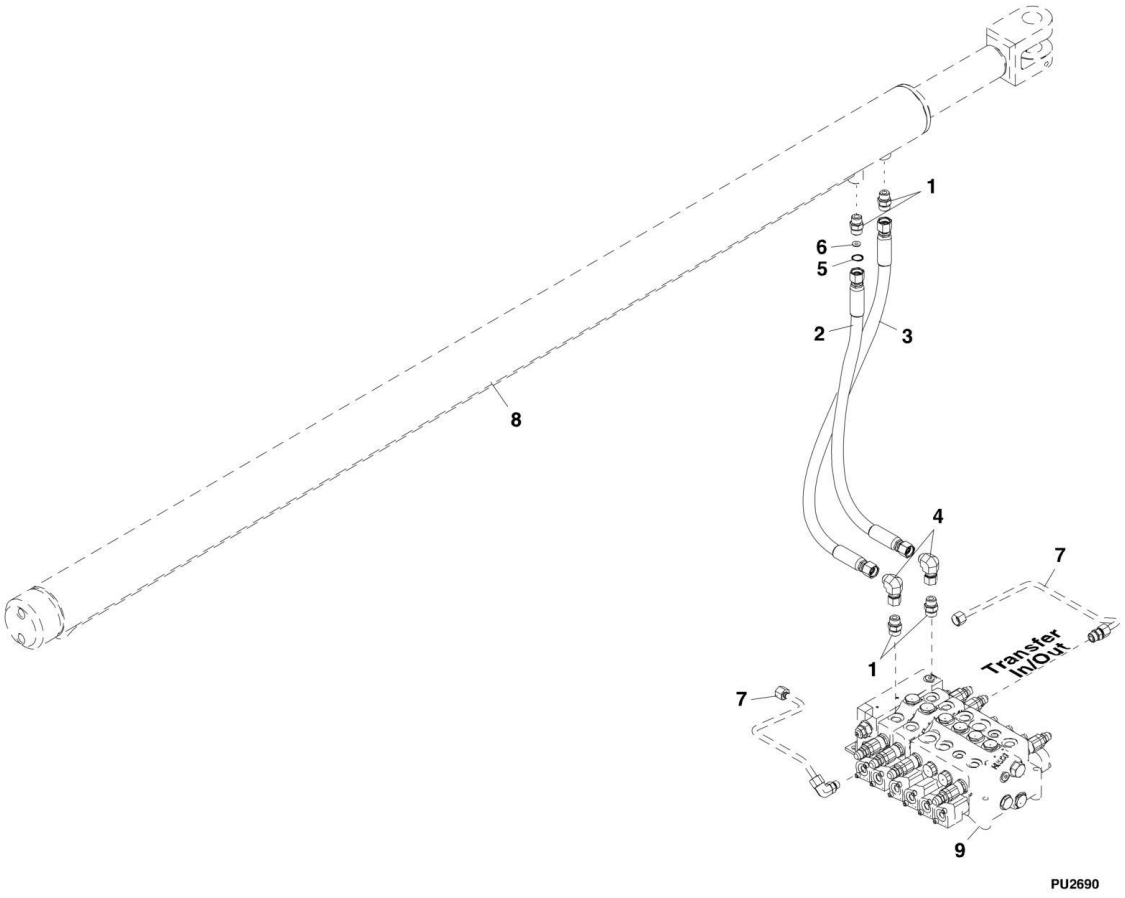

FIGURE 8-14. TRANSFER CARRIAGE

ITEM	PART NUMBER	QTY	DESCRIPTION	REV
1	2110808	4	CONNECTOR	
2	2716920	1	HOSE ASSEMBLY	
3	2716921	1	HOSE ASSEMBLY	
4	2172108	2	ELBOW, 90, (swivel nut)	
5	8630004	1	FLAT FACE O-RING	
6	7301538	1	ORIFICE DISK	
7		Ref	TUBE ASSEMBLY, (See FRONT JOYSTICK for Breakdown)	
8		Ref	TRANSFER CYLINDER, (See HYDRAULIC COMPONENT SECTION for Breakdown)	
9		Ref	MAIN CONTROL VALVE, (See HYDRAULIC COMPONENT SECTION for Breakdown)	

FIGURE 8-15. STEERING CYLINDER

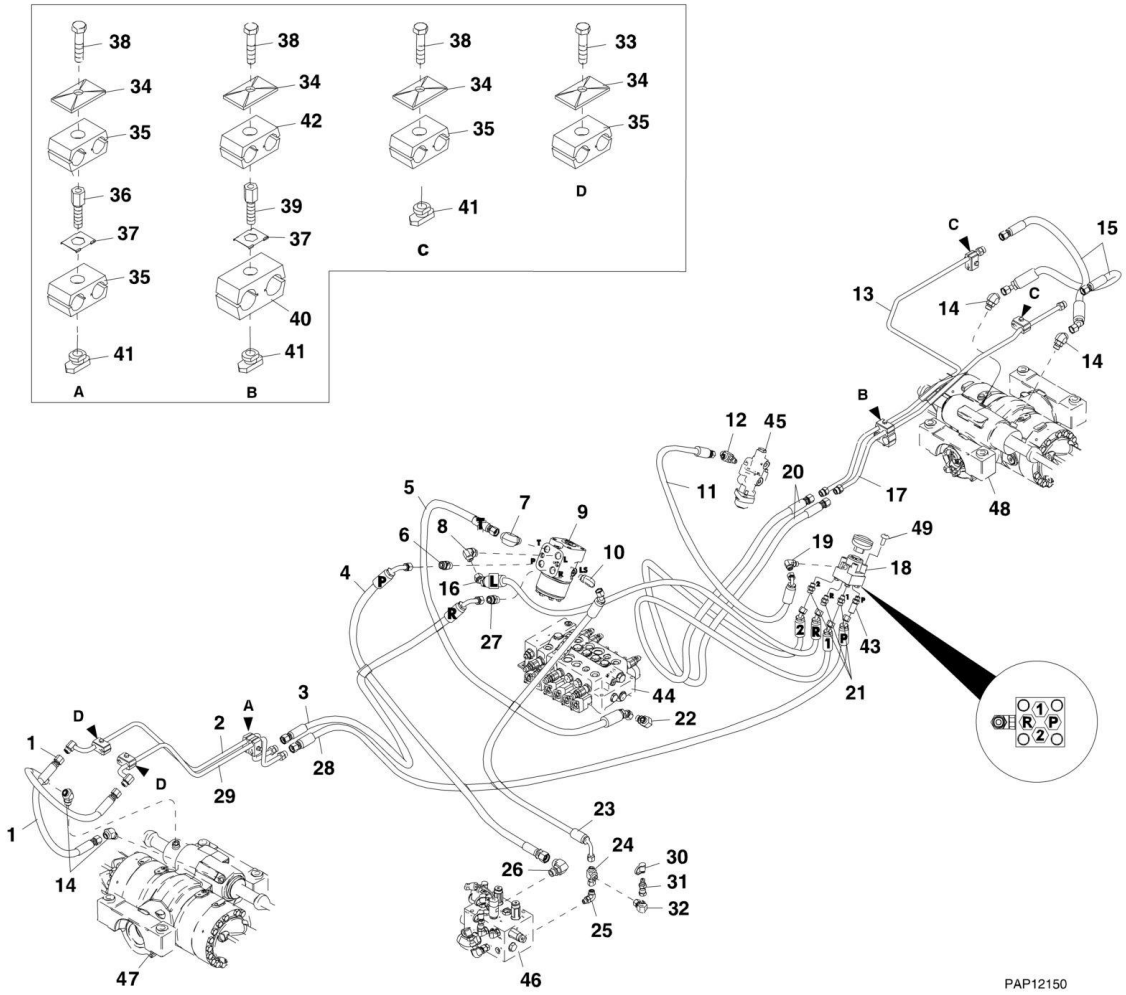

FIGURE 8-15. STEERING CYLINDER

ITEM	PART NUMBER	QTY	DESCRIPTION	REV
1	2716925	2	HOSE ASSEMBLY **(644E Prior to SN 0160039830, Excluding 0160036724, 0160036811, 0160036907 and 0160037012; 944E Prior to SN 0160040124, Excluding 0160034634, 0160036710, 0160036722, 0160036735 and 0160036738)**	
1	2716629	2	HOSE ASSEMBLY **(644E SN 0160039830 to Present, Including 0160040124, 0160036811, 0160036907 and 0160037012; 944E SN 0160036724 to Present, Including 0160034634, 0160036710, 0160036722, 0160036735 and 0160036738)**	
2	7300946	1	FRONT AXLE TUBE ASSEMBLY, (left steer) **(644E Prior to SN 0160045421, Excluding 0160045421; 944E Prior to SN 0160041827)**	
2	1001121113	1	FRONT AXLE TUBE ASSEMBLY, (left steer) **(644E SN 0160048717 to Present, Including 0160045421; 944E SN 0160041827 to Present)**	
3	2717040	1	HOSE ASSEMBLY	
4	2716954	1	HOSE ASSEMBLY	
5	2716953	1	HOSE ASSEMBLY	
6	8770131	1	CONNECTOR WITH INLET CHECK	
7	2130808	1	ELBOW, 90	
8	2130608	1	ELBOW, 90	
9	8721032	1	STEER ORIBTAL VALVE, SINGLE STAGE 19CIR	
10	2130604	1	ELBOW, 90	
11	2716927	1	HOSE ASSEMBLY	
12	2170306	1	RUN TEE	
13	7300739	1	TUBE ASSEMBLY, (right steer)	
14	2150808	4	ELBOW, 45	
15	2716928	2	HOSE ASSEMBLY	
16	2716956	1	HOSE ASSEMBLY	
17	7300740	1	TUBE ASSEMBLY, (left steer)	
18	8902310	1	STEER SELECT VALVE	
18	70024325	1	KNOB, STEER SELECT VALVE	
19	2130606	1	ELBOW, 90	
20	2716955	2	HOSE ASSEMBLY	
21	2110606	3	ADAPTER	
22	2130808	1	ELBOW, 90	
23	2717039	1	HOSE ASSEMBLY	
24	2170706	1	SWIVEL RUN TEE	
25	2130606	1	ELBOW, 90	
26	2130810	1	ELBOW, 90	
27	2110808	1	CONNECTOR	
28	2716957	1	HOSE ASSEMBLY	
29	7300944	1	FRONT AXLE TUBE ASSEMBLY, (right steer) **(644E Prior to SN 0160048747, Excluding 0160045421; 944E SN 0160041827 to Present)**	
29	1001121071	1	FRONT AXLE TUBE ASSEMBLY, (right steer) **(644E SN 0160048717 to Present, Including 0160045421; 944E SN 0160041827 to Present)**	
30	8430098	1	DUST PLUG	
31	8430081	1	DIAGNOSTIC ADAPTER	
32	2172106	1	ELBOW, 90, (swivel nut)	
33	8310293	4	HEX HD CAPSCREW, M8X50, GR8.8	
34	8769123	7	TWIN COVER PLATE	
35	8750042	6	TWIN CLAMP SET, 0.50/0.38	

ITEM	PART NUMBER	QTY	DESCRIPTION	REV
36	8750037	1	STACKING BOLT	
37	8750017	3	LOCKING PLATE	
38	8310476	5	HEX HD CAPSCREW, M8X35, GR8.8	
39	8750038	2	STACKING BOLT	
40	8769127	2	TWIN CLAMP SET, 1.00 DIA	
41	8750043	5	RAIL NUT, M8	
42	8769126	2	TWIN CLAMP SET, 0.50 DIA	
43	2170106	1	CONNECTOR	
44		Ref	MAIN CONTROL VALVE, (See HYDRAULIC COMPONENTS SECTION for Breakdown)	
45		Ref	BRAKE VALVE, (See SERVICE AND PARKING BRAKE for Breakdown)	
46		Ref	ACCUMULATOR CHARGE VALVE, (See HYDRAULIC COMPONENTS SECTION for Breakdown)	
47		Ref	FRONT AXLE, (See DRIVE TRAIN SECTION for Breakdown)	
48		Ref	REAR AXLE, (See DRIVE TRAIN SECTION for Breakdown)	
49	8310518	4	BUTTON HD CAPSCREW, 3/8-16X7/8, GR5	

FIGURE 8-16. FRONT JOYSTICK

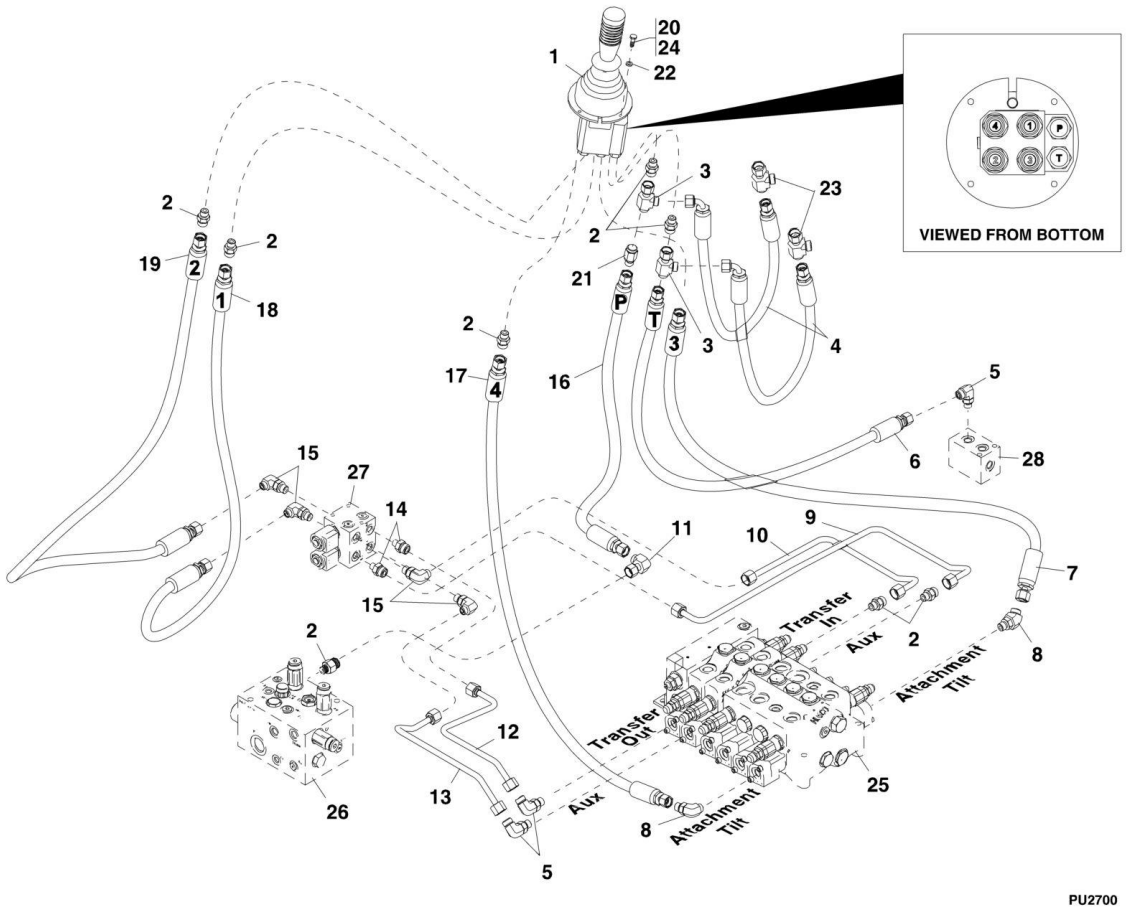

FIGURE 8-16. FRONT JOYSTICK

ITEM	PART NUMBER	QTY	DESCRIPTION	REV
1		Ref	JOYSTICK CONTROL VALVE ASSY, (See CONTROLS SECTION for Breakdown)	
2	2110606	9	ADAPTER	
3	8770111	2	SWIVEL RUN TEE	
4	2716967	2	HOSE ASSEMBLY	
5	2130606	3	ELBOW, 90	
6	2716961	1	HOSE ASSEMBLY	
7	2716964	1	HOSE ASSEMBLY	
8	8770140	2	ELBOW, 45	
9	7301005	1	TUBE ASSEMBLY	
10	7301004	1	TUBE ASSEMBLY	
11	2172106	1	ELBOW, 90, (swivel nut)	
12	7301002	1	TUBE ASSEMBLY	
13	7301003	1	TUBE ASSEMBLY	
14	2110604	2	CONNECTOR	
15	2130604	4	ELBOW, 90	
16	2716960	1	HOSE ASSEMBLY	
17	2716965	1	HOSE ASSEMBLY	
18	2716962	1	HOSE ASSEMBLY	
19	2716963	1	HOSE ASSEMBLY	
20	8303544	4	HEX HD CAPSCREW, M6-1.00X20mm, PC8.8	
21	4641316	1	CHECK VALVE	
22	8307219	4	PLAIN WASHER, 6mm	
23		Ref	SWIVEL RUN TEE, (See REAR JOYSTICK for Breakdown)	
24	8526007	AR	LOCTITE 242, (apply to item 20)	
25		Ref	MAIN CONTROL VALVE, (See HYDRAULIC COMPONENTS SECTION for Breakdown)	
26		Ref	ACCUMULATOR CHARGE VALVE, (See HYDRAULIC COMPONENTS SECTION for Breakdown)	
27		Ref	PILOT SELECT VALVE, (See HYDRAULIC COMPONENTS SECTION for Breakdown)	
28		Ref	MANIFOLD, (See SERVICE AND BRAKE for Breakdown)	

FIGURE 8-17. REAR JOYSTICK (SN 17569 through 18460)

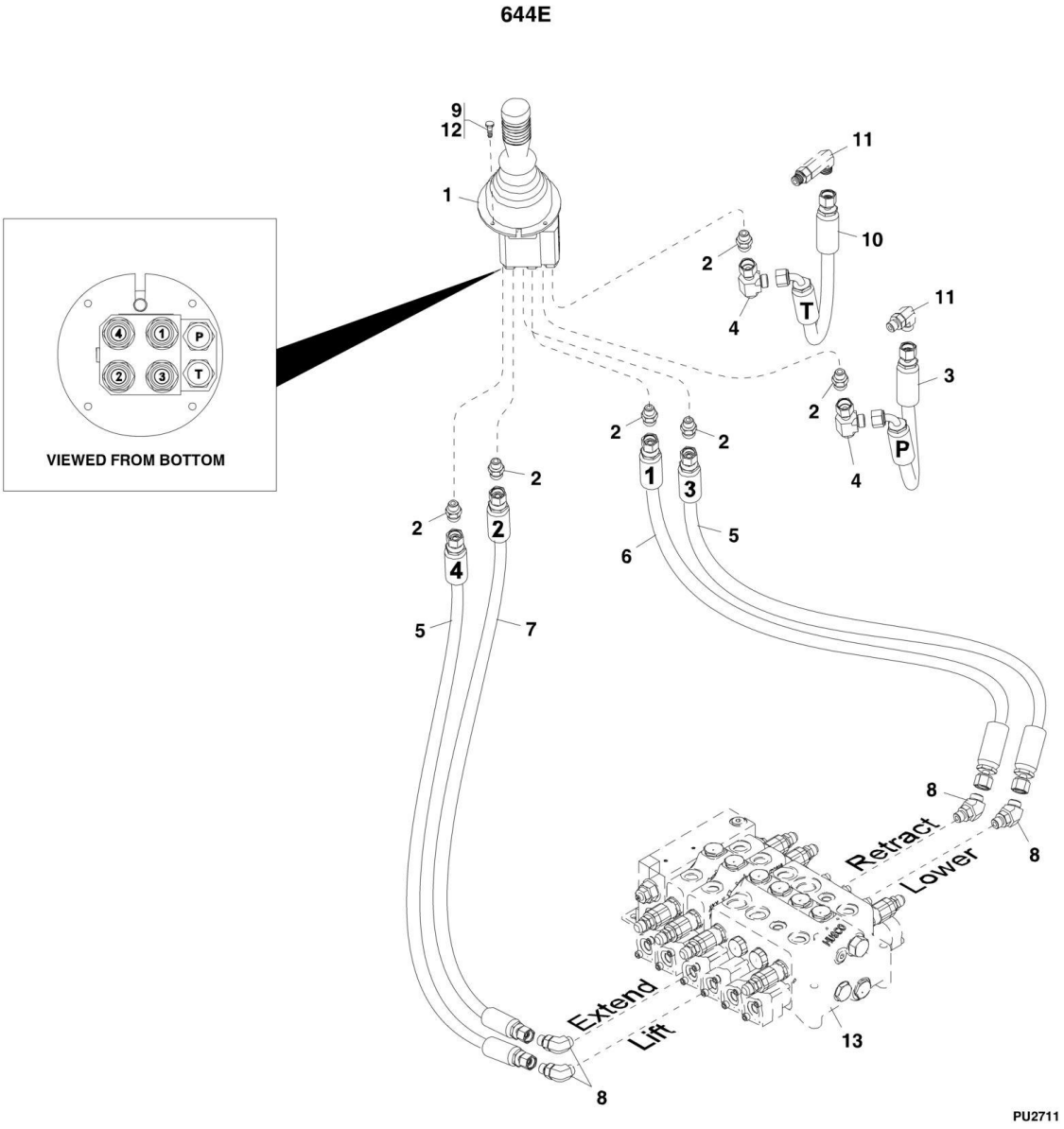

FIGURE 8-17. REAR JOYSTICK (SN 17569 through 18460)

ITEM	PART NUMBER	QTY	DESCRIPTION	REV
1		Ref	JOYSTICK CONTROL VALVE ASSEMBLY, (See CONTROLS SECTION for Breakdown)	
2	2110606	6	ADAPTER	
3	2716968	1	HOSE ASSEMBLY	
4	8770111	2	SWIVEL RUN TEE	
5	2716963	2	HOSE ASSEMBLY	
6	2716960	1	HOSE ASSEMBLY	
7	2716962	1	HOSE ASSEMBLY	
8	8770140	4	ELBOW, 45	
9	8303544	4	HEX HD CAPSCREW, M6X20, GR8.8	
10	2716969	1	HOSE ASSEMBLY	
11		Ref	ELBOW, 90, (See FRAME LEVEL/STABIL-TRAK for Breakdown)	
12	8526007	AR	LOCTITE 242, (apply to item 9)	
13		Ref	MAIN CONTROL VALVE, (See HYDRAULIC COMPONENTS SECTION for Breakdown)	

FIGURE 8-18. REAR JOYSTICK (644E SN 18461 through 20123, SN 0160002514 to Present; 944E SN 18554 through 20123, SN 0160002514 to Present)

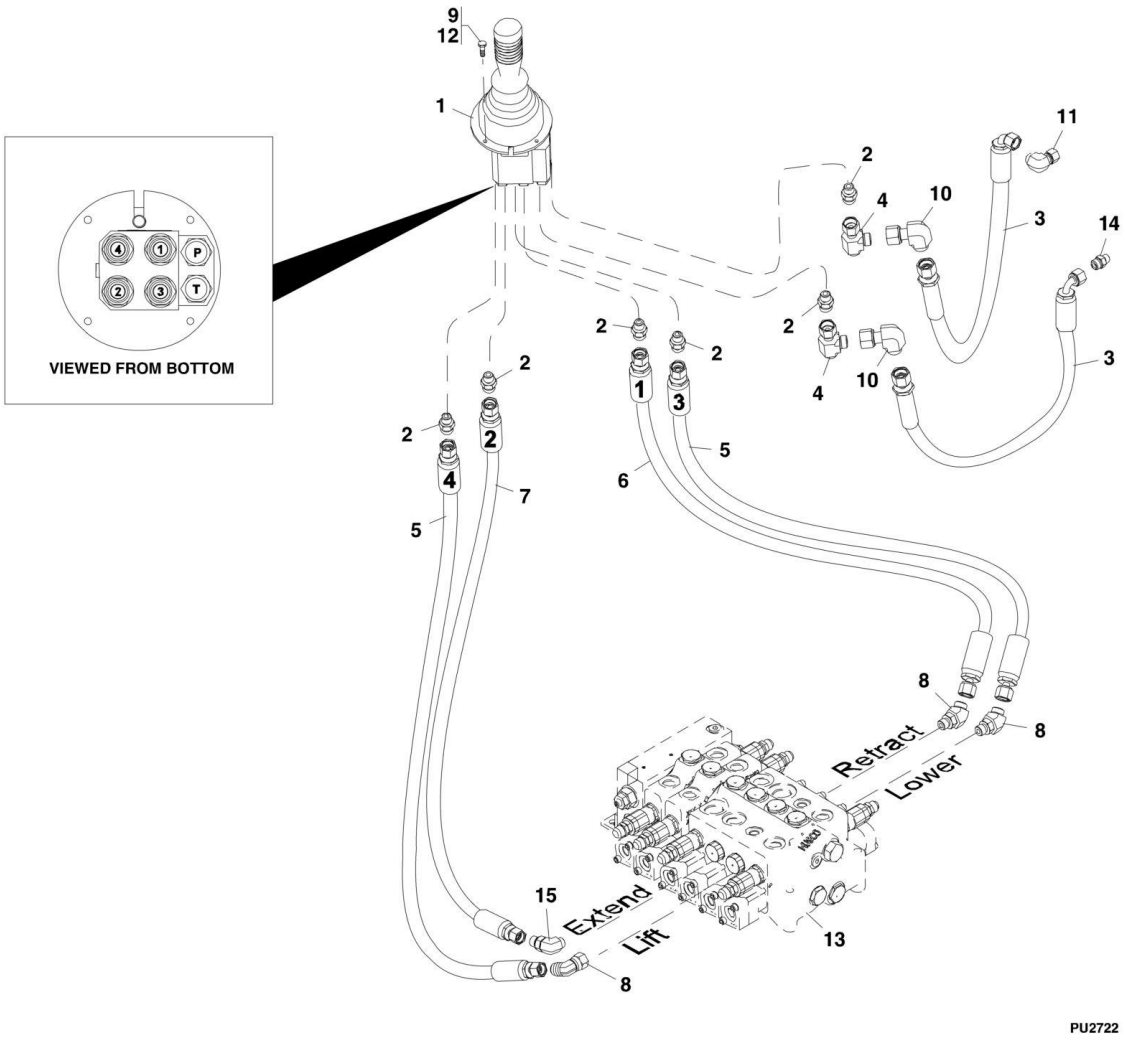

FIGURE 8-18. REAR JOYSTICK (644E SN 18461 through 20123, SN 0160002514 to Present; 944E SN 18554 through 20123, SN 0160002514 to Present)

ITEM	PART NUMBER	QTY	DESCRIPTION	REV
1		Ref	JOYSTICK CONTROL VALVE ASSEMBLY, (See CONTROLS SECTION for Breakdown)	
2	2110606	6	ADAPTER	
3	2716968	2	HOSE ASSEMBLY	
4	2170706	2	SWIVEL RUN TEE	
5	2716963	2	HOSE ASSEMBLY	
6	2716960	1	HOSE ASSEMBLY	
7	2716962	1	HOSE ASSEMBLY	
8	2150606	3	ELBOW, 45	
9	8303544	4	HEX HD CAPSCREW, M6X20, GR8.8	
10	2172106	2	ELBOW, 90, (swivel nut)	
11		Ref	ELBOW, 90, (See FRAME LEVEL/STABIL-TRAK for Breakdown)	
12	8526007	AR	LOCTITE 242, (apply to item 9)	
13		Ref	MAIN CONTROL VALVE, (See HYDRAULIC COMPONENTS SECTION for Breakdown)	
14		Ref	CONNECTOR, (See CONTROLS SECTION for Breakdown)	
15	2130606	1	ELBOW, 90	

FIGURE 8-19. SINGLE JOYSTICK

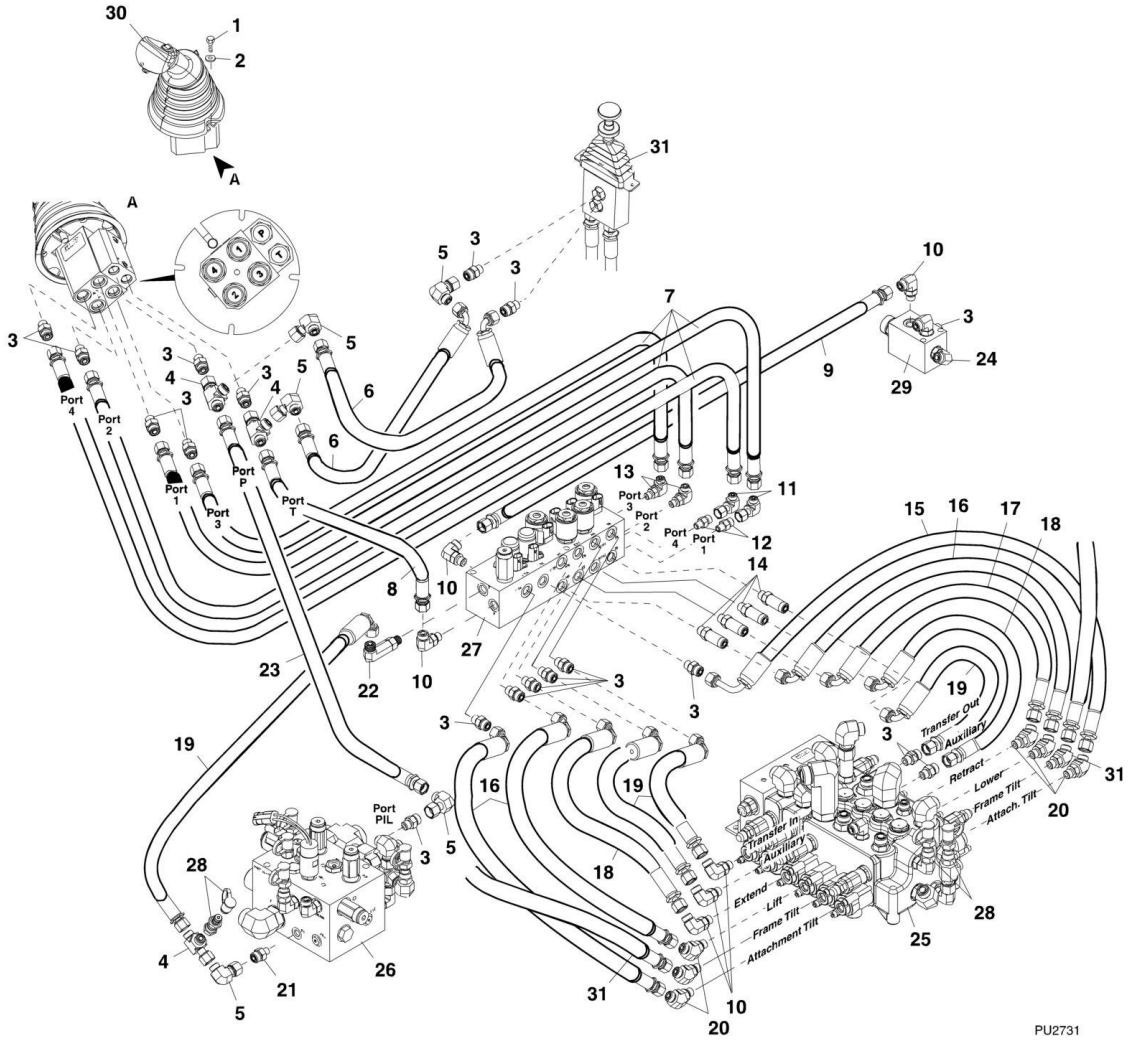

FIGURE 8-19. SINGLE JOYSTICK

ITEM	PART NUMBER	QTY	DESCRIPTION	REV
1	8303607	4	HEX HD CAPSCREW, M6X25, GR8.8	
2	8307219	4	PLAIN WASHER, M6	
3	2110606	18	ADAPTER	
4	2170706	3	SWIVEL RUN TEE	
5	2172106	5	ELBOW, 90, (swivel nut)	
6	2717184	2	HOSE ASSEMBLY	
7	2717209	4	HOSE ASSEMBLY	
8	2717180	1	HOSE ASSEMBLY	
9	2717084	1	HOSE ASSEMBLY	
10	2130606	6	ELBOW, 90	
11	2172104	2	ELBOW, 90, (swivel nut)	
12	2110404	2	CONNECTOR	
13	2130404	2	ELBOW, 90	
14	2170106	4	CONNECTOR	
15	2717190	1	HOSE ASSEMBLY	
16	2717189	3	HOSE ASSEMBLY	
17	2717188	1	HOSE ASSEMBLY	
18	2717187	2	HOSE ASSEMBLY	
19	2717186	4	HOSE ASSEMBLY	
20	2150606	6	ELBOW, 45	
21	2110604	1	CONNECTOR	
22	2170206	1	ELBOW, 90	
23	2717178	1	HOSE ASSEMBLY	
24		Ref	ELBOW, 90, (See PUMP SUCTION AND RETURN for Breakdown)	
25		Ref	MAIN CONTROL VALVE, (See HYDRAULIC COMPONENTS SECTION for Breakdown)	
26		Ref	ACCUMULATOR CHARGE VALVE, (See HYDRAULIC COMPONENTS SECTION for Breakdown)	
27		Ref	PILOT SELECT VALVE, (See HYDRAULIC COMPONENTS SECTION for Breakdown)	
28		Ref	DIAGNOSTIC PRESSURE TAP, (See HYDRAULIC COMPONENTS SECTION for Breakdown)	
29		Ref	MANIFOLD, (See SERVICE AND BRAKE for Breakdown)	
30		Ref	JOYSTICK CONTROL , (See CONTROLS SECTION for Breakdown)	
31		Ref	FRAME LEVEL CONTROL VALVE, (See CONTROLS SECTION for Breakdown)	

FIGURE 8-20. TRANSMISSION OIL COOLER ASSEMBLY (644E Prior to SN 0160048717, Excluding 01600045421; 944E Prior to SN 0160041827)

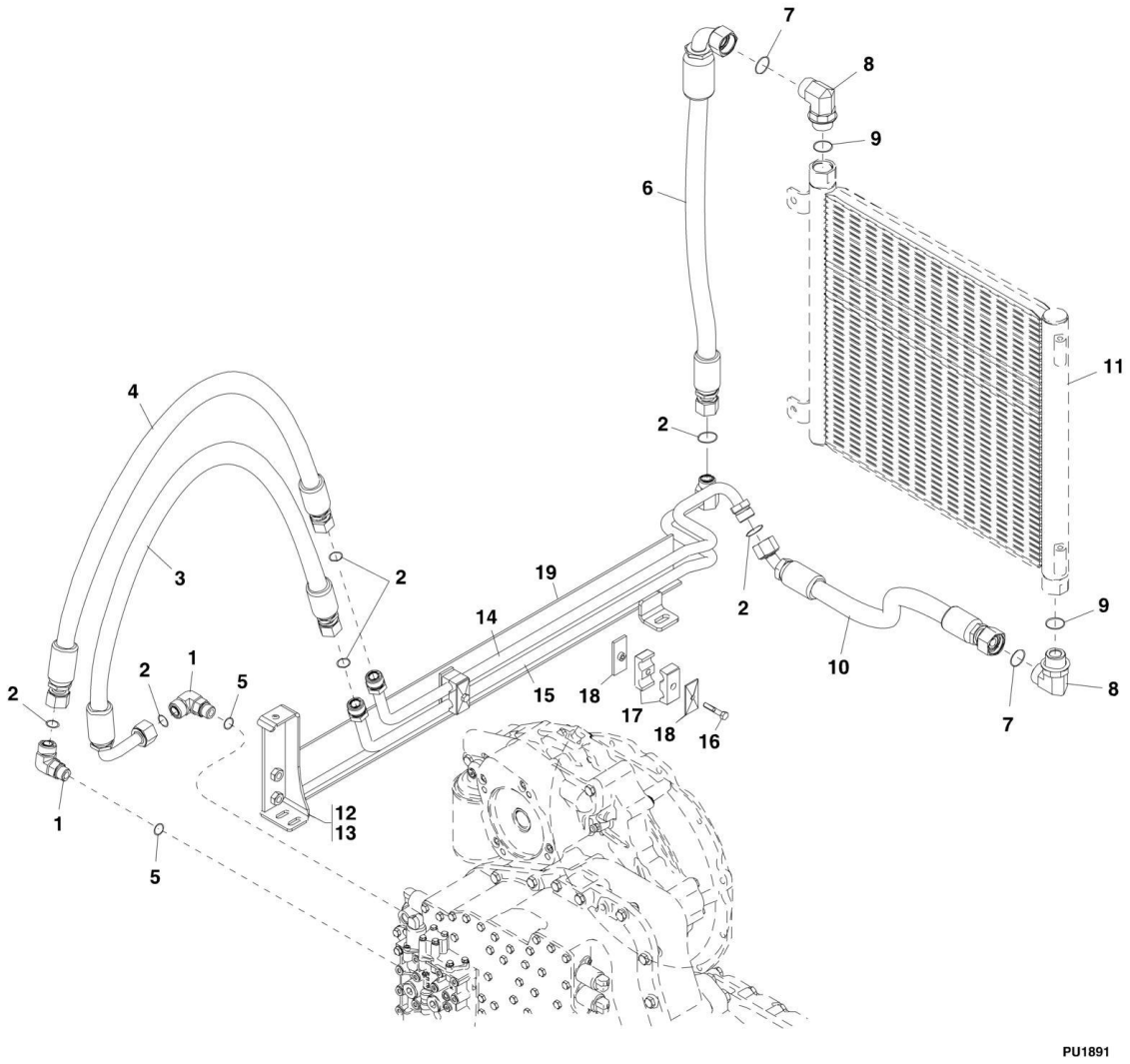

FIGURE 8-20. TRANSMISSION OIL COOLER ASSEMBLY (644E Prior to SN 0160048717, Excluding 01600045421; 944E Prior to SN 0160041827)

ITEM	PART NUMBER	QTY	DESCRIPTION	REV
1	2131210	2	ELBOW, 90	
2	8630006	6	O-RING, #12	
3	2717014	1	HOSE ASSEMBLY	
4	2717015	1	HOSE ASSEMBLY	
5	8630005	2	O-RING, #10	
6	2717051	1	HOSE ASSEMBLY	
7	8630007	2	O-RING, #16	
8	2131616	2	ELBOW, 90	
9	8640903	2	O-RING	
10	2717050	1	HOSE ASSEMBLY	
11		Ref	TRANSMISSION OIL COOLER ASSEMBLY, (See ENGINE AND ATTACHING PART SECTION for Breakdown)	
12	4341041	1	HYDRAULIC TANK RETAINER ASSEMBLY, (includes items 13 thru 19)	
13	0903221	1	TUBE SUPPORT BRACKET WELDMENT	
14	3460446	1	COOLER TUBE ASSEMBLY	
15	3460471	1	COOLER TUBE ASSEMBLY	
16	0641514	2	HEX HD CAPSCREW, 5/16-18X1-3/4, GR5	
17	77133136	2	TWIN CLAMP	
18	77133137	2	TWIN CLAMP COVER PLATE	
19	8581036	1	FOAM STRIP	

FIGURE 8-21. TRANSMISSION OIL COOLER ASSEMBLY (644E SN 0160048717 to Present, Including 0160045421; 944E SN 0160041827 to Present)

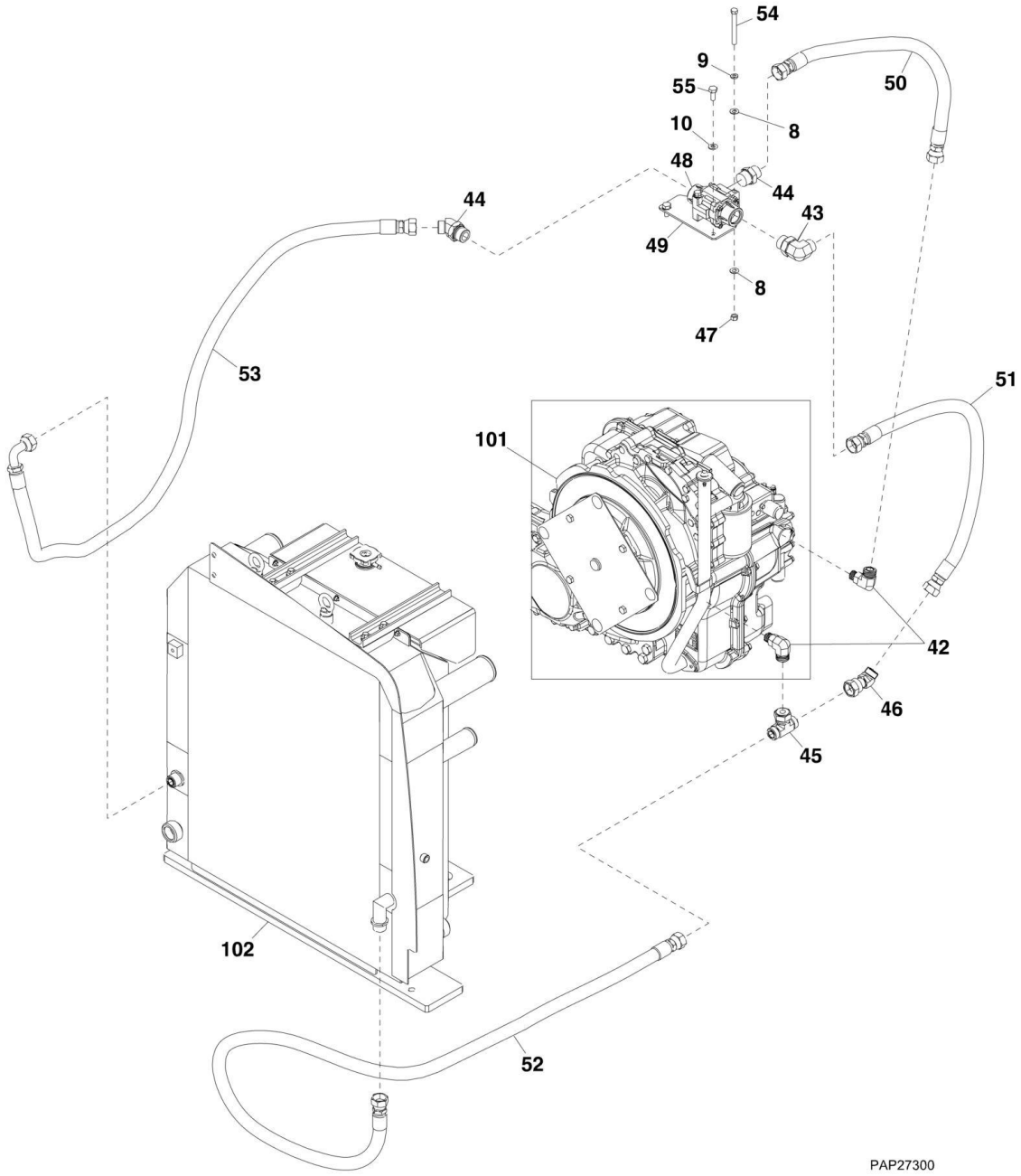

FIGURE 8-21. TRANSMISSION OIL COOLER ASSEMBLY (644E SN 0160048717 to Present, Including 0160045421; 944E SN 0160041827 to Present)

ITEM	PART NUMBER	QTY	DESCRIPTION	REV
8	4711600	4	WASHER, 3/8	
9	4761600	2	LOCKWASHER, 3/8	
10	4812000	2	WASHER, 10mm	
42	2131210	2	ADAPTER, 90, (includes o-ring)	
43	2131216	1	ADAPTER, 90, (includes o-ring)	
44	2151216	2	ADAPTER, 45, (includes o-ring)	
45	2170812	1	TEE FITTING, (includes o-ring)	
46	2172312	1	SWIVEL NUT, 45, (includes o-ring)	
47	3271601	2	HEX NUT, 3/8-16, GR8	
48	1001119801	1	THERMAL BYPASS VALVE	
49	1001120839	1	VALVE MOUNTING PLATE	
50	1001120840	1	HOSE ASSEMBLY	
51	1001120842	1	HOSE ASSEMBLY	
52	1001120844	1	HOSE ASSEMBLY	
53	1001120853	1	HOSE ASSEMBLY	
54	0641628	2	HEX HD CAPSCREW, 3/8-16X3-1/2, GR8	
55	0761012	2	HEX HD CAPSCREW, M10X25, GR8.8	
101		Ref	TRANSMISSION, (See DRIVE TRAIN SECTION for Breakdown)	
102		Ref	RADIATOR ASSEMBLY, (See ENGINE AND ATTACHING PARTS SECTION for Breakdown)	

FIGURE 8-22. OIL COOLER (644E Prior to SN 0160048717, Excluding 0160045421; 944E Prior to SN 0160041827)

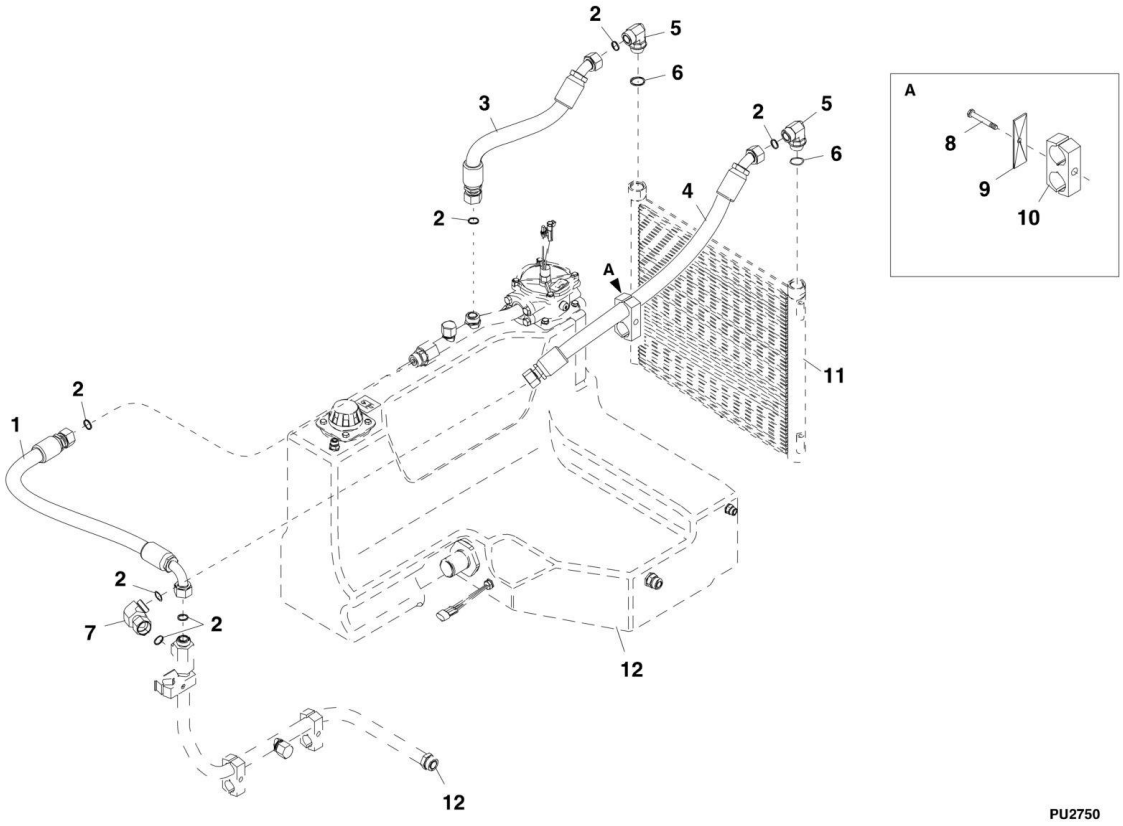

FIGURE 8-22. OIL COOLER (644E Prior to SN 0160048717, Excluding 0160045421; 944E Prior to SN 0160041827)

ITEM	PART NUMBER	QTY	DESCRIPTION	REV
1	2717016	1	HOSE ASSEMBLY	
2	8630007	7	O-RING, #16	
3	2716914	1	HOSE ASSEMBLY	
4	2716915	1	HOSE ASSEMBLY	
5	8770196	2	ELBOW, 90	
6	8770091	2	O-RING	
7	2172116	1	ELBOW, 90, (swivel nut)	
8	8303550	1	HEX HD CAPSCREW, M8X60, GR8.8	
9	8750025	1	TWIN COVER PLATE	
10	8750040	1	TWIN CLAMP SET, 1.46 DIA	
11		Ref	HYDRAULIC OIL COOLER ASSEMBLY, (See ENGINE AND ATTACHING PARTS SECTION for Breakdown)	
12		Ref	HYDRAULIC RESERVOIR, (See HYDRAULIC COMPONENTS SECTION for Breakdown)	

FIGURE 8-23. OIL COOLER (644E SN 0160048717 to Present, Including 0160045421; 944E SN 0160041827 to Present)

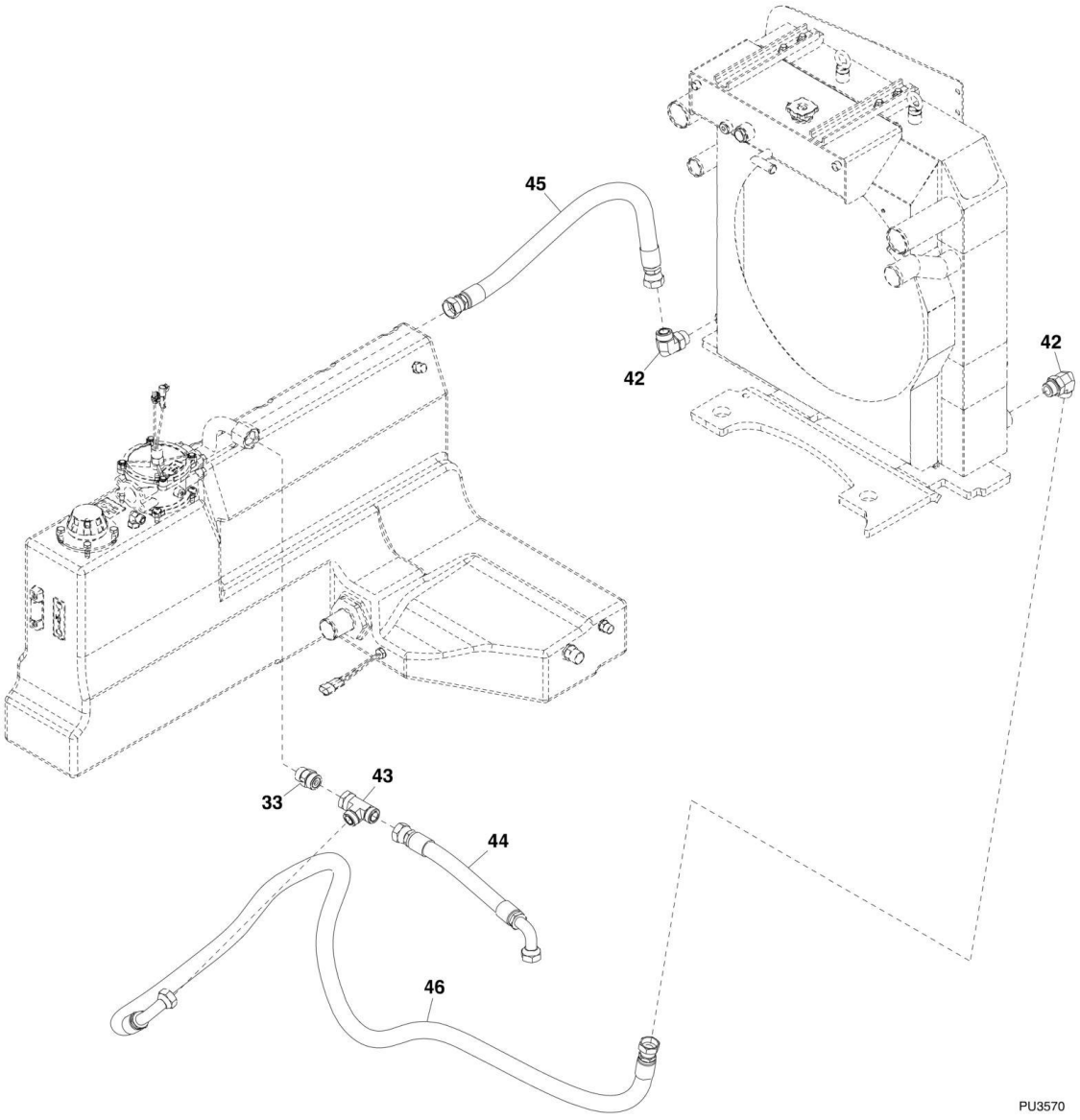

FIGURE 8-23. OIL COOLER (644E SN 0160048717 to Present, Including 0160045421; 944E SN 0160041827 to Present)

ITEM	PART NUMBER	QTY	DESCRIPTION	REV
33		Ref	CHECK VALVE, (See PUMP SUCTION AND RETURN for Breakdown)	
42	2131616	2	ADAPTER, 90, (includes o-ring)	
43	2170716	1	TEE FITTING, (includes o-ring)	
44	1001112594	1	HOSE ASSEMBLY	
45	1001121628	1	HOSE ASSEMBLY	
46	1001121629	1	HOSE ASSEMBLY	

SECTION 9 - HYDRAULIC COMPONENTS

FIGURE 9-1. EXTEND/RETRACT CYLINDER (644E SN 17569 through 20123, SN 0160002514 through 0160005325, Excluding 0160004236 and 0160004237)

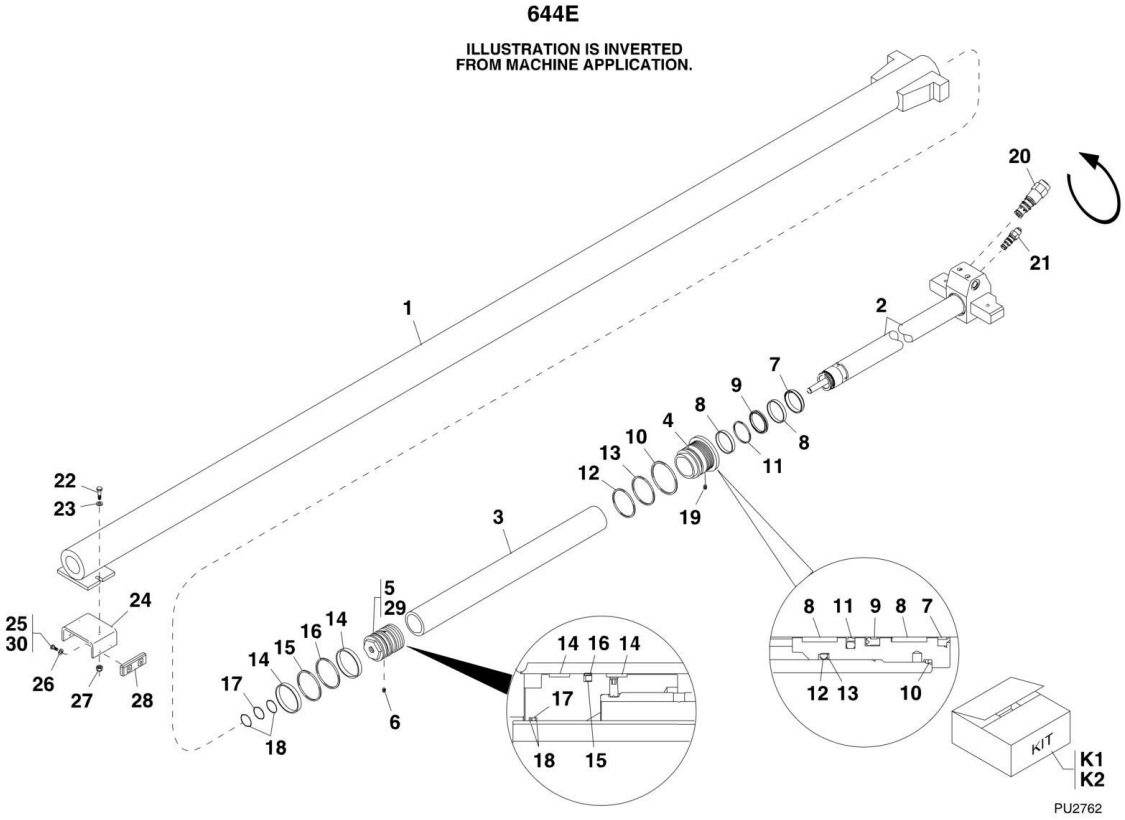

FIGURE 9-1. EXTEND/RETRACT CYLINDER (644E SN 17569 through 20123, SN 0160002514 through 0160005325, Excluding 0160004236 and 0160004237)

ITEM	PART NUMBER	QTY	DESCRIPTION	REV
	2716861	NLA	EXTEND CYLINDER, (no longer available, use Kit K2 for replacement)	
1	N.S.S.	1	WELDMENT TUBE	
2	8036591	1	ROD WELDMENT	
3	8036592	1	ROD SPACER	
4	8036593	1	HEAD GLAND, (torque to 300-400 lb-ft)	
5	8036594	1	PISTON, (torque to 330-390 lb-ft)	
6	8035315	1	SET SCREW, 5/16-18X.63, (loctite 243 and torque to 155-175 lb-in)	
7	Kit K1	1	WIPER SEAL	
8	Kit K1	2	PRECISION WEARBAND	
9	Kit K1	1	BT U-CUP	
10	Kit K1	1	O-RING	
11	Kit K1	1	TFE BUFFER SEAL	
12	Kit K1	1	O-RING	
13	Kit K1	1	BACKUP RING	
14	Kit K1	2	PRECISION WEARBAND	
15	Kit K1	1	RECT SECTION SEAL, TFE PISTON	
16	Kit K1	1	SQUARE RING	
17	Kit K1	1	O-RING	
18	Kit K1	2	DYNAMIC BACKUP RING	
19	Kit K1	2	LOCKING INSERT	
20	8036590	1	COUNTERBALANCE VALVE, ISEL90 4000 PSI, (275 bar)	
20	8205657	1	SEAL KIT	
21	8036229	1	PO CHECK VALVE, (torque to 45-50 lb-ft)	
21	8205656	1	SEAL KIT	
22	8303785	2	HEX HD CAPSCREW, M2X45, GR8.8	
23	8307220	2	PLAIN WASHER, M12	
24	7300509	1	EXTEND CYLINDER BRACKET PAD MOUNT	
25	8303784	4	HEX HD CAPSCREW, M10X20, GR8.8	
26	8307221	4	PLAIN WASHER, M10	
27	8310625	4	HEX LOCKNUT, M12-1.75	
28	7300032	2	WEAR PAD	
29	8526011	AR	LOCTITE 271, (apply to item 5)	
30	8526007	AR	LOCTITE 242, (apply to item 25)	
K1	8036475	1	SEAL KIT, (includes items 7 thru 19)	
K2	8024061	1	EXTEND CYLINDER SERVICE KIT, (includes Extend Cylinder 2717241 and Rear Boom Cover 7302064)	

FIGURE 9-2. EXTEND/RETRACT CYLINDER (644E SN 0160005784 to Present, Including 0160004236 and 0160004237)

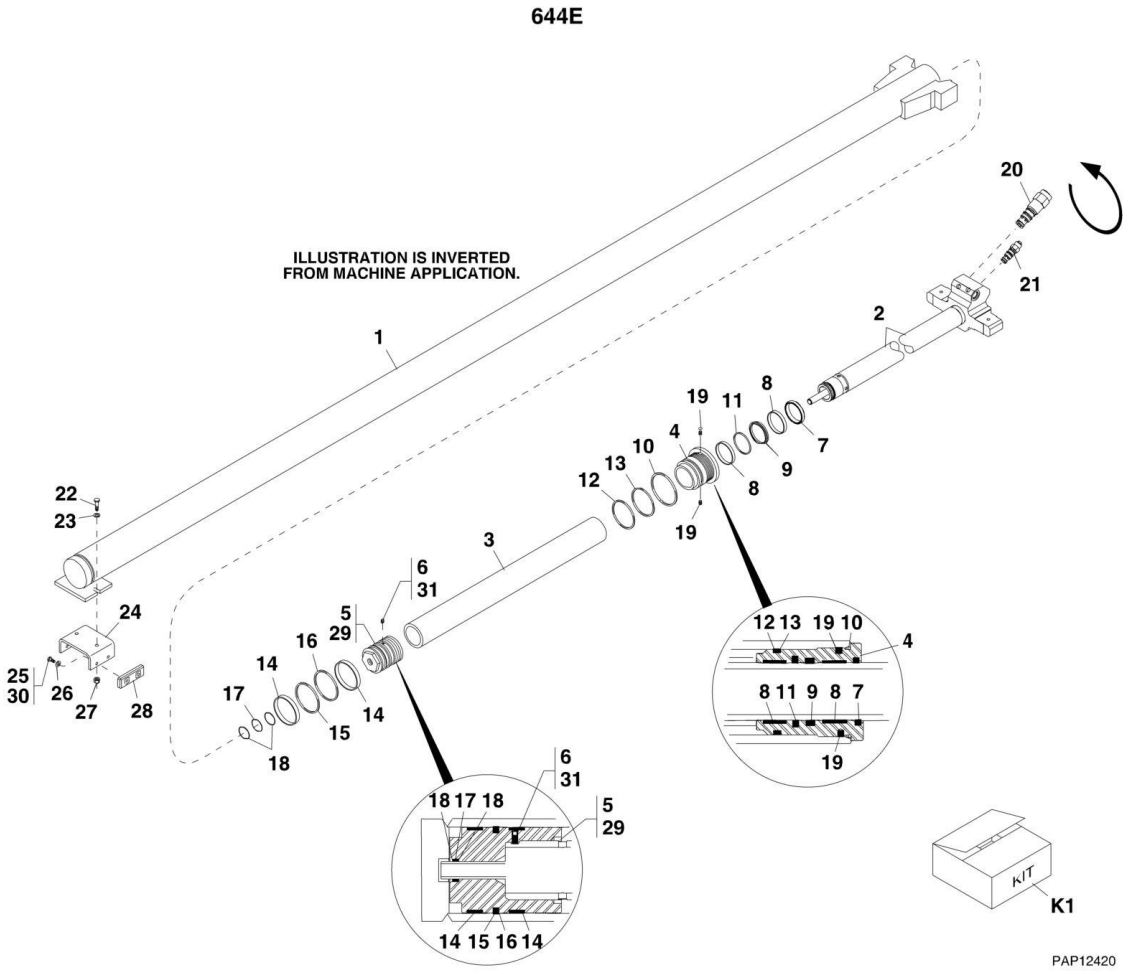

FIGURE 9-2. EXTEND/RETRACT CYLINDER (644E SN 0160005784 to Present, Including 0160004236 and 0160004237)

ITEM	PART NUMBER	QTY	DESCRIPTION	REV
	2717241	1	EXTEND CYLINDER, (includes items 1 thru 21)	B, M
1	N.S.S.	1	WELDMENT TUBE	
2	7026629	1	ROD WELDMENT	
3	8036592	1	ROD SPACER	
4	8036593	1	HEAD GLAND, (torque to 300-400 lb-ft)	
5	8036594	1	PISTON, (Loctite and torque to 330-390 lb-ft)	
6	8035315	1	SET SCREW, 5/16-18X.63, (Loctite and torque to 155-175 lb-in)	
7	Kit K1	1	WIPER SEAL	
8	Kit K1	2	PRECISION WEARBAND	
9	Kit K1	1	U-CUP, BT	
10	Kit K1	1	O-RING	
11	Kit K1	1	TFE BUFFER SEAL	
12	Kit K1	1	O-RING	
13	Kit K1	1	BACK-UP RING	
14	Kit K1	2	PRECISION WEARBAND	
15	Kit K1	1	RECT SECTION SEAL, TFE PISTON	
16	Kit K1	1	SQUARE RING	
17	Kit K1	1	O-RING	
18	Kit K1	2	DYNAMIC BACKUP RING	
19	Kit K1	2	LOCKING INSERT	
20	7026628	1	COUNTERBALANCE VALVE, 4065 PSI, (280 bar), (torque to 150-160 lb-ft)	
20	8205657	1	SEAL KIT	
21	7029513	1	PO CHECK VALVE, (torque to 45-50 lb-ft)	
21	7029518	1	SEAL KIT	
22	8303785	2	HEX HD CAPSCREW, M2X45, GR8.8	
23	8307220	2	PLAIN WASHER, M12	
24	7300509	1	EXTEND CYLINDER BRACKET PAD MOUNT	
25	8303784	4	HEX HD CAPSCREW, M10X20, GR8.8	
26	8307221	4	PLAIN WASHER, M10	
27	8310625	4	HEX LOCKNUT, M12-1.75	
28	7300032	2	WEAR PAD	
29	8526011	AR	LOCTITE 271, (apply to item 5)	
30	8526007	AR	LOCTITE 242, (apply to item 25)	
31	1001095650	AR	LOCTITE 243, (apply to item 6)	
K1	8036475	1	SEAL KIT, (includes items 7 thru 19)	

FIGURE 9-3. EXTEND/RETRACT CYLINDER (944E SN 18554 through 20123, SN 0160002514 through 0160005729)

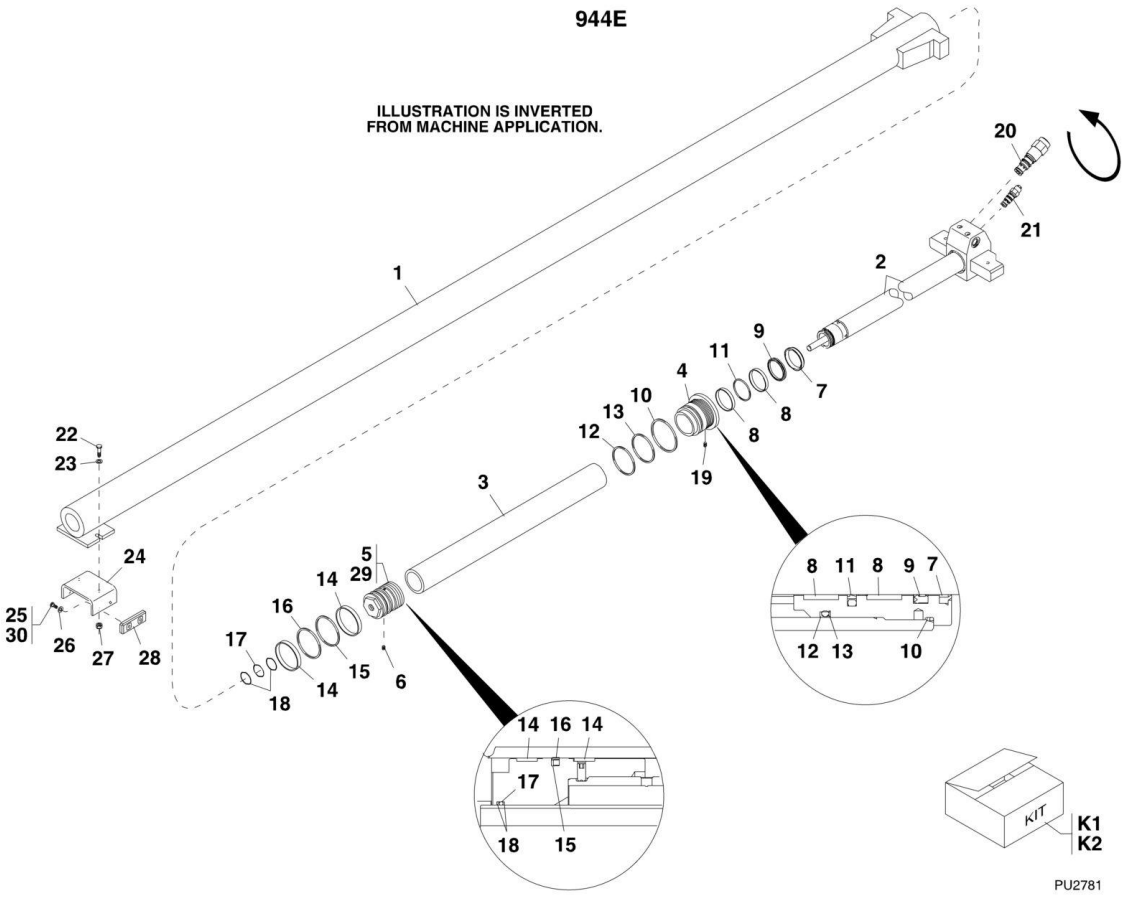

FIGURE 9-3. EXTEND/RETRACT CYLINDER (944E SN 18554 through 20123, SN 0160002514 through 0160005729)

ITEM	PART NUMBER	QTY	DESCRIPTION	REV
	2716897	NLA	EXTEND CYLINDER, (no longer available, use Kit K2 for replacement)	
1	N.S.S.	1	WELDMENT TUBE	
2	7026630	1	ROD WELDMENT	
3	8036638	1	ROD SPACER	
4	8036639	1	HEAD GLAND, (torque to 300-400 lb-ft)	
5	8036233	1	PISTON, (torque to 330-390 lb-ft)	
6	8035315	1	SET SCREW, 5/16-18 X.63, (LOCTITE 243 and torque to 330-390 lb-in)	
7	Kit K1	1	WIPER SEAL	
8	Kit K1	2	PECISION WEARBAND	
9	Kit K1	1	U-CUP, BS	
10	Kit K1	1	O-RING	
11	Kit K1	1	TFE BUFFER SEAL	
12	Kit K1	1	O-RING	
13	Kit K1	1	BACK-UP RING	
14	Kit K1	2	PECISION WEARBAND	
15	Kit K1	1	RECT SECTION SEAL, TFE PISTON	
16	Kit K1	1	SQUARE RING	
17	Kit K1	1	O-RING	
18	Kit K1	2	DYNAMIC BACK-UP RING	
19	Kit K1	2	LOCKING INSERT	
20	8036590	1	COUNTERBALANCE VALVE, 4000 PSI, (275 bar), (torque to 45-50 lb-ft)	
20	8205656	1	SEAL KIT	
21	8036229	1	PO CHECK VALVE, (torque to 45-50 lb-ft)	
21	8205656	1	SEAL KIT	
22	8303785	2	HEX HD CAPSCREW, M2X45, GR8.8	
23	8307220	2	PLAIN WASHER, M12	
24	7300509	1	EXTEND CYLINDER PAD MOUNT BRACKET	
25	8303784	4	HEX HD CAPSCREW, M10X20, GR8.8	
26	8307221	4	PLAIN WASHER, M10	
27	8310625	4	HEX LOCKNUT, M12-1.75	
28	7300032	2	WEAR PAD	
29	8526011	AR	LOCTITE 271, (apply to item 5)	
30	8526007	AR	LOCTITE 242, (apply to item 25)	
K1	8036328	1	SEAL KIT, (includes items 7 thru 19)	
K2	8024062	1	EXTEND CYLINDER SERVICE KIT, (includes Extend Cylinder 2717243 and Rear Boom Cover 7302065)	

FIGURE 9-4. EXTEND/RETRACT CYLINDER (SN 0160005814 to Present)

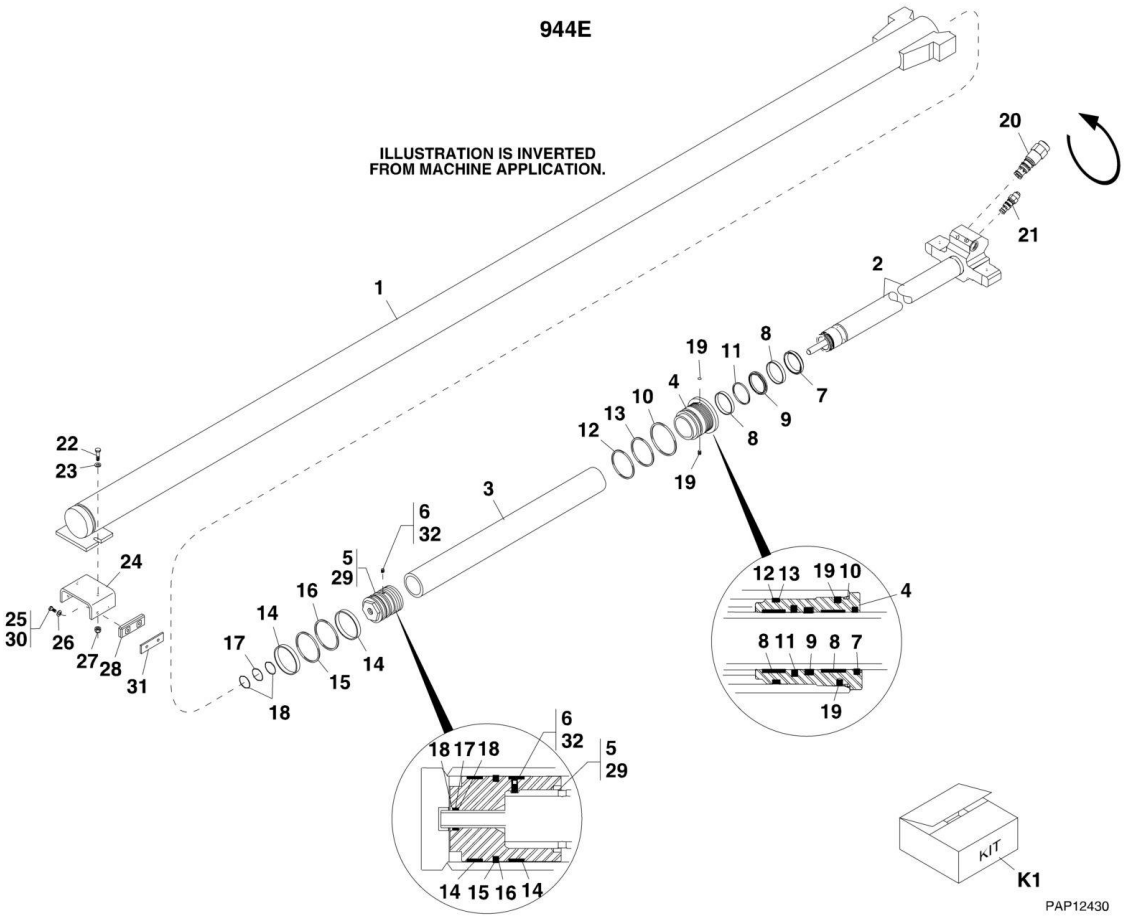

FIGURE 9-4. EXTEND/RETRACT CYLINDER (SN 0160005814 to Present)

ITEM	PART NUMBER	QTY	DESCRIPTION	REV
	2717243	1	EXTEND/RETRACT CYLINDER, (includes items 1 thru 21)	B, N
1	70023503	1	WELDMENT TUBE	
2	7026630	1	ROD WELDMENT	
3	8036638	1	ROD SPACER	
4	8036639	1	HEAD GLAND, (torque to 300-400 lb-ft)	
5	8036233	1	PISTON, (Loctite and torque to 330-390 lb-ft)	
6	8035315	1	SET SCREW, 5/16-18X.63, (Loctite and torque to 155-175 lb-in)	
7	Kit K1	1	WIPER SEAL	
8	Kit K1	2	PECISION WEARBAND	
9	Kit K1	1	U-CUP, BT	
10	Kit K1	1	O-RING	
11	Kit K1	1	TFE BUFFER SEAL	
12	Kit K1	1	O-RING	
13	Kit K1	1	BACKUP RING	
14	Kit K1	2	PRECISION WEARBAND	
15	Kit K1	1	RECT SECTION TFE PISTON SEAL	
16	Kit K1	1	SQUARE RING	
17	Kit K1	1	O-RING	
18	Kit K1	2	DYNAMIC BACKUP RING	
19	Kit K1	2	LOCKING INSERT	
20	7026628	1	COUNTERBALANCE VALVE, 4065 PSI, (280 bar), (torque to 150-160 lb-ft)	
20	8205657	1	SEAL KIT	
21	7029513	1	PO CHECK VALVE, (torque to 45-50 lb-ft)	
21	7029518	1	SEAL KIT	
22	8303785	2	HEX HD CAPSCREW, M2X45, GR8.8	
23	8307220	2	Plain Washer, M12	
24	7300886	1	EXTEND CYLINDER PAD MOUNT BRACKET	
25	8303777	1	HEX HD CAPSCREW, M10X1.5X35mm, GR8.8	
26	8307221	4	PLAIN WASHER, M10	
27	8310625	4	HEX LOCKNUT, M12-1.75	
28	7300032	2	WEAR PAD	
29	8526011	AR	LOCTITE 271, (apply to item 5)	
30	8526007	AR	LOCTITE 242, (apply to item 25)	
31	7301099	1	EXTEND CYLINDER PAD MOUNT SPACER	
32	1001095650	AR	LOCTITE 243, (apply to item 6)	
K1	70020310	1	SEAL KIT, (includes items 7 thru 19)	

FIGURE 9-5. LIFT CYLINDER

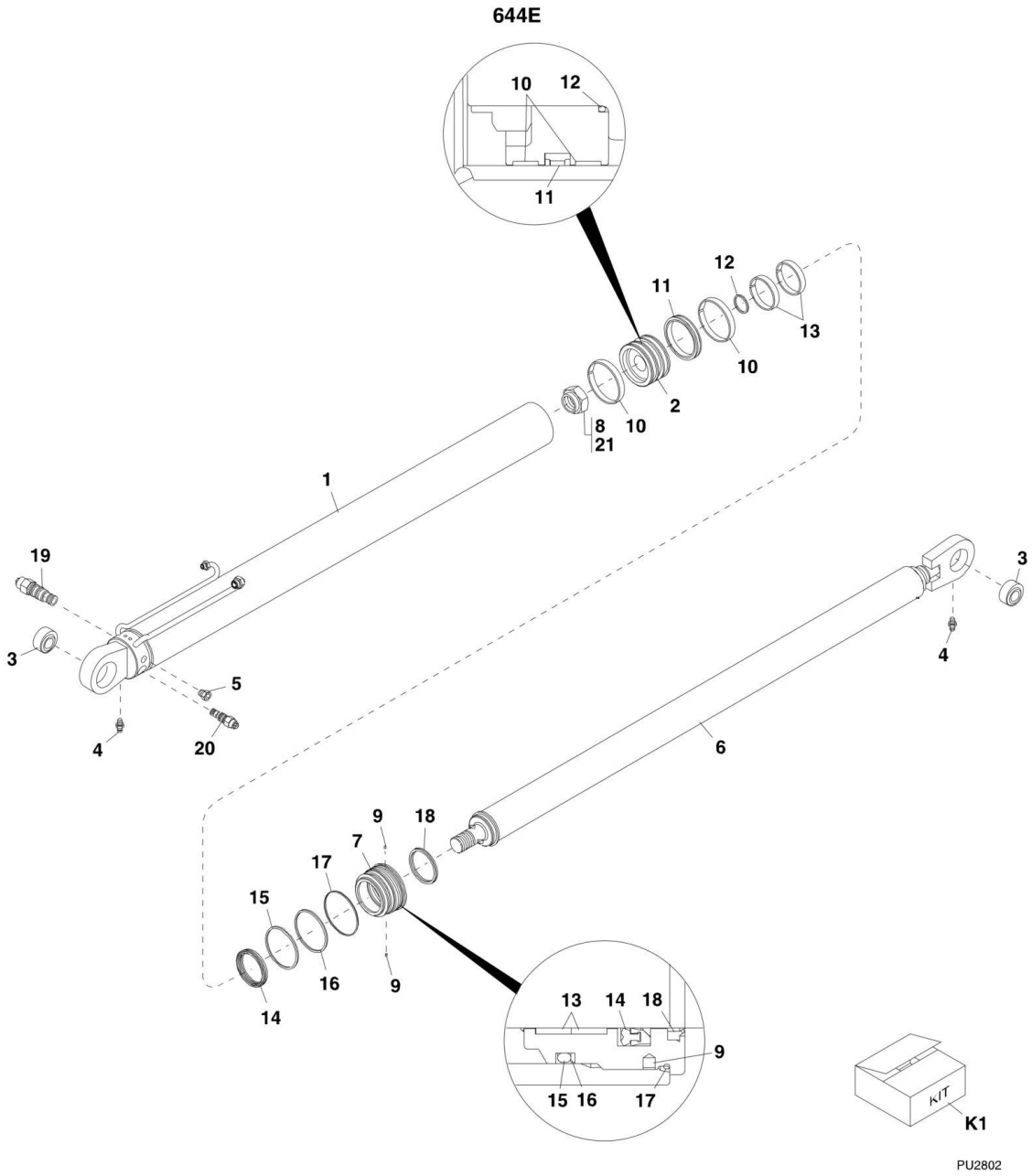

FIGURE 9-5. LIFT CYLINDER

ITEM	PART NUMBER	QTY	DESCRIPTION	REV
	2716904	1	LIFT CYLINDER, (includes items 1 thru 20)	AB
1	N.S.S.	1	WELDMENT TUBE	
2	8035309	1	Piston	
3	8036236	2	SPHERICAL BEARING, WITH SEALS	
4	8520013	2	LUBE FITTING, 1/8-27	
5	8035785	2	HOLLOW HEX PLUG, #4, (torque to 10-12 lb-ft)	
6	8036597	1	WELDMENT ROD	
7	8036598	1	HEAD GLAND, (torque to 10-120 lb-ft)	
8	8035308	1	LOCKNUT, 2-12, (loctite and torque to 2200-2600 lb-ft)	
9	Kit K1	2	LOCKING INSERT	
10	Kit K1	2	PRECISION WEARBAND	
11	Kit K1	1	CAPPED T SEAL	
12	Kit K1	1	O-RING	
13	Kit K1	2	PRECISION WEARBAND	
14	Kit K1	1	DZR SEAL	
15	Kit K1	1	O-RING	
16	Kit K1	1	BACKUP RING	
17	Kit K1	1	O-RING	
18	Kit K1	1	WIPER SEAL	
19	8036596	1	COUNTERBALANCE VALVE, 4000 PSI, (275 bar), (torque to 40-45 lb-ft)	
19	8205656	1	SEAL KIT	
20	8036229	1	PO CHECK VALVE, (torque to 40-45 lb-ft)	
20	8205656	1	SEAL KIT	
21	8526011	AR	LOCTITE 271, (apply to item 8)	
K1	8036474	1	SEAL KIT, (includes items 9 thru 18)	

FIGURE 9-6. LIFT CYLINDER (944E SN 18554 through 20123, SN 0160002514 through 0160005729)

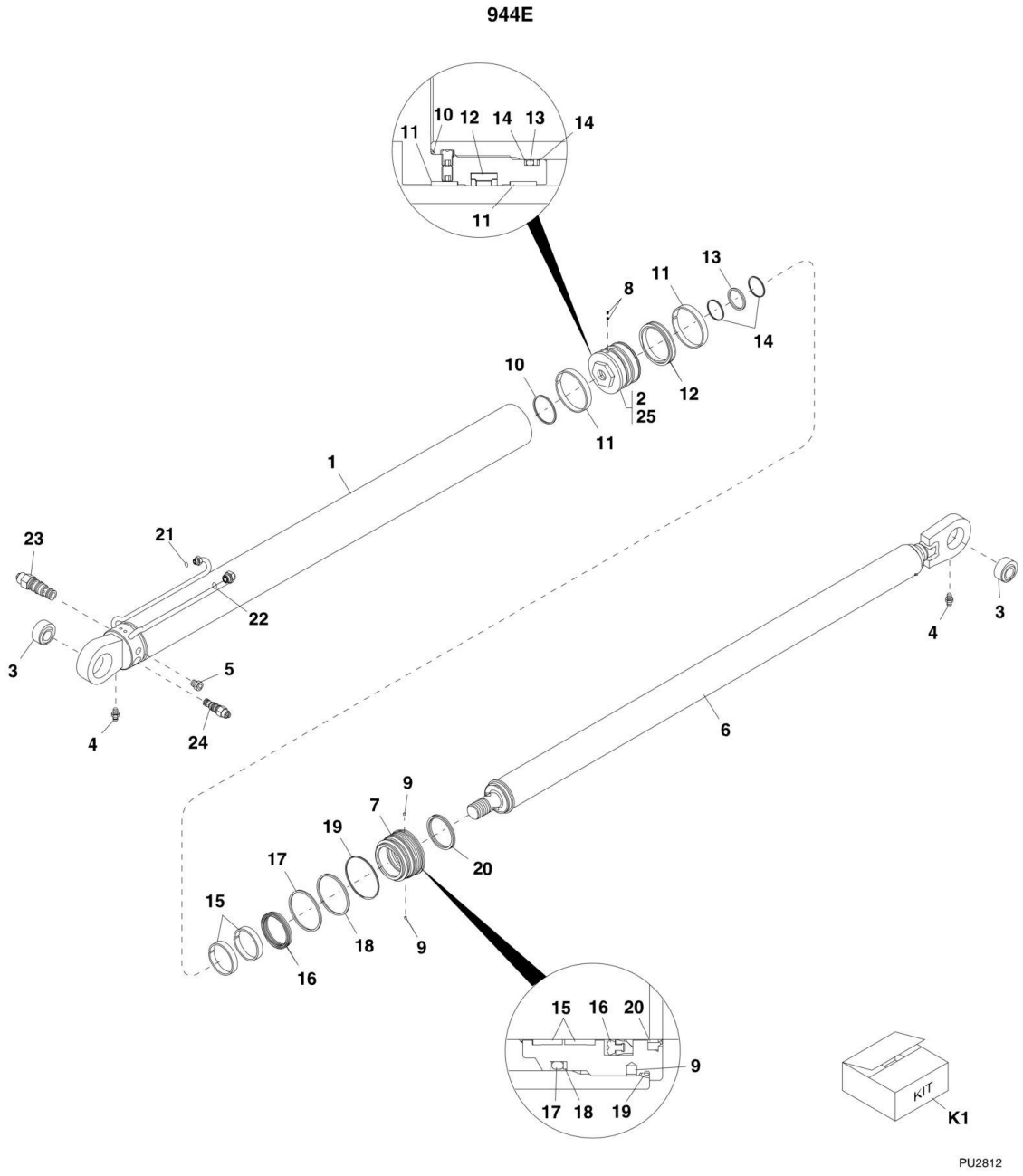

FIGURE 9-6. LIFT CYLINDER (944E SN 18554 through 20123, SN 0160002514 through 0160005729)

ITEM	PART NUMBER	QTY	DESCRIPTION	REV
	Not Available	NLA	LIFT CYLINDER, (no longer available, use 2717242 for replacement or items 1 thru 24 for service)	
1	N.S.S.	1	WELDMENT TUBE	
2	8036242	1	PISTON, (torque to 500-600 lb-ft)	
3	8036236	2	SPHERICAL BEARING, WITH SEALS	
4	8520013	2	LUBE FITTING, 1/8-27	
5	8035785	2	HOLLOW HEX PLUG, #4, (torque to 10-12 lb-ft)	
6	8036640	1	WELDMENT ROD	
7	8036241	1	HEAD GLAND, (torque to 500-600 lb-ft)	
8	8036238	2	SET SCREW, .313-18X.44	
9	Kit K1	2	LOCKING INSERT	
10	Kit K1	1	O-RING	
11	Kit K1	2	PRECISION WEARBAND	
12	Kit K1	1	CAPPED T SEAL	
13	Kit K1	1	O-RING	
14	Kit K1	2	DYNAMIC BACKUP RING	
15	Kit K1	2	PECISION WEARBAND	
16	Kit K1	1	DZR SEAL	
17	Kit K1	1	O-RING	
18	Kit K1	1	BACKUP RING	
19	Kit K1	1	O-RING	
20	Kit K1	1	WIPER SEAL	
21	Kit K1	1	O-RING	
22	Kit K1	1	O-RING	
23	8036596	1	COUNTERBALANCE VALVE, 4000 PSI, (275 bar), (torque to 40-45 lb-ft)	
23	8205656	1	SEAL KIT	
24	8036229	1	PO CHECK VALVE, (torque to 40-45 lb-ft)	
24	8205656	1	SEAL KIT	
25	8526011	AR	LOCTITE 271, (apply to item 2)	
K1	8036644	1	SEAL KIT, (includes items 9 thru 22)	

FIGURE 9-7. LIFT CYLINDER 944E (SN 0160005814 to Present)

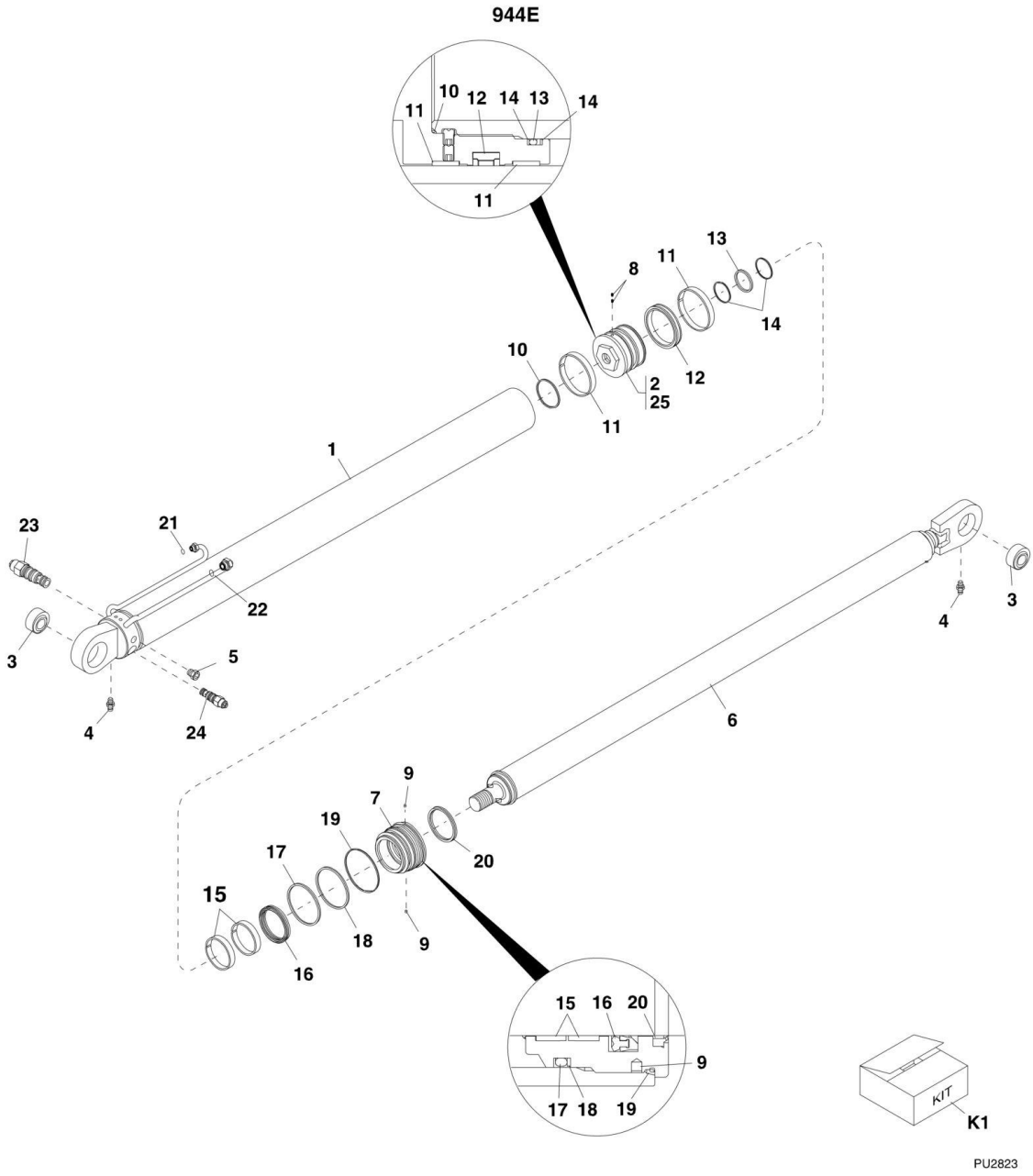

FIGURE 9-7. LIFT CYLINDER 944E (SN 0160005814 to Present)

ITEM	PART NUMBER	QTY	DESCRIPTION	REV
	2717242	1	LIFT CYLINDER, (includes items 1 thru 24)	
1	N.S.S.	1	WELDMENT TUBE	
2	8036242	1	PISTON, (torque to 500-600 lb-ft)	
3	8036236	2	SPHERICAL BEARING, WITH SEALS	
4	8520013	2	LUBE FITTING, 1/8-27	
5	8035785	2	HOLLOW HEX PLUG, #4, (torque to 10-12 lb-ft)	
6	8036640	1	WELDMENT ROD	
7	8036241	1	HEAD GLAND, (torque to 500-600 lb-ft)	
8	8036238	2	SCREW SET, .313-18X.44	
9	Kit K1	2	LOCKING INSERT	
10	Kit K1	1	O-RING	
11	Kit K1	2	PECISION WEARBAND	
12	Kit K1	1	CAPPED T SEAL	
13	Kit K1	1	O-RING	
14	Kit K1	2	DYNAMIC BACKUP RING	
15	Kit K1	2	PRECISION WEARBAND	
16	Kit K1	1	DZR SEAL	
17	Kit K1	1	O-RING	
18	Kit K1	1	BACKUP RING	
19	Kit K1	1	O-RING	
20	Kit K1	1	WIPER SEAL	
21	Kit K1	1	O-RING	
22	Kit K1	1	O-RING	
23	7029514	1	COUNTERBALANCE VALVE, 4000 PSI, (275 bar), (torque to 40-45 lb-ft)	
23	7029517	1	SEAL KIT	
24	7029513	1	PO CHECK VALVE, (torque to 40-45 lb-ft)	
24	7029518	1	SEAL KIT	
25	8526011	AR	LOCTITE 271, (apply to item 2)	
K1	8036644	1	SEAL KIT, (includes items 9 thru 22)	

FIGURE 9-8. ATTACHMENT TILT CYLINDER 644E

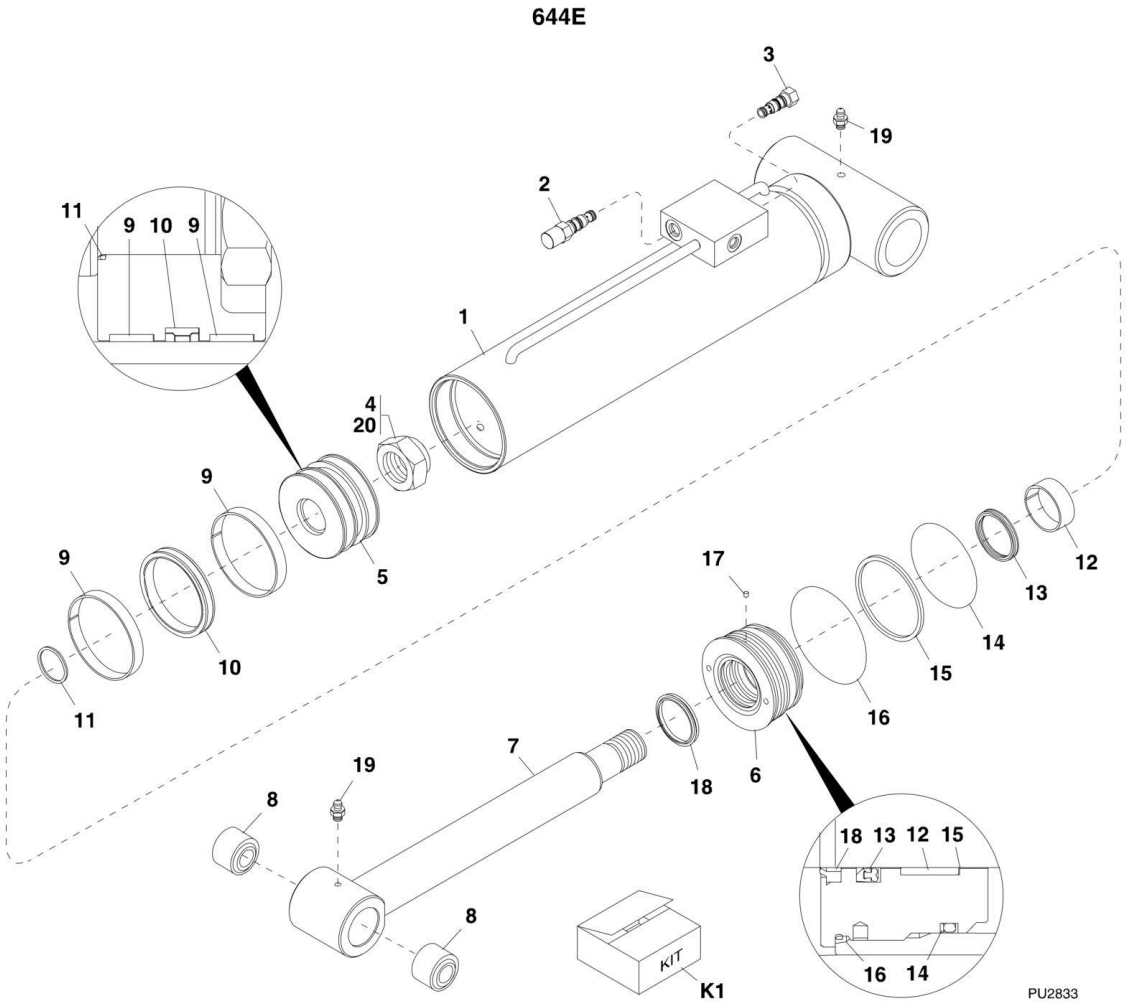

FIGURE 9-8. ATTACHMENT TILT CYLINDER 644E

ITEM	PART NUMBER	QTY	DESCRIPTION	REV
	2716864	1	ATTACHMENT TILT CYLINDER, (includes items 1 thru 19)	
1	70023328	1	TUBE WELDMENT	
2	8036750	1	PO CHECK VALVE, (torque to 30-35 lb-ft)	
2	2900770	1	SEAL KIT	
3	8035321	1	COUNTERBALANCE VALVE - CCC PRESET AT 4000 PSI, (275 bar), (torque to 30-35 lb-ft)	
3	8035327	1	Seal Kit	
4	8035322	1	HEX LOCKNUT, 1.5-12, (torque to 1100-1250 lb-ft)	
5	8035323	1	Piston	
6	8035324	1	HEAD GLAND, (torque to 300-400 lb-ft)	
7	8036577	1	WELDMENT ROD	
8	7300536	2	HARDENED STEEL BEARING	
9	Kit K1	2	PRECISION WEARBAND	
10	Kit K1	1	CAPPED T-SEAL	
11	Kit K1	1	O-RING	
12	Kit K1	1	PRECISION WEARBAND	
13	Kit K1	1	DEEP Z-SEAL - WITH ROD BACK-UP	
14	Kit K1	1	RING, BACK-UP	
15	Kit K1	1	O-RING	
16	Kit K1	1	O-RING	
17	Kit K1	1	LOCKING INSERT	
18	Kit K1	1	WIPER SEAL	
19	8520013	2	LUBE FITTING, 1/8-27	
20	8526011	AR	LOCTITE 271, (apply to item 4)	
K1	8035326	1	SEAL KIT, (includes items 9 thru 18)	

FIGURE 9-9. ATTACHMENT TILT CYLINDER 944E

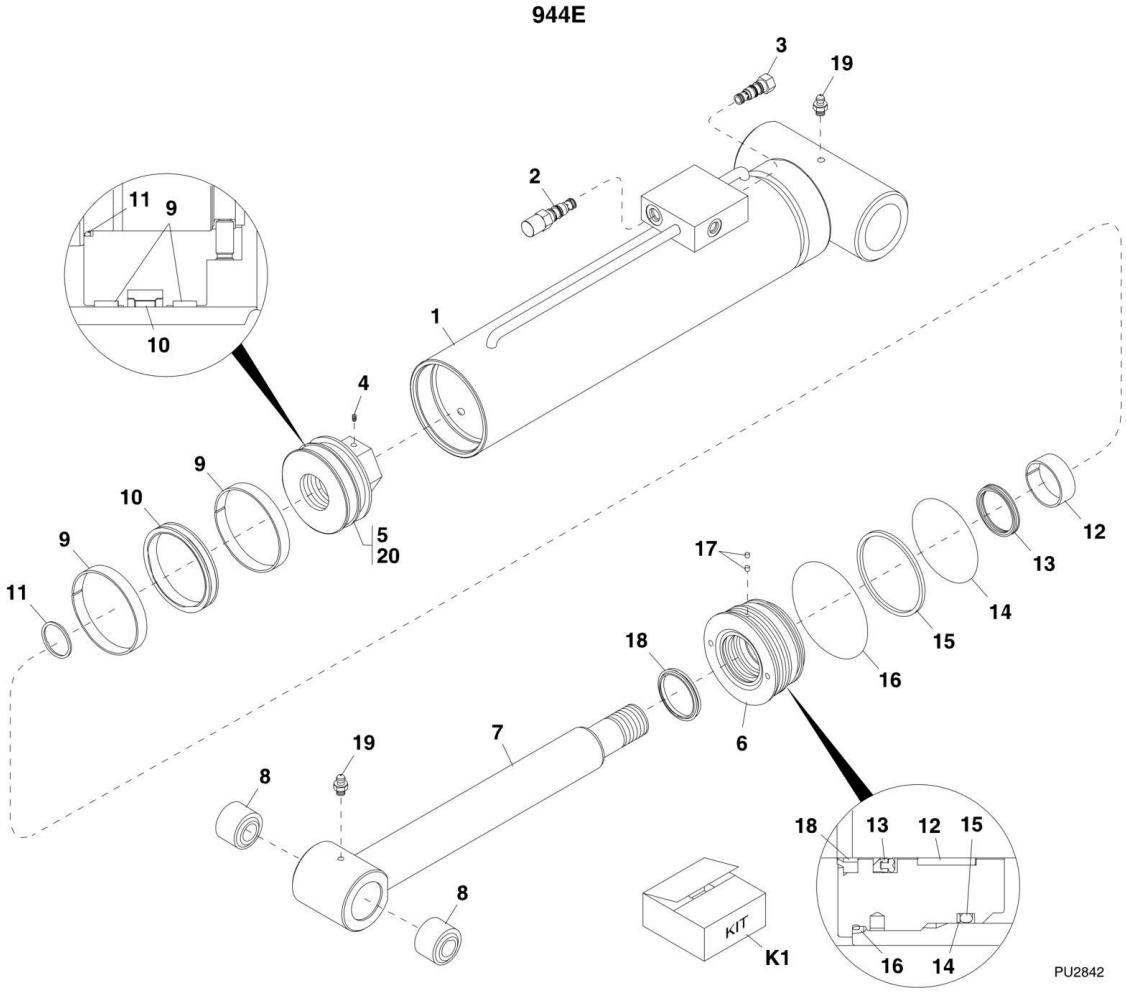

FIGURE 9-9. ATTACHMENT TILT CYLINDER 944E

ITEM	PART NUMBER	QTY	DESCRIPTION	REV
	2716894	1	ATTACHMENT TILT CYLINDER, (includes items 1 thru 19)	F
1	70022384	1	TUBE WELDMENT, (includes item 2)	
2	8036750	1	PO CHECK VALVE, (torque to 30-35 lb-ft)	
2	2900770	1	SEAL KIT	
3	8035321	1	COUNTERBALANCE VALVE - CCC PRESET AT 4000 PSI, (275 bar), (torque to 30-35lb-ft)	
3	8035327	1	Seal Kit	
4	8036629	1	SCREW, SET, 3/8-16X3/4, (loctite and torque to 35-40 lb-ft)	
5	8036632	1	PISTON, (torque to 1800-2000 lb-ft)	
6	8036631	1	HEAD GLAND, (torque to 300-400 lb-ft)	
7	8036630	1	WELDMENT ROD	
8	7300536	2	HARDENED STEEL BEARING	
9	Kit K1	2	PRECISION WEARBAND	
10	Kit K1	1	CAPPED T-SEAL	
11	Kit K1	1	O-RING	
12	Kit K1	1	PRECISION WEARBAND	
13	Kit K1	1	DEEP Z-SEAL - WITH ROD BACK-UP	
14	Kit K1	1	BACK-UP RING	
15	Kit K1	1	O-RING	
16	Kit K1	1	O-RING	
17	Kit K1	2	LOCKING INSERT	
18	Kit K1	1	WIPER SEAL	
19	8520013	2	LUBE FITTING, 1/8-27	
20	8526011	AR	LOCTITE 271, (apply to item 5)	
K1	8036547	1	SEAL KIT, (includes items 9 thru 18)	

FIGURE 9-10. FRAME LEVEL CYLINDER

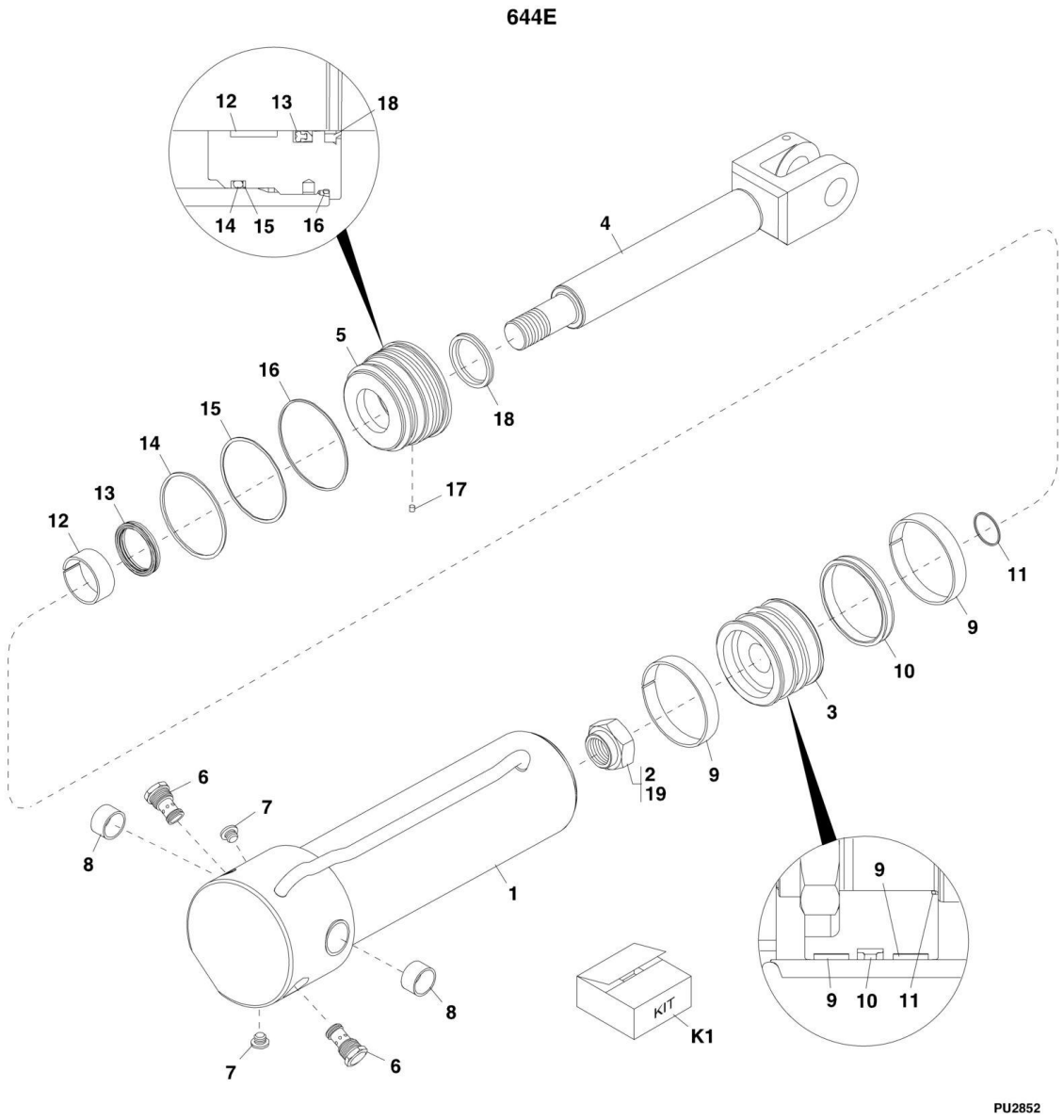

FIGURE 9-10. FRAME LEVEL CYLINDER

ITEM	PART NUMBER	QTY	DESCRIPTION	REV
	2717012	1	FRAME LEVEL CYLINDER, (includes items 1 thru 18)	AD
1	N.S.S.	1	WELDMENT TUBE	
2	8035322	1	HEX LOCKNUT, 1-1/2-12, (Loctite and torque to 1840-2025 lb-ft)	
3	8035323	1	PISTON	
4	8036584	1	WELDMENT ROD	
5	8036585	1	HEAD GLAND, (torque to 300-400 lb-ft)	
6	8035757	2	PO CHECK VALVE - SERIES 10, (torque to 30-35 lb-ft)	
6	8036739	1	SEAL KIT	
7	8035785	2	HOLLOW HEX PLUG, #4, (loctite 243 and torque to 10-12 lb-ft)	
8	8036583	2	POLYLUBE JOURNAL BEARING	
9	Kit K1	2	PRECISION WEARBAND	
10	Kit K1	1	CAPPED T-SEAL, TYPE 730	
11	Kit K1	1	O-RING	
12	Kit K1	1	PRECISION WEARBAND	
13	Kit K1	1	DEEP Z-SEAL - WITH ROD BACK-UP	
14	Kit K1	1	O-RING	
15	Kit K1	1	BACK-UP RING	
16	Kit K1	1	O-RING	
17	Kit K1	1	LOCKING INSERT	
18	Kit K1	1	WIPER SEAL	
19	8526011	AR	LOCTITE 271, (apply to item 2)	
K1	8036477	1	SEAL KIT, (includes items 9 thru 18)	

FIGURE 9-11. FRAME LEVEL CYLINDER (944E SN 17569 through 20123, SN 0160002514 through 0160004849, Excluding 0160004238 and 0160004239)

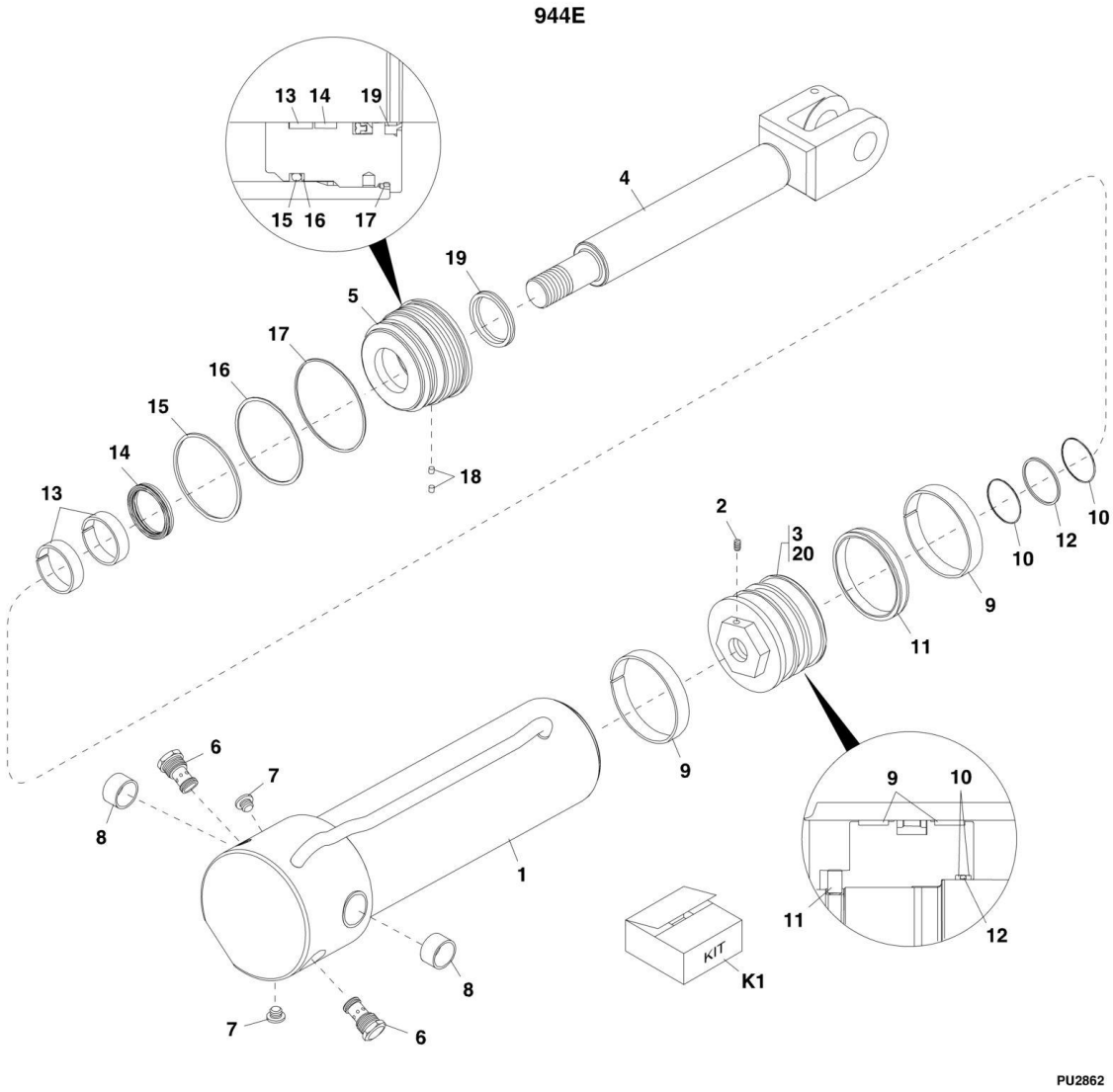

FIGURE 9-11. FRAME LEVEL CYLINDER (944E SN 17569 through 20123, SN 0160002514 through 0160004849, Excluding 0160004238 and 0160004239)

ITEM	PART NUMBER	QTY	DESCRIPTION	REV
	2716906	1	FRAME LEVEL CYLINDER, (includes items 1 thru 19)	
1	N.S.S.	1	WELDMENT TUBE	
2	8036633	1	SET SCREW, 3/8-16X.63	
3	8036636	1	PISTON, (torque to 1840-2025 lb-ft)	
4	8036634	1	WELDMENT ROD	
5	8036635	1	HEAD GLAND, (torque to 300-400 lb-ft)	
6	8035757	2	PO CHECK VALVE - SERIES 10, (torque to 30-35 lb-ft)	
6	8036739	1	SEAL KIT	
7	8035785	2	HOLLOW HEX PLUG, #4, (loctite 243 and torque to 10-12 lb-ft)	
8	8036583	2	POLYLUBE JOURNAL BEARING	
9	Kit K1	2	PRECISION WEARBAND	
10	Kit K1	2	DYNAMIC BACKUP RING	
11	Kit K1	1	CAPPED T-SEAL	
12	Kit K1	1	O-RING	
13	Kit K1	2	PRECISION WEARBAND	
14	Kit K1	1	DEEP Z-SEAL - WITH ROD BACK-UP	
15	Kit K1	1	O-RING	
16	Kit K1	1	BACK-UP RING	
17	Kit K1	1	O-RING	
18	Kit K1	2	LOCKING INSERT	
19	Kit K1	1	WIPER SEAL	
20	8526011	AR	LOCTITE 271, (apply to item 3)	
K1	8036543	1	SEAL KIT, (includes items 9 thru 19)	

FIGURE 9-12. FRAME LEVEL CYLINDER (944E SN 0160004927 to Present, Including 0160004238 and 0160004239)

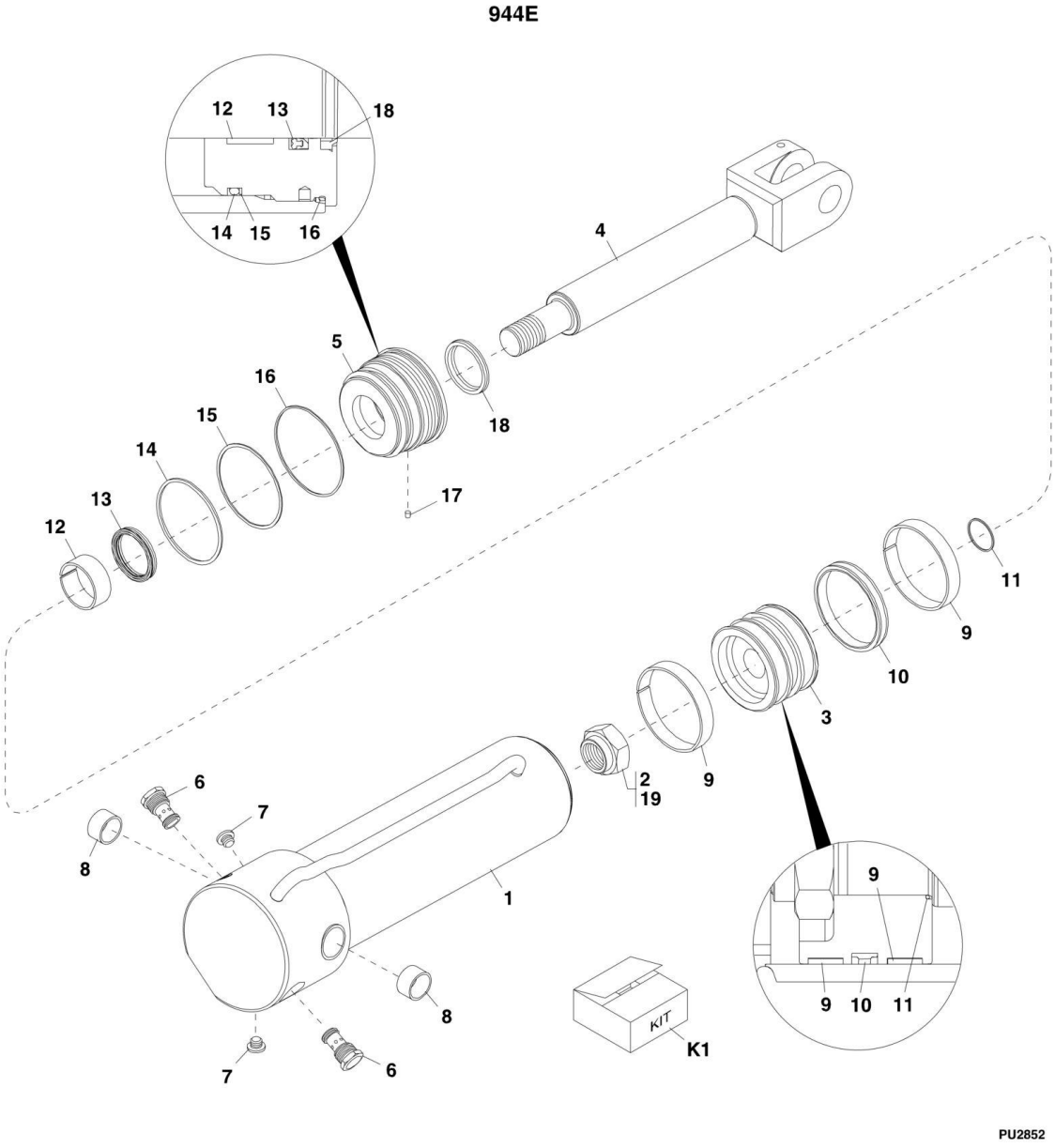

FIGURE 9-12. FRAME LEVEL CYLINDER (944E SN 0160004927 to Present, Including 0160004238 and 0160004239)

ITEM	PART NUMBER	QTY	DESCRIPTION	REV
	2717012	1	FRAME LEVEL CYLINDER, (includes items 1 thru 18)	AD
1	N.S.S.	1	WELDMENT TUBE	
2	8035322	1	HEX LOCKNUT, 1.50-12, (torque to 1840-2025 lb-ft)	
3	8035323	1	PISTON	
4	8036584	1	WELDMENT ROD	
5	8036585	1	HEAD GLAND, (torque to 300-400 lb-ft)	
6	8035757	2	PO CHECK VALVE - SERIES 10, (torque to 30-35 lb-ft)	
6	8036739	1	SEAL KIT	
7	8035785	2	HOLLOW HEX PLUG, #4, (loctite 243 and torque to 10-12 lb-ft)	
8	8036583	2	POLYLUBE JOURNAL BEARING	
9	Kit K1	2	PRECISION WEARBAND	
10	Kit K1	1	CAPPED T-SEAL, TYPE 730	
11	Kit K1	1	O-RING	
12	Kit K1	1	PRECISION WEARBAND	
13	Kit K1	1	DEEP Z-SEAL - WITH ROD BACK-UP	
14	Kit K1	1	O-RING	
15	Kit K1	1	BACK-UP RING	
16	Kit K1	1	O-RING	
17	Kit K1	1	LOCKING INSERT	
18	Kit K1	1	WIPER SEAL	
19	8526011	AR	LOCTITE 271, (apply to item 3)	
K1	8036477	1	SEAL KIT, (includes items 9 thru 18)	

FIGURE 9-13. STABIL-TRAK CYLINDER

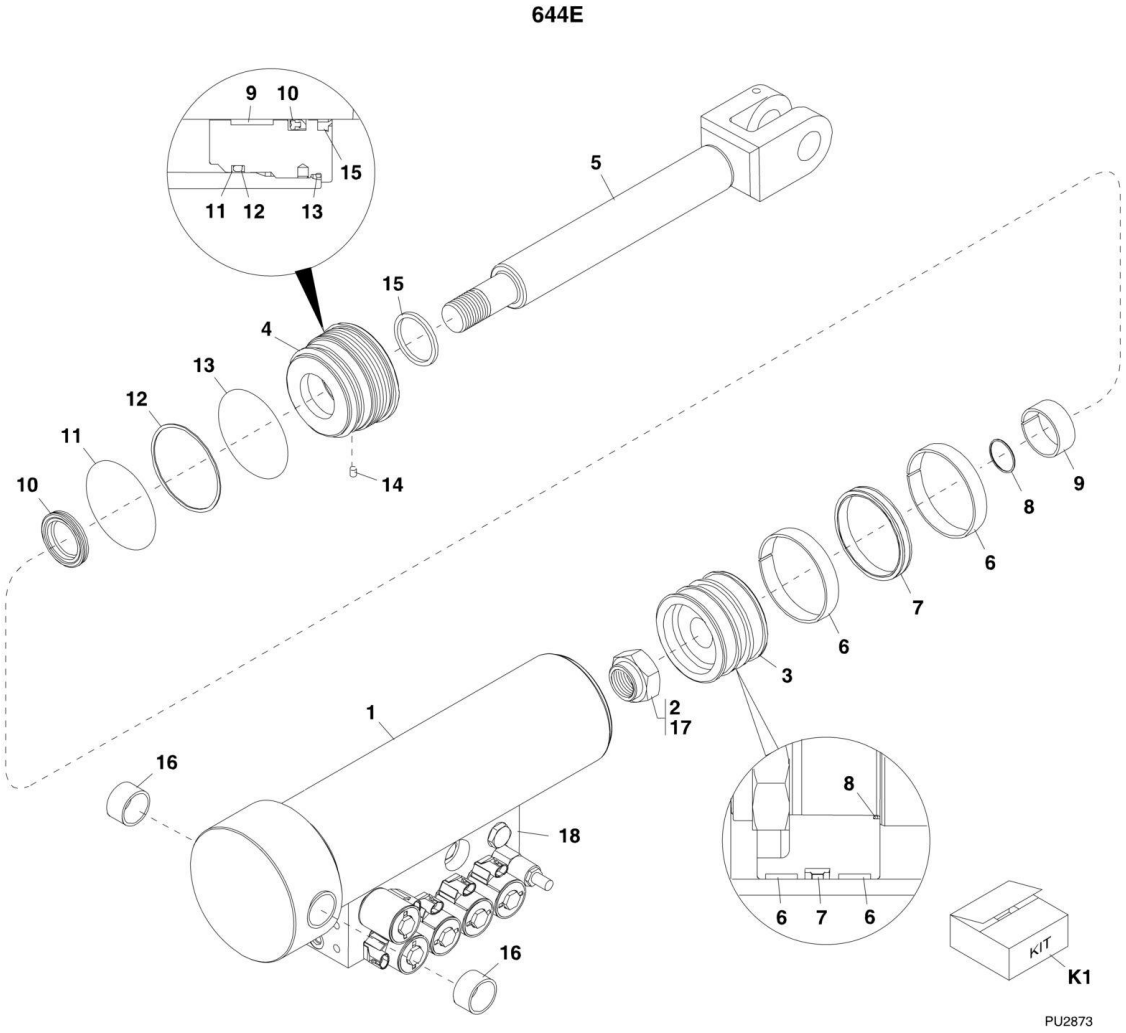

FIGURE 9-13. STABIL-TRAK CYLINDER

ITEM	PART NUMBER	QTY	DESCRIPTION	REV
	2717013	1	STABIL-TRAK CYLINDER, (includes items 1 thru 16 on STABIL-TRAK CYLINDER and all items on STABIL-TRAK CYLINDER VALVES)	AD
1	N.S.S.	1	WELDMENT TUBE	
2	8035322	1	LOCKNUT, 1.50-12, (loctite and torque to 1840-2025 lb-ft)	
3	8035323	1	PISTON	
4	8036585	1	HEAD GLAND, (torque to 300-400 lb-ft)	
5	8036584	1	WELDMENT ROD	
6	Kit K1	2	PRECISION WEARBAND	
7	Kit K1	1	CAPPED T-SEAL	
8	Kit K1	1	O-RING	
9	Kit K1	1	PRECISION WEARBAND	
10	Kit K1	1	DEEP Z-SEAL - WITH ROD BACK-UP	
11	Kit K1	1	O-RING	
12	Kit K1	1	DZR SEAL	
13	Kit K1	1	BACK-UP RING	
14	Kit K1	1	LOCKING INSERT	
15	Kit K1	1	WIPER SEAL	
16	8036583	2	POLYLUBE JOURNAL BEARING	
17	8526011	AR	LOCTITE 271, (apply to item 2)	
18		Ref	STABIL-TRAK CYLINDER VALVE, (See STABIL-TRAK CYLINDER VALVES for Breakdown)	
K1	8036477	1	SEAL KIT, (includes items 6 thru 15)	

FIGURE 9-14. STABIL-TRAK CYLINDER (944E SN 17569 through 20123, SN 0160002514 through 0160004849, Excluding 0160004238 and 0160004239)

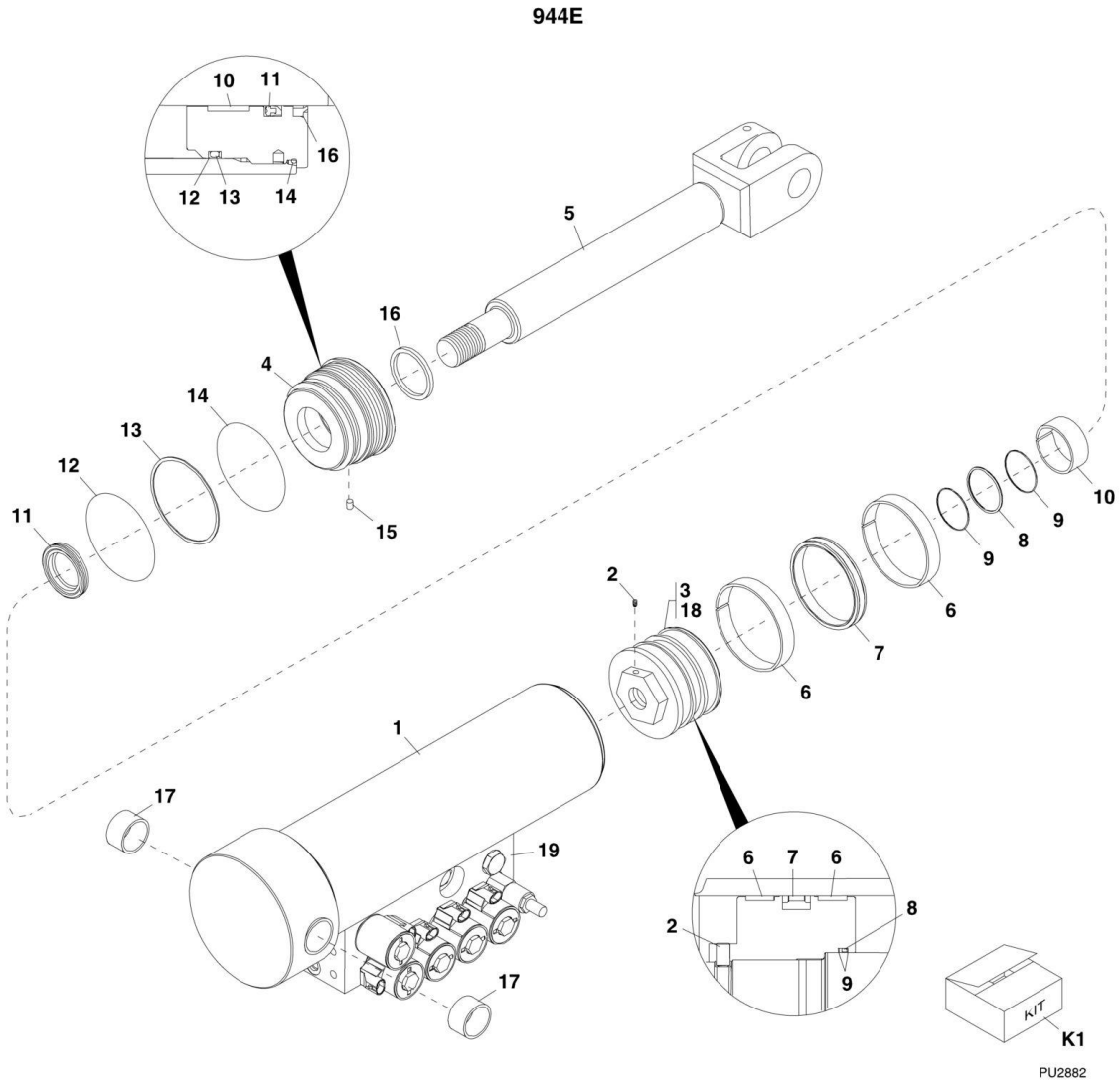

FIGURE 9-14. STABIL-TRAK CYLINDER (944E SN 17569 through 20123, SN 0160002514 through 0160004849, Excluding 0160004238 and 0160004239)

ITEM	PART NUMBER	QTY	DESCRIPTION	REV
	2716908	1	STABIL-TRAK CYLINDER, (includes items 1 thru 17 on STABIL-TRAK CYLINDER and all items on STABIL-TRAK CYLINDER VALVES)	AB
1	N.S.S.	1	WELDMENT TUBE	
2	8036633	1	SET SCREW, 3/8-16X.63	
3	8036636	1	PISTON, (loctite and torque to 1840-2025 lb-ft)	
4	8036635	1	HEAD GLAND, (torque to 300-400 lb-ft)	
5	8036634	1	WELDMENT ROD	
6	Kit K1	2	PRECISION WEARBAND	
7	Kit K1	1	CAPPED T-SEAL	
8	Kit K1	1	O-RING	
9	Kit K1	2	DYNAMIC BACKUP RING	
10	Kit K1	1	PRECISION WEARBAND	
11	Kit K1	1	DEEP Z-SEAL - WITH ROD BACK-UP	
12	Kit K1	1	O-RING	
13	Kit K1	1	DZR SEAL	
14	Kit K1	1	BACK-UP RING	
15	Kit K1	1	LOCKING INSERT	
16	Kit K1	1	WIPER SEAL	
17	8036583	1	POLYLUBE JOURNAL BEARING	
18	8525011	AR	LOCTITE 271, (apply to item 3)	
19		Ref	STABIL-TRAK CYLINDER VALVE, (See STABIL-TRAK CYLINDER VALVES for Breakdown)	
K1	8036550	1	SEAL KIT, (includes items 6 thru 16)	

FIGURE 9-15. STABIL-TRAK CYLINDER (944E SN 0160004927 to Present, Including 0160004238 and 0160004239)

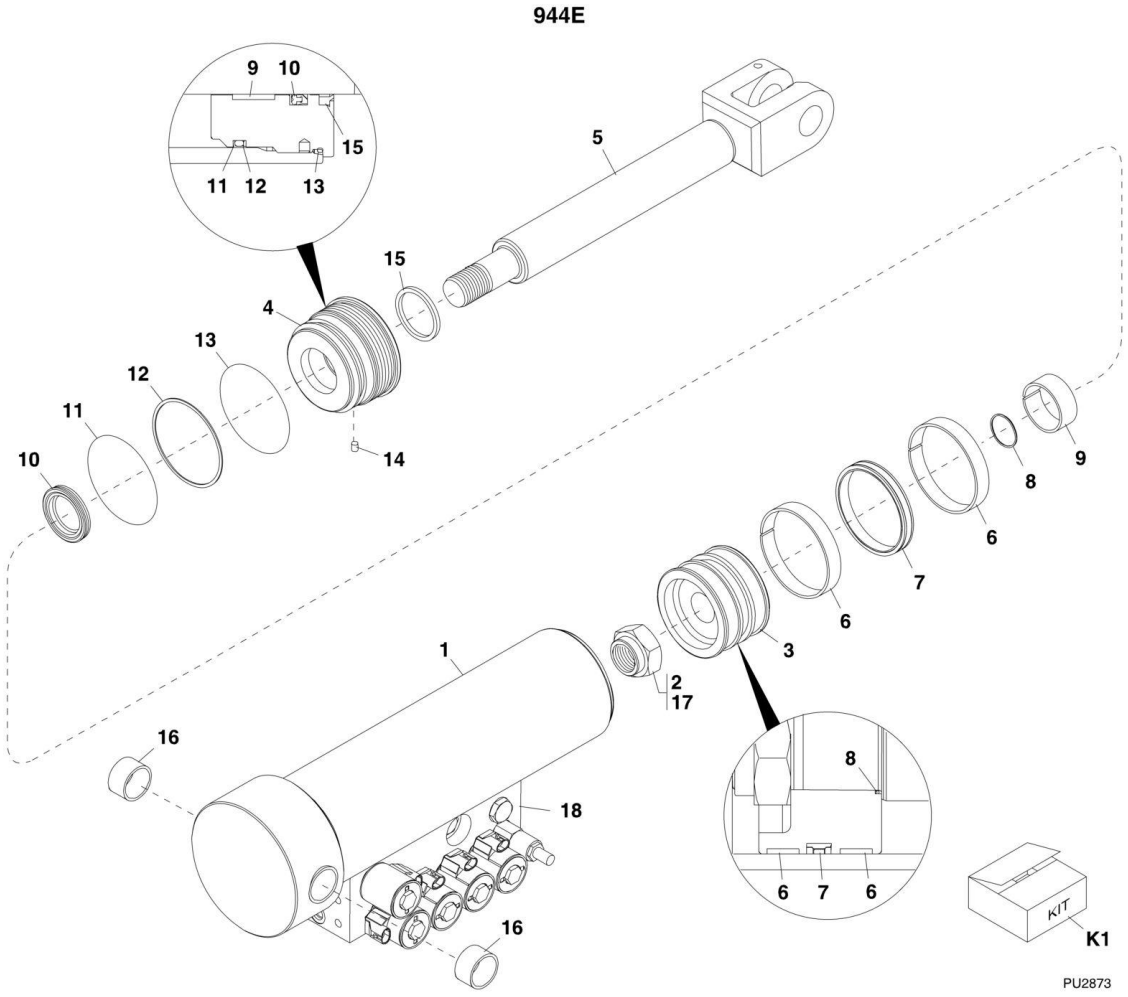

FIGURE 9-15. STABIL-TRAK CYLINDER (944E SN 0160004927 to Present, Including 0160004238 and 0160004239)

ITEM	PART NUMBER	QTY	DESCRIPTION	REV
	2717013	1	STABIL-TRAK CYLINDER, (includes items 1 thru 16 on STABIL-TRAK CYLINDER and all items on STABIL-TRAK CYLINDER VALVES)	AD
1	N.S.S.	1	WELDMENT TUBE	
2	8035322	1	LOCKNUT, 1.50-12, (loctite and torque to 1840-2025 lb-ft)	
3	8035323	1	PISTON	
4	8036585	1	HEAD GLAND, (torque to 300-400 lb-ft)	
5	8036584	1	WELDMENT ROD	
6	Kit K1	2	PRECISION WEARBAND	
7	Kit K1	1	CAPPED T-SEAL	
8	Kit K1	1	O-RING	
9	Kit K1	1	PRECISION WEARBAND	
10	Kit K1	1	DEEP Z-SEAL - WITH ROD BACK-UP	
11	Kit K1	1	O-RING	
12	Kit K1	1	DZR SEAL	
13	Kit K1	1	BACK-UP RING	
14	Kit K1	1	LOCKING INSERT	
15	Kit K1	1	WIPER SEAL	
16	8036583	2	POLYLUBE JOURNAL BEARING	
17	8526011	AR	LOCTITE 271, (apply to item 2)	
18		Ref	STABIL-TRAK CYLINDER VALVE, (See STABIL-TRAK CYLINDER VALVES for Breakdown)	
K1	8036477	1	SEAL KIT, (includes items 6 thru 15)	

FIGURE 9-16. TILT COMPENSATION CYLINDER 644E

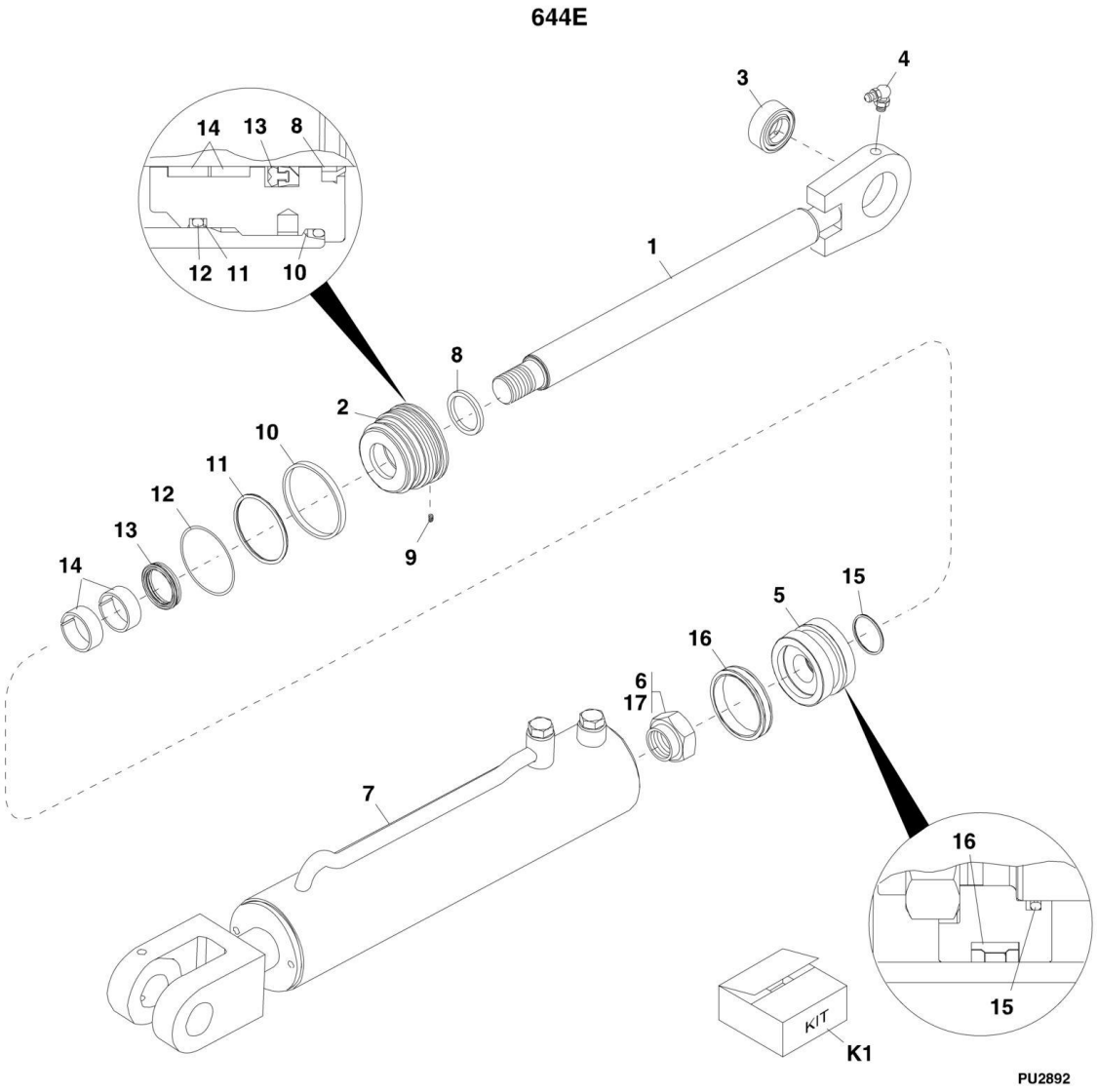

FIGURE 9-16. TILT COMPENSATION CYLINDER 644E

ITEM	PART NUMBER	QTY	DESCRIPTION	REV
	2716900	1	TILT COMPENSATION CYLINDER, (includes items 1 thru 16)	AC
1	8036600	1	WELDMENT ROD	
2	8035330	1	HEAD GLAND, (torque to 250-300 lb-ft)	
3	8036599	1	SPHERICAL BEARING WITH SEALS	
4	8520021	1	LUBE FITTING, 90, 1/8-27	
5	8035329	1	PISTON	
6	8037080	1	HEX LOCKNUT, 1-1/8-12, (loctite and torque to 445-515 lb-ft)	
7	Kit K1	1	TUBE	
8	Kit K1	1	WIPER SEAL	
9	Kit K1	1	LOCKING INSERT	
10	Kit K1	1	O-RING	
11	Kit K1	1	BACK-UP RING	
12	Kit K1	1	O-RING	
13	Kit K1	1	DEEP Z-SEAL - WITH ROD BACK-UP	
14	Kit K1	2	PRECISION WEARBAND	
15	Kit K1	1	O-RING	
16	Kit K1	1	PRECISION WEARBAND	
17	8526011	AR	LOCTITE 271, (apply to item 6)	
K1	8035332	1	SEAL KIT, (includes items 7 thru 16)	

FIGURE 9-17. TILT COMPENSATION CYLINDER 944E

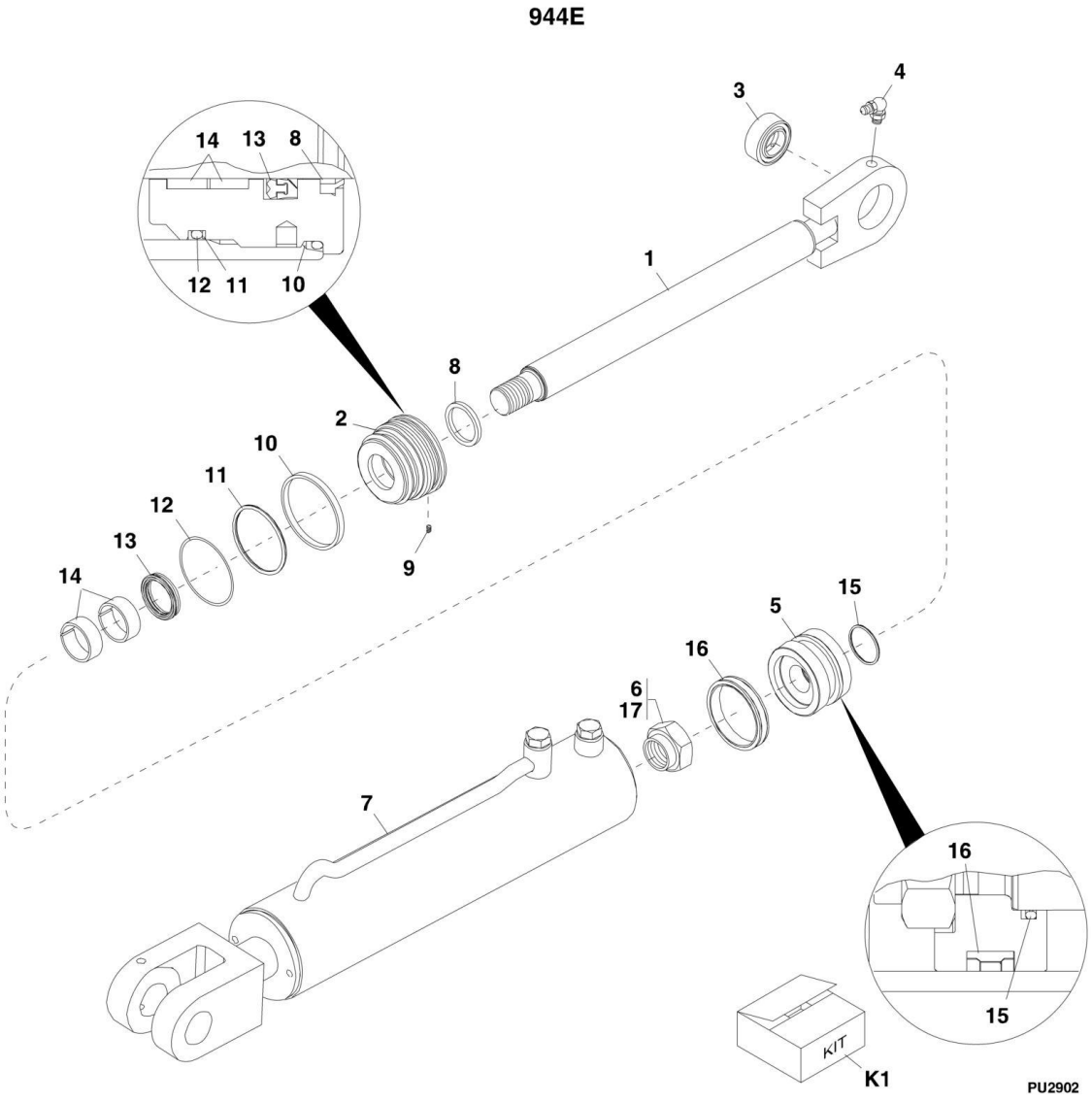

FIGURE 9-17. TILT COMPENSATION CYLINDER 944E

ITEM	PART NUMBER	QTY	DESCRIPTION	REV
	2716901	1	Tilt Compensation CYLINDER, (includes items 1 thru 16)	
1	8036641	1	WELDMENT ROD	
2	8036642	1	HEAD GLAND, (torque to 250-300 lb-ft)	
3	8036599	1	SPHERICAL BEARING WITH SEALS	
4	8520021	1	LUBE FITTING, 90, SELF TAP 1/8-27	
5	8036643	1	PISTON	
6	8035547	1	HEX LOCKNUT, 1-1/8-12, (loctite and torque to 590-625 lb-ft)	
7	Kit K1	1	TUBE	
8	Kit K1	1	WIPER SEAL	
9	Kit K1	1	LOCKING INSERT	
10	Kit K1	1	O-RING	
11	Kit K1	1	BACK-UP RING	
12	Kit K1	1	O-RING	
13	Kit K1	1	DEEP Z-SEAL - WITH ROD BACK-UP	
14	Kit K1	2	PRECISION WEARBAND	
15	Kit K1	1	O-RING	
16	Kit K1	1	PRECISION WEARBAND	
17	8526011	AR	LOCTITE 271, (apply to item 6)	
K1	8036551	1	SEAL KIT, (includes items 7 thru 16)	

FIGURE 9-18. TRANSFER CYLINDER

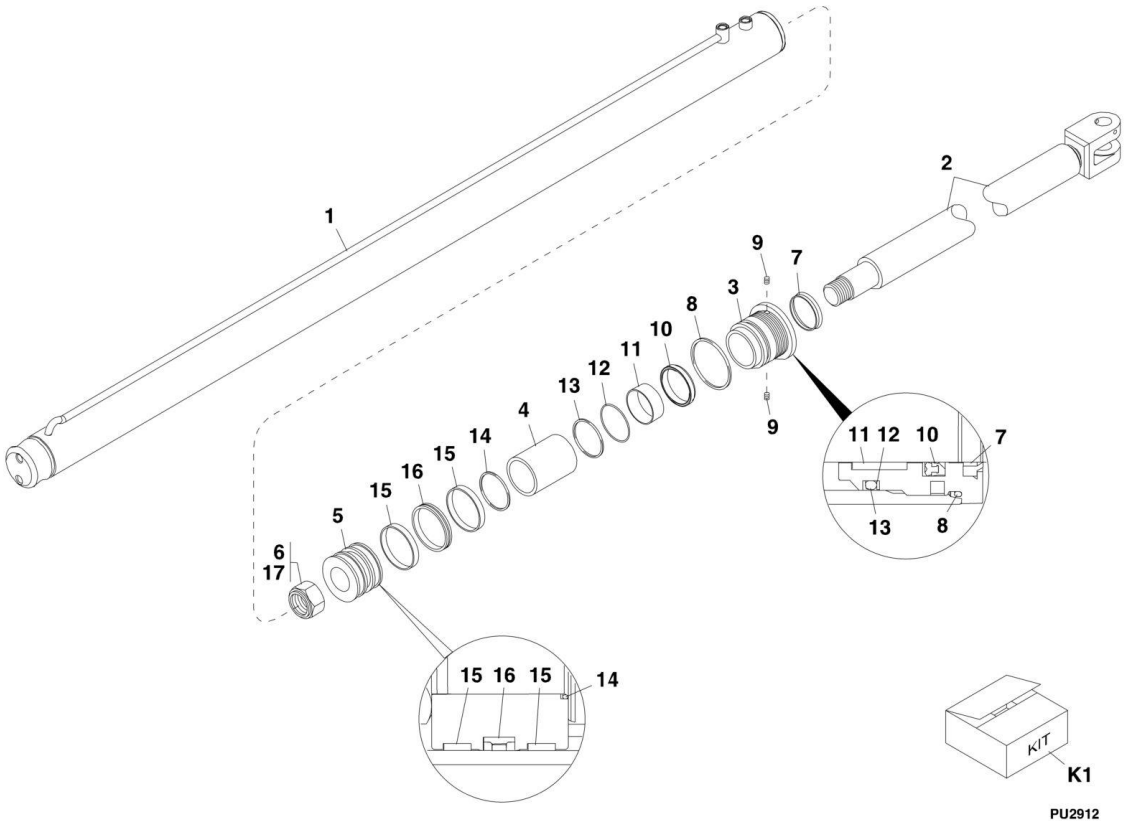

FIGURE 9-18. TRANSFER CYLINDER

ITEM	PART NUMBER	QTY	DESCRIPTION	REV
	2716850	1	TRANSFER CYLINDER, (includes items 1 thru 16)	AC
1	N.S.S.	1	WELDMENT TUBE	
2	8036586	1	WELDMENT ROD	
3	8036588	1	HEAD GLAND, (torque to 250-300 lb-ft)	
4	8036587	1	ROD SPACER	
5	8036589	1	PISTON	
6	8035322	1	LOCKNUT, 1.50-12, (loctite and torque to 500-550 lb-ft)	
7	Kit K1	1	WIPER SEAL	
8	Kit K1	1	O-RING	
9	Kit K1	2	LOCKING INSERT	
10	Kit K1	1	DZR SEAL	
11	Kit K1	1	PRECISION WEARBAND	
12	Kit K1	1	BACKUP RING	
13	Kit K1	1	O-RING	
14	Kit K1	1	O-RING	
15	Kit K1	2	PECISION WEARBAND	
16	Kit K1	1	CAPPED T-SEAL	
17	8526011	AR	LOCTITE 271	
K1	8036476	1	SEAL KIT, (includes items 7 thru 16)	

FIGURE 9-19. GEAR PUMP (644E Prior to SN 0160048717, Excluding 0160045421)

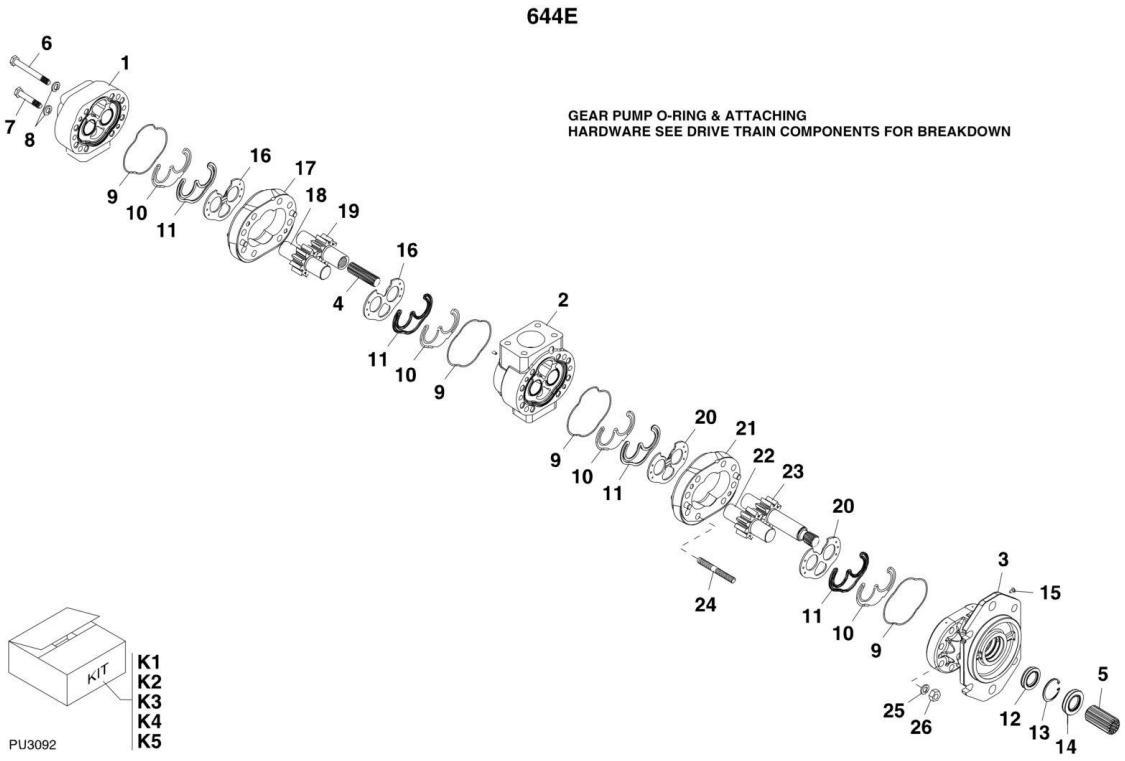

FIGURE 9-19. GEAR PUMP (644E Prior to SN 0160048717, Excluding 0160045421)

ITEM	PART NUMBER	QTY	DESCRIPTION	REV
	8440239	1	GEAR PUMP ASSY-TWO STAGE, (includes all items)	C
1	N.S.S.	1	REAR COVER	
2	N.S.S.	1	PORT SECTION	
3	N.S.S.	1	"C" MOUNT FRONT COVER	
4	8036485	1	COUPLING	
5	8036541	1	"C" SPLINE COUPLING	
6	Kit K2	4	BOLT, 7/16-14X3.75	
7	Kit K2	4	BOLT, 7/16-14X2.75	
8	Kit K2	8	LOCKWASHER, 7/16	
9	Kit K1	4	O-RING	
10	Kit K1	4	E-RING	
11	Kit K1	4	RETAINING RING	
12	Kit K1	1	INNER SHAFT SEAL	
13	Kit K1	1	SNAP RING	
14	Kit K1	1	OUTER SHAFT SEAL	
15	Kit K1	1	WEEP HOLE PLUG	
16	Kit K3	2	WEAR PLATE	
17	Kit K3	1	CENTER SECTION	
18	Kit K3	1	DRIVEN GEAR	
19	Kit K3	1	REAR DRIVE GEAR	
20	Kit K4	2	WEAR PLATE	
21	Kit K4	1	CENTER SECTION	
22	Kit K4	1	DRIVEN GEAR	
23	Kit K4	1	"B" SPLINE DRIVE GEAR	
24	Kit K5	8	STUD, 7/16X3.51	
25	Kit K5	8	LOCKWASHER, 7/16	
26	Kit K5	8	NUT, 7/16-20X3/8	
K1	8036481	1	GEAR PUMP SEAL KIT, (includes items 9 thru 15)	
K2	8036513	1	BOLT KIT, (includes items 6 thru 8)	
K3	8036524	1	REAR SECTION KIT, (includes items 16 thru 19)	
K4	8036483	1	FRONT SECTION KIT, (includes items 20 thru 23)	
K5	8036484	1	FRONT STUD KIT, (includes items 24 thru 26)	

FIGURE 9-20. GEAR PUMP (Prior to SN 0160041827)

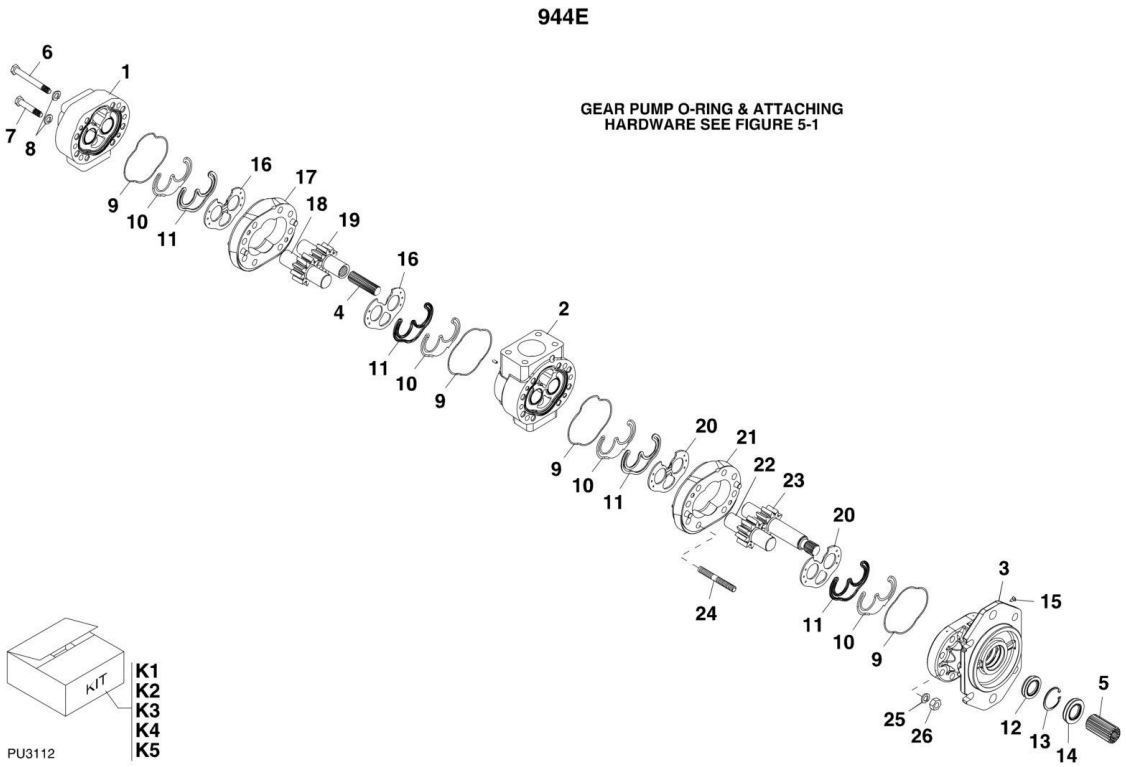

FIGURE 9-20. GEAR PUMP (Prior to SN 0160041827)

ITEM	PART NUMBER	QTY	DESCRIPTION	REV
	8440240	1	GEAR PUMP ASSY-TWO STAGE, (includes all items)	C
1	N.S.S.	1	REAR COVER	
2	N.S.S.	1	PORT SECTION	
3	70023033	1	"C" MOUNT FRONT COVER	
4	8036485	1	COUPLING	
5	8036541	1	"C" SPLINE COUPLING	
6	Kit K2	4	BOLT, 7/16-14X4.00	
7	Kit K2	4	BOLT, 7/16-14X2.75	
8	Kit K2	8	LOCKWASHER, 7/16	
9	Kit K1	4	O-RING	
10	Kit K1	4	E-RING	
11	Kit K1	4	RETAINING RING	
12	Kit K1	1	INNER SHAFT SEAL	
13	Kit K1	1	SNAP RING	
14	Kit K1	1	OUTER SHAFT SEAL	
15	Kit K1	1	WEEP HOLE PLUG	
16	Kit K3	2	WEAR PLATE	
17	Kit K3	1	CENTER SECTION	
18	Kit K3	1	DRIVEN GEAR	
19	Kit K3	1	REAR DRIVE GEAR	
20	Kit K4	2	WEAR PLATE	
21	Kit K4	1	CENTER SECTION	
22	Kit K4	1	DRIVEN GEAR	
23	Kit K4	1	"B" SPLINE DRIVE GEAR	
24	Kit K5	8	STUD, 7/16X3.51	
25	Kit K5	8	LOCKWASHER, 7/16	
26	Kit K5	8	NUT, 7/16-20X3/8	
K1	8036481	1	GEAR PUMP SEAL KIT, (includes items 9 thru 15)	
K2	8036480	1	BOLT KIT, (includes items 6 thru 8)	
K3	8036482	1	REAR SECTION KIT, (includes items 16 thru 19)	
K4	8036483	1	FRONT SECTION KIT, (includes items 20 thru 23)	
K5	8036484	1	FRONT STUD KIT, (includes items 24 thru 26)	

FIGURE 9-21. GEAR PUMP (SN 0160041827 through 0160046530)

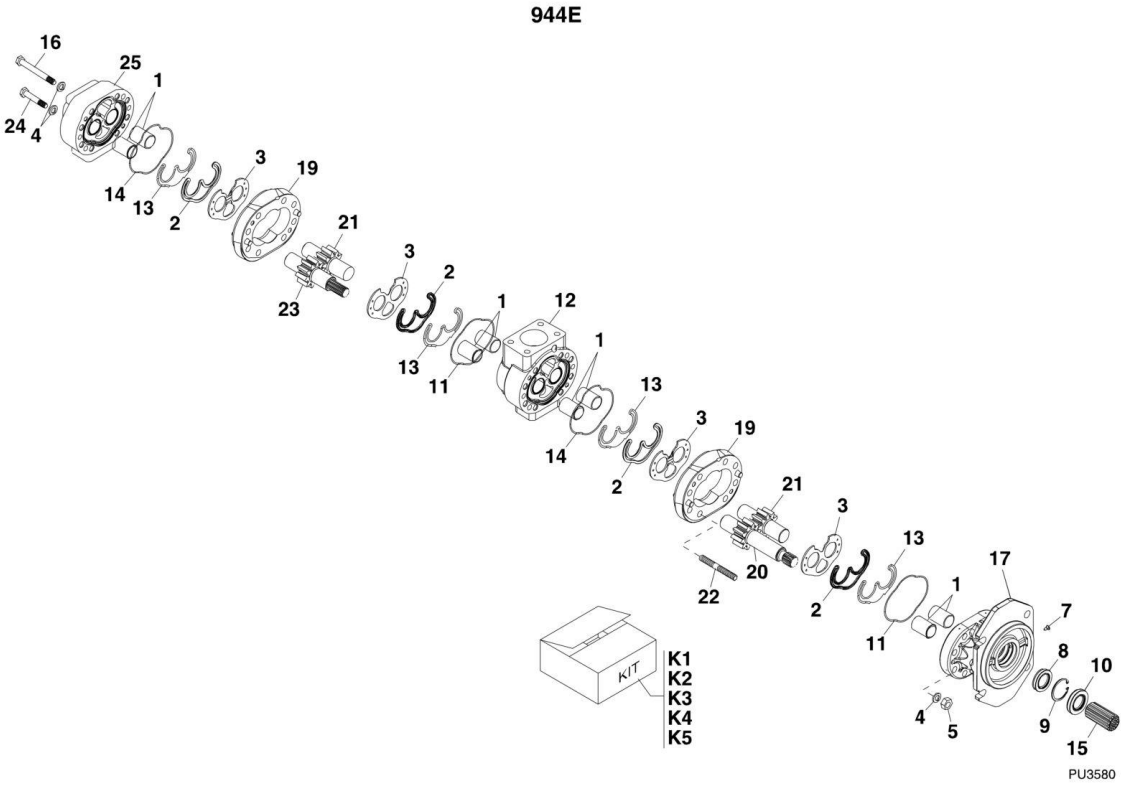

FIGURE 9-21. GEAR PUMP (SN 0160041827 through 0160046530)

ITEM	PART NUMBER	QTY	DESCRIPTION	REV
	1001112244	1	GEAR PUMP, (includes all items)	B
1	N.S.S.	8	BUSHING	
2	Kit K1	4	RETAINING RING	
3	7029186	4	WEAR PLATE	
4	7029195	16	LOCKWASHER, 7/16	
5	7029196	8	HEX NUT, 7/16, GR8	
6	N.S.S.	2	DRIVESCREW, (not shown)	
7	Kit K1	1	WEEP HOLE PLUG	
8	Kit K1	1	INNER SHAFT SEAL	
9	Kit K1	1	SNAP RING	
10	Kit K1	1	OUTER SHAFT SEAL	
11	Kit K1	2	O-RING	
12	N.S.S.	1	PORT SECTION	
13	Kit K1	4	E-RING	
14	Kit K1	2	O-RING	
15	8036541	1	"C" SPLINE COUPLING	
16	Kit K2	4	HEX HD CAPSCREW, 4/16-14X4	
17	70023033	1	"C" MOUNT FRONT COVER	
18	N.S.S.	1	SN PLATE, (not shown)	
19	Kit K3 or K4	2	CENTER SECTION	
20	Kit K4	1	DRIVE SHAFT	
21	Kit K3 or K4	2	DRIVEN GEAR	
22	Kit K5	8	STUD, 7/16-14X3.68	
23	Kit K3	1	REAR DRIVE GEAR	
24	Kit K2	4	HEX HD CAPSCREW, 7/16-14X3	
25	N.S.S.	1	REAR COVER	
K1	8036481	1	GEAR PUMP SEAL KIT, (includes items 2, 7 thru 11 & 13 thru 15)	
K2	8036480	1	BOLT KIT, (includes items 4, 16 & 24)	
K3	8036482	1	REAR SECTION KIT, (includes items 3, 19, 21 & 23)	
K4	8036483	1	FRONT SECTION KIT, (includes items 3, 19, 20 & 21)	
K5	8036484	1	FRONT STUD KIT, (includes items 4, 5 & 22)	

FIGURE 9-22. GEAR PUMP (644E SN 0160048717 to Present, Including 0160045421; 944E SN 0160046623 to Present)

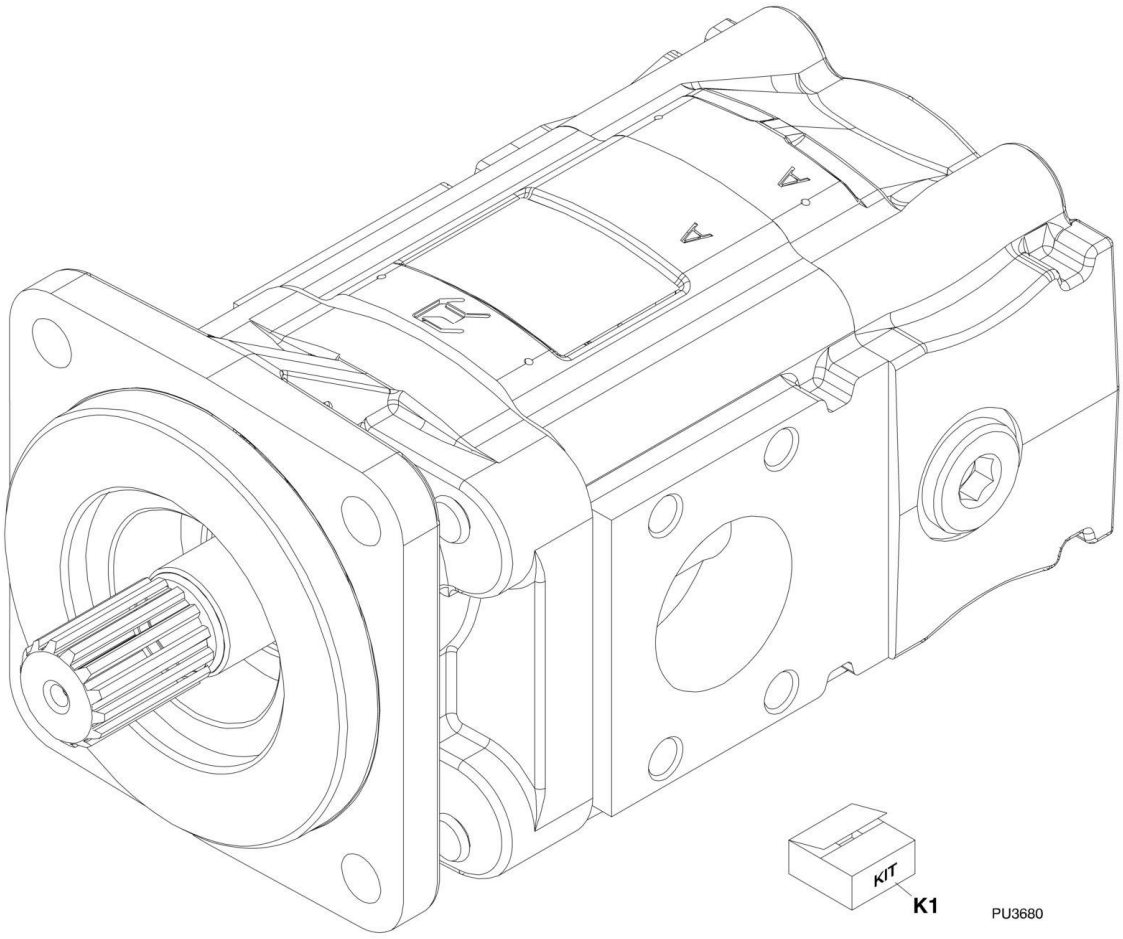

FIGURE 9-22. GEAR PUMP (644E SN 0160048717 to Present, Including 0160045421; 944E SN 0160046623 to Present)

ITEM	PART NUMBER	QTY	DESCRIPTION	REV
	1001135555	1	GEAR PUMP, (644E)	A
	1001135553	1	GEAR PUMP, (944E)	B
K1		Ref	SEAL KIT	

FIGURE 9-23. MAIN CONTROL VALVE (644E SN 17569 through 20123, SN 0160002514 through 0160003074; 944E SN 17569 through 20123, SN 0160002514 through 0160003090)

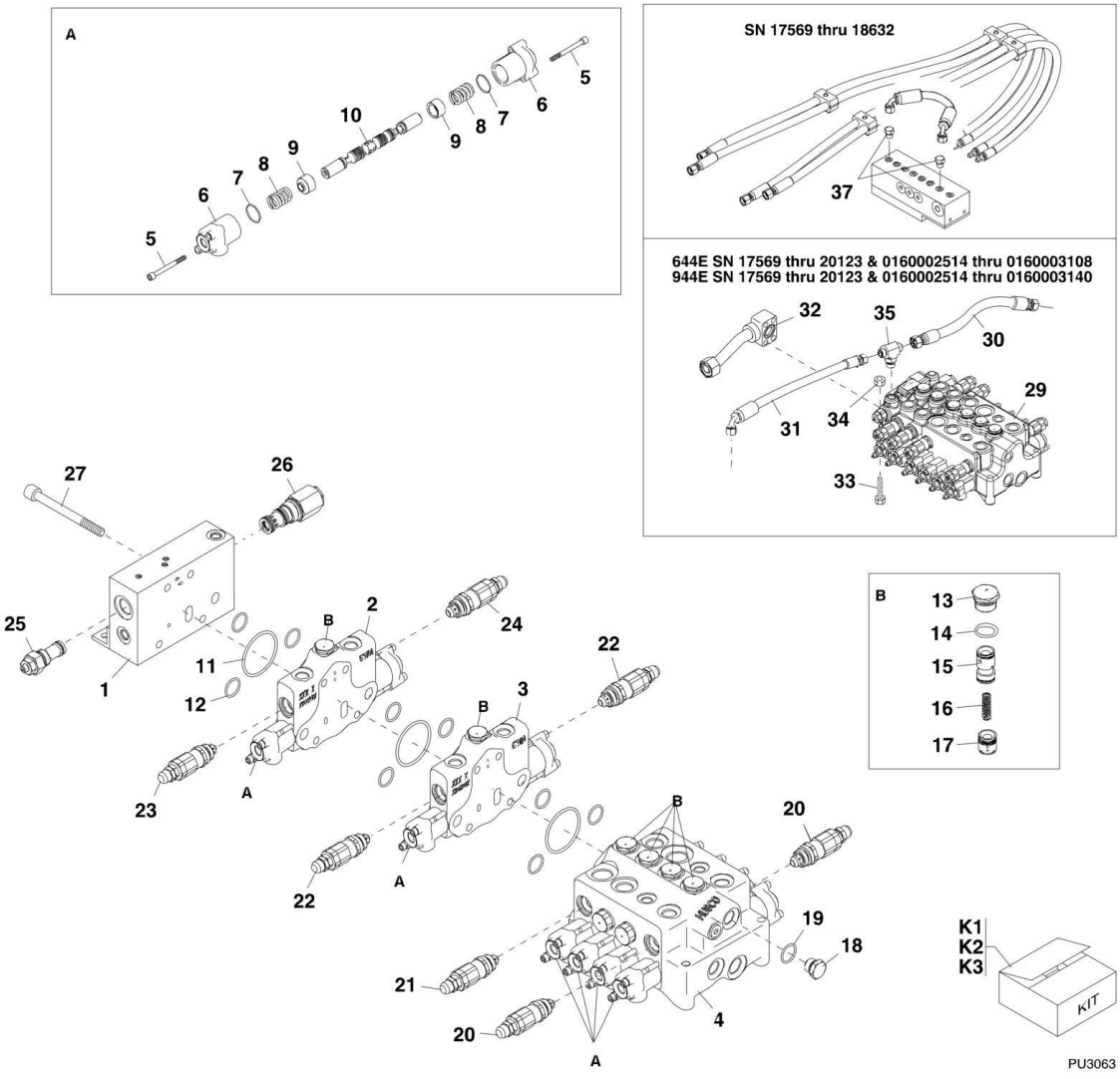

FIGURE 9-23. MAIN CONTROL VALVE (644E SN 17569 through 20123, SN 0160002514 through 0160003074; 944E SN 17569 through 20123, SN 0160002514 through 0160003090)

ITEM	PART NUMBER	QTY	DESCRIPTION	REV
	8902328	NLA	MAIN CONTROL VALVE ASSY, (no longer available, use Kit K3 for replacement), (includes items 1 thru 27)	
1	N.S.S.	1	INLET SECTION ASSY	
2	8036510	1	TRANSFER CARRIAGE SECTION ASSY, (includes items 5 thru 17)	
3	8036511	1	AUXILIARY SECTION ASSY, (includes items 5 thru 17)	
4	N.S.S.	1	LIFT/LOWER, EXTEND/RETRACT, FRAME SWAY AND ATTACHMENT TILT MONO BLOCK	
5	Kit K1	2	SOCKET HD CAPSCREW	
6	Kit K1	1	SPOOL CAP	
7	10837924	1	O-Ring	
8	Kit K1	1	SPRING	
9	Kit K1	1	SPRING SEAT	
10	N.S.S.	1	SPOOL	
11	Kit K2	3	O-RING	
12	Kit K2	9	O-RING	
13	8036512	6	PLUG ASSY, (includes item 14)	
14	8036513	6	O-Ring	
15	N.S.S.	6	SPOOL-ISOLATOR	
16	8036514	6	SPRING	
17	N.S.S.	6	SPOOL-COMPENSATOR	
18	8036516	1	PLUG, (includes item 19)	
19	8036517	1	O-Ring	
20	8036523	2	RELIEF CARTRIDGE, 4000 PSI, (275 Bar)	
20	8035855	1	SEAL KIT	
21	8036519	1	RELIEF CARTRIDGE, 2400 PSI, (165 Bar)	
21	8036185	1	SEAL KIT	
22	8036520	2	RELIEF CARTRIDGE, 2650 PSI, (182 Bar)	
22	8036185	1	SEAL KIT	
23	8036521	1	RELIEF CARTRIDGE, 3700 PSI, (255 Bar)	
23	8036185	1	SEAL KIT	
24	8036518	1	RELIEF CARTRIDGE, 2180 PSI, (150 Bar)	
24	8036185	1	SEAL KIT	
25	8036507	1	REGULATOR ASSY, 3275 PSI, (226 bar)	
25	8036508	1	SEAL KIT	
26	8036505	1	UNLOADER CARTRIDGE ASSY	
26	8036506	1	SEAL KIT	
27	8036509	4	SOCKET HD CAPSCREW, (metric)	
28	4150512	1	MAIN VALVE SERVICE KIT PROCEDURE, (not shown)	
29	8902329	1	PILOT ACCUATION MAIN CONTROL VALVE ASSY	
30	2717193	1	HOSE ASSY	
31	2717194	1	HOSE ASSY	
32	7301843	1	PUMP TEE TUBE ASSY	
33	8303550	1	HEX HD CAPSCREW, M8X60, GR8.8	
34	8305654	1	HEX LOCKNUT, M8X1.25	
35	8770112	1	BRANCH TEE	
36	7301831	1	INSTRUCTION SHEET FOR REPLACING JUMPER LOOP HOSE WITH PRESSURE BLEED PLUGS, (not shown) **(SN 17569 through 18633)**	
37	7301301	2	PRESSURE BLEED PLUG **(SN 17569 through 18633)**	

SECTION 9 - HYDRAULIC COMPONENTS

ITEM	PART NUMBER	QTY	DESCRIPTION	REV
K1	8036515	12	SPOOL CAP KIT, (includes items 5 thru 9)	
K2	8036503	1	SECTION ASSEMBLIES SEAL KIT, (includes items 11 & 12)	
K3	2915007	1	MAIN CONTROL VALVE REPLACEMENT KIT, (includes items 28 thru 37), (one time replacement only)	

FIGURE 9-24. MAIN CONTROL VALVE (644E SN 0160003088 to Present; 944E SN 0160003092 to Present)

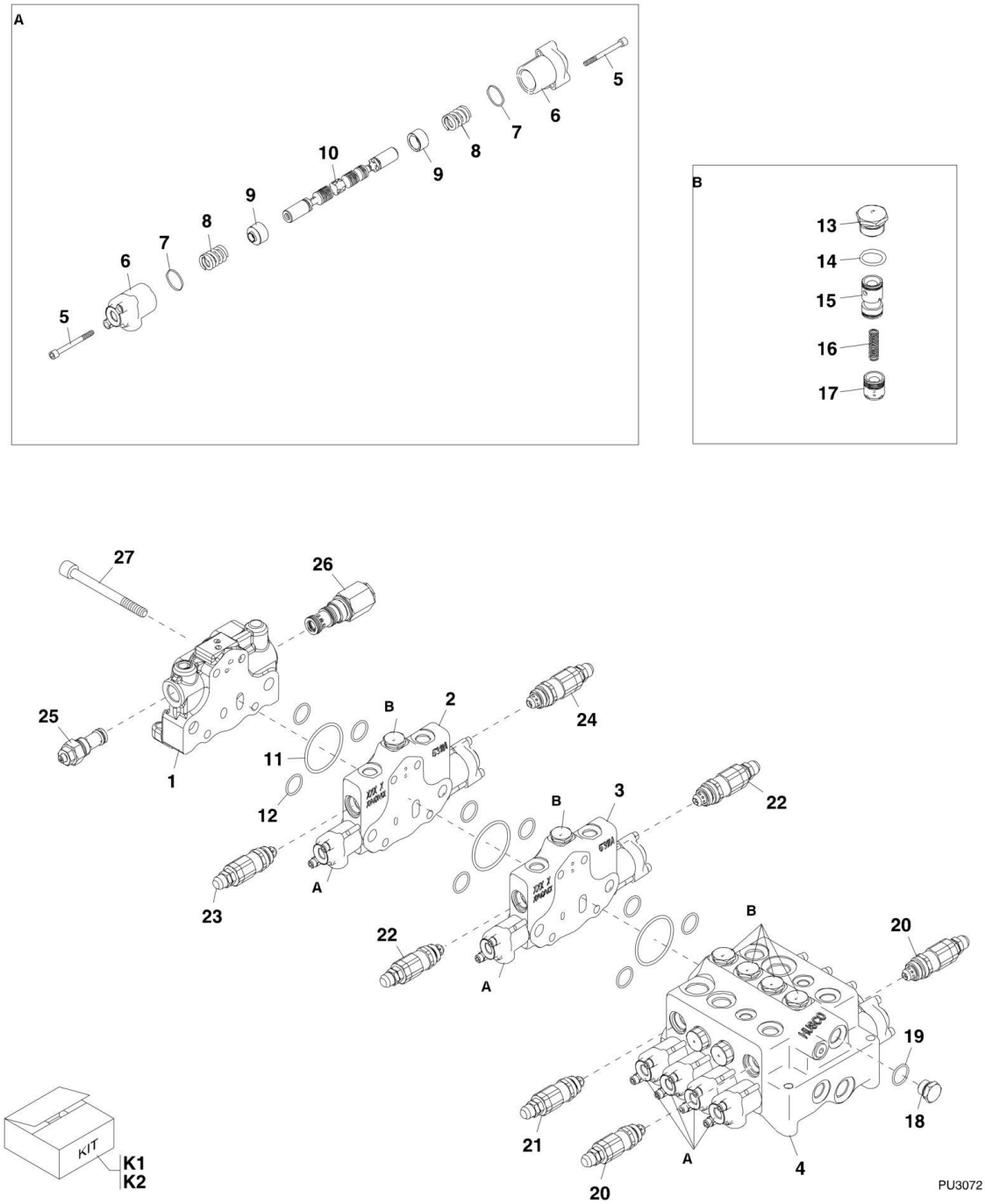

FIGURE 9-24. MAIN CONTROL VALVE (644E SN 0160003088 to Present; 944E SN 0160003092 to Present)

ITEM	PART NUMBER	QTY	DESCRIPTION	REV
	8902329	1	MAIN CONTROL VALVE ASSY, (includes all items)	
1	8036787	1	INLET SECTION ASSY, (includes item 26)	
2	8036510	1	TRANSFER CARRIAGE SECTION ASSY, (includes items 5 thru 17)	
3	8036511	1	AUXILIARY SECTION ASSY, (includes items 5 thru 17)	
4	N.S.S.	1	LIFT/LOWER, EXTEND/RETRACT, FRAME SWAY AND ATTACHMENT TILT MONO BLOCK	
5	Kit K1	2	SOCKET HD CAPSCREW	
6	Kit K1	1	SPOOL CAP	
7	10837924	1	O-Ring	
8	Kit K1	1	SPRING	
9	Kit K1	1	SPRING SEAT	
10	N.S.S.	1	SPOOL	
11	Kit K2	3	O-RING	
12	Kit K2	9	O-RING	
13	8036512	6	PLUG ASSY, (includes item 14)	
14	8036513	6	O-Ring	
15	N.S.S.	6	SPOOL-ISOLATOR	
16	8036514	6	SPRING	
17	N.S.S.	6	SPOOL-COMPENSATOR	
18	8036516	1	PLUG, (includes item 19)	
19	8036517	1	O-Ring	
20	8036523	2	RELIEF CARTRIDGE, 4000 PSI, (275 Bar)	
20	8035855	1	SEAL KIT	
21	8036519	1	RELIEF CARTRIDGE, 2400 PSI, (165 Bar)	
21	8036185	1	SEAL KIT	
22	8036520	2	RELIEF CARTRIDGE, 2650 PSI, (182 Bar)	
22	8036185	1	SEAL KIT	
23	8036521	1	RELIEF CARTRIDGE, 3700 PSI, (255 Bar)	
23	8036185	1	SEAL KIT	
24	8036518	1	RELIEF CARTRIDGE, 2180 PSI, (150 Bar)	
24	8036185	1	SEAL KIT	
25	8036507	1	REGULATOR ASSY, 3275 PSI, (226 bar)	
25	8036508	1	SEAL KIT	
26	8036505	1	UNLOADER CARTRIDGE ASSY	
26	8036506	1	SEAL KIT	
27	8036509	4	SOCKET HD CAPSCREW, (metric)	
K1	8036515	12	SPOOL CAP KIT, (includes items 5 thru 9)	
K2	8036503	1	SECTION ASSEMBLIES SEAL KIT, (includes items 11 & 12)	

FIGURE 9-25. PILOT SELECT VALVE ASSEMBLY, (DUAL JOYSTICK)

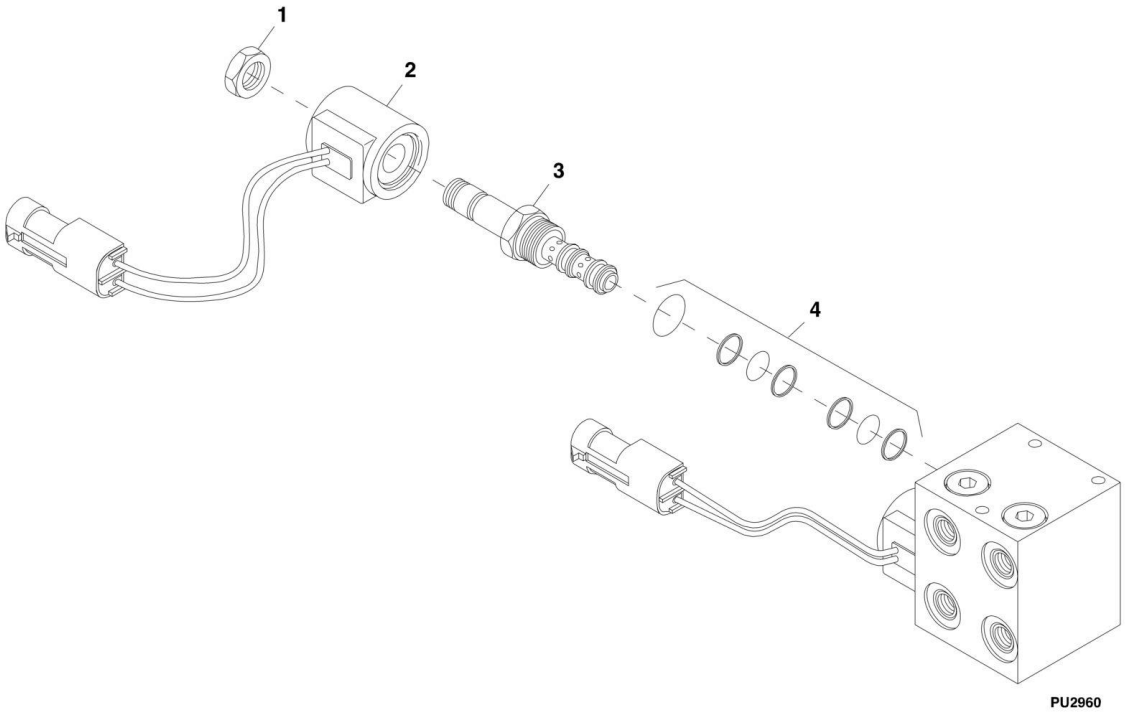

FIGURE 9-25. PILOT SELECT VALVE ASSEMBLY, (DUAL JOYSTICK)

ITEM	PART NUMBER	QTY	DESCRIPTION	REV
	10339076	1	PILOT SELECT VALVE - DUAL JOYSTICK, (includes all items)	AA
1	10740662	2	NUT	
2	10138329	2	COIL	
3	7012941	2	SOLENOID VALVE	
4	7010543	2	SEAL KIT	

FIGURE 9-26. PILOT SELECT VALVE ASSEMBLY, (SINGLE JOYSTICK)

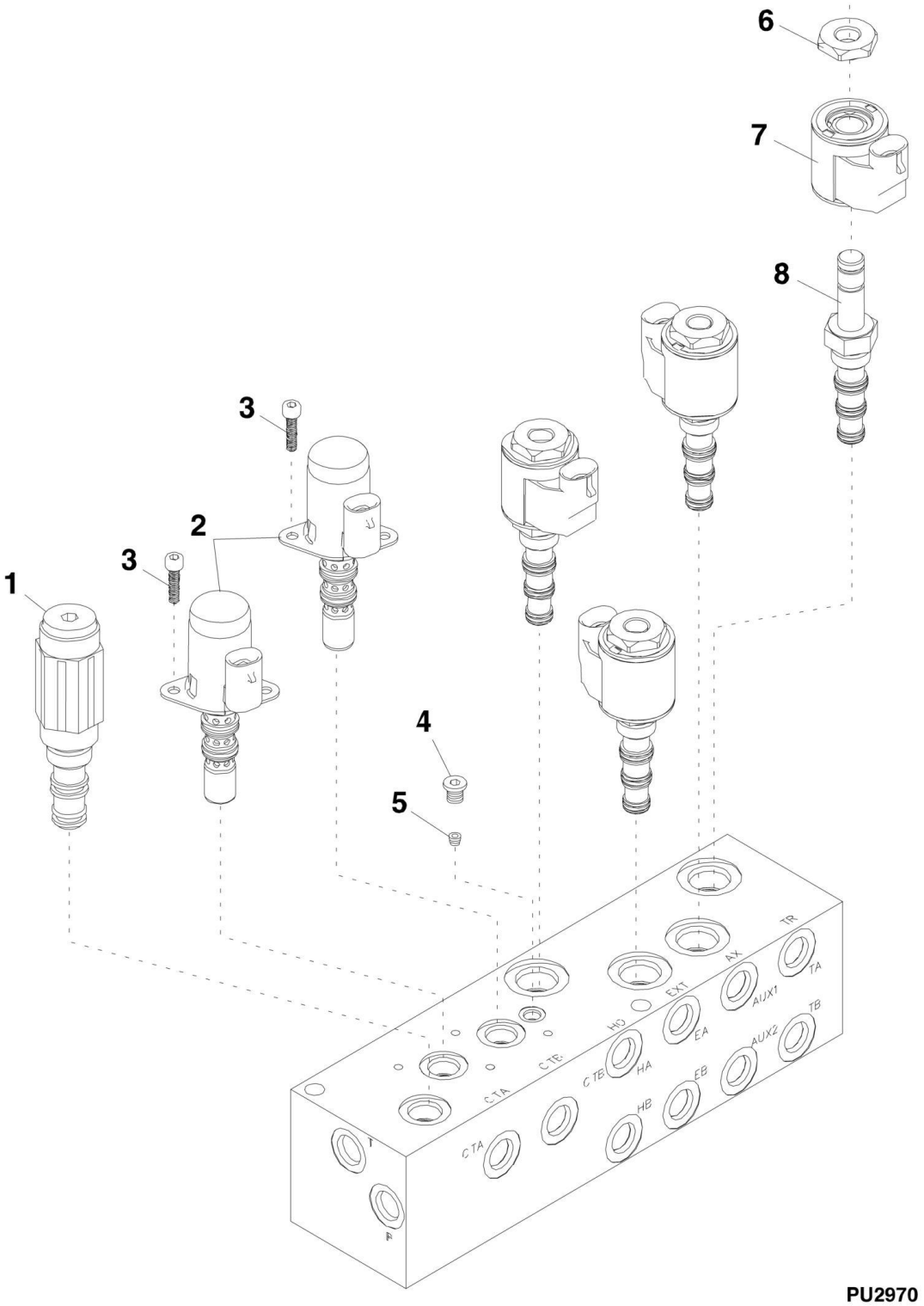

FIGURE 9-26. PILOT SELECT VALVE ASSEMBLY, (SINGLE JOYSTICK)

ITEM	PART NUMBER	QTY	DESCRIPTION	REV
	8902317	1	PILOT SELECT VALVE - SINGLE JOYSTICK, (includes all items)	
1	8036647	1	PRESSURE REDUCING/RELIEVING VALVE, 425 PSI, (29.3 bar)	
1	8036648	1	SEAL KIT	
2	8036649	2	PROP PRESSURE REDUCING/RELIEVING VALVE	
2	8036650	1	SEAL KIT	
3	8036651	4	SOCKET HD CAPSCREW, M5X8	
4	7017406	1	HOLLOW HEX PLUG, #4	
5	8036652	1	ORIFICE PLUG, 1/16X.020 DIA	
6	8036574	4	SPECIAL NUT	
7	8036573	4	COIL SOLENOID WITH INTEGRATED DIODE	
8	1101244	4	SOLENOID VALVE, 2 POSITION 4 WAY	
8	7017402	1	SEAL KIT	

FIGURE 9-27. ACCUMULATOR CHARGE VALVE ASSEMBLY

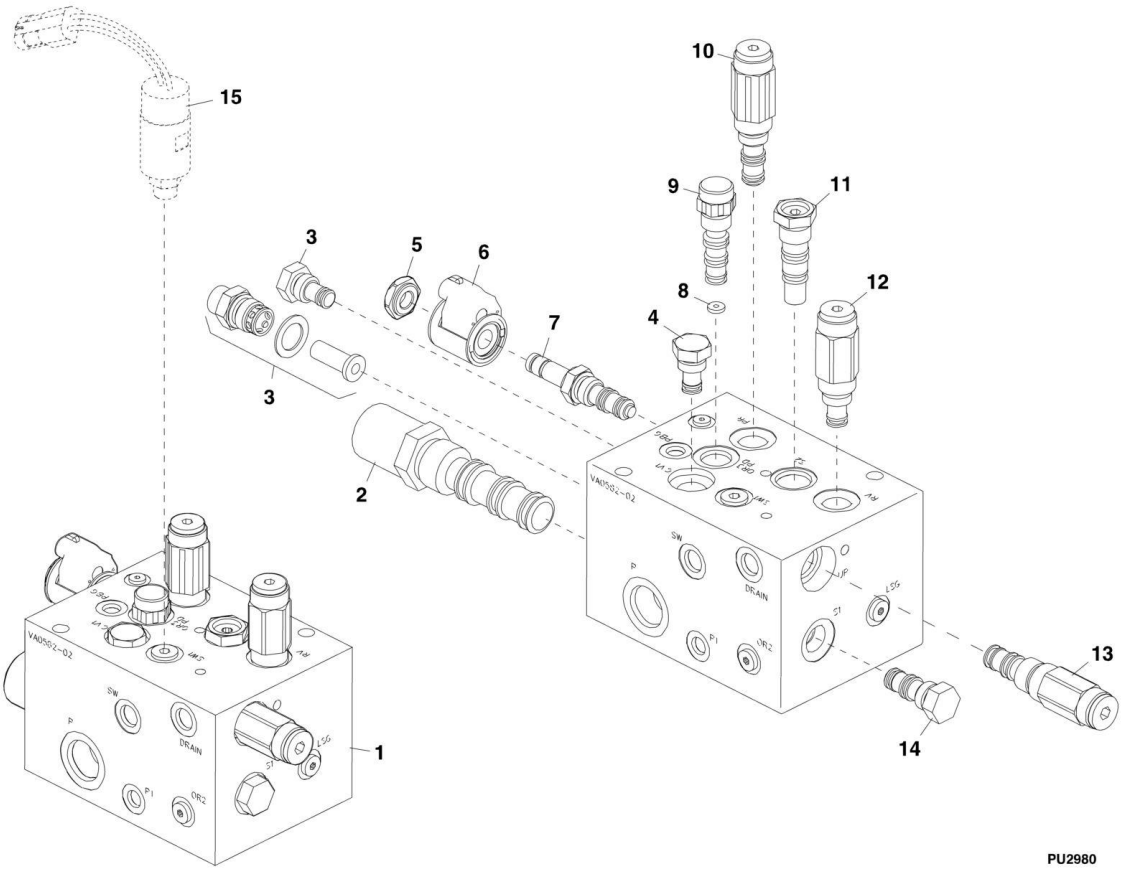

FIGURE 9-27. ACCUMULATOR CHARGE VALVE ASSEMBLY

ITEM	PART NUMBER	QTY	DESCRIPTION	REV
1	8902313	1	ACCUMULATOR CHARGE/SECONDARY FUNCTION VALVE	
1	1001103491	1	ACCUMULATOR CHARGE/SECONDARY FUNCTION VALVE **(644E SN 0160039830 to Present, Including 0160036724; 944E SN 0160040124 to Present, Including 0160034634, 0160036710, 0160036722, 0160036735 and 0160036738; Including 644E;0160036811, 644E;0160036907 and 644E;016003701)**	
2	8036460	1	LOAD SENSE COMPENSATOR, 150 PSI, (10 bar), (torque to 75-80 lb-ft)	
2	8036493	1	SEAL KIT	
3	8036564	1	FILTER ASSY	
3	8036565	1	SEAL KIT	
4	8033769	2	CHECK VALVE CARTRIDGE, 4 PSI, (0.3 bar)	
4	10868086	1	SEAL KIT	
4	7010543	1	SEAL KIT **(644E SN 0160039830 to Present, Including 0160036724, 0160036811, 0160036907 and 0160037012; 944E SN 0160040124 to Present, Including 0160034634, 0160036710, 0160036722, 0160036735 and 0160036738)**	
5	8036574	1	SPECIAL NUT	
6	8036573	1	SOLENOID WITH INTERGRATED DIODE COIL, (park brake solenoid)	
7	10837352	1	SOLENOID CARTRIDGE, 2 POSITION, 3 WAY	
7	7012941	1	SOLENOID CARTRIDGE, 2 POSITION, 3 WAY **(644E SN 40160039830 to Present, Including 0160036724, 0160036811, 0160036907 and 0160037012; 944E SN 0160040124 to Present, Including 0160034634, 0160036710, 0160036722, 0160036735 and 0160036738)**	
7	10868086	1	SOLENOID CARTRIDGE SEAL KIT	
7	7010543	1	SEAL KIT **(644E SN 0160039830 to Present, Including 0160036724, 0160036811, 0160036907 and 0160037012; 944E SN 0160040124 to Present, Including 0160034634, 0160036710, 0160036722, 0160036735 and 0160036738)**	
8	8036457	1	ORIFICE DISC, 0.032	
9	8036456	1	PILOT DIRECTIONAL CARTRIDGE, 2 POSITION, 3 WAY	
9	10868902	1	SEAL KIT	
9	7017402	1	SEAL KIT **(644E SN 0160039830 to Present, Including 0160036724, 0160036811, 0160036907 and 0160037012; 944E SN 0160040124 to Present, Including 0160034634, 0160036710, 0160036722, 0160036735 and 0160036738)**	
10	8036571	1	PRESSURE REDUCING CARTRIDGE, 550 PSI, (37 bar)	
10	8036572	1	SEAL KIT	
11	8036568	1	INVERTED SHUTTLE CARTRIDGE	
11	8036569	1	INVERTED SHUTTLE SEAL KIT	
12	8036570	1	DIRECT ACTING RELIEF CARTRIDGE, 2450 PSI, (168 bar)	
12	N.S.S.	1	DIRECT ACTING RELIEF CARTRIDGE, 2700 PSI, (186 bar) **(644E SN 0160039830 to Present, Including 0160036724, 0160036811, 0160036907 and 0160037012; 944E SN 0160040124 to Present, Including 0160034634, 0160036710, 0160036722, 0160036735 and 0160036738)**	
12	10868086	1	SEAL KIT	
12	7010543	1	SEAL KIT **(644E SN 0160039830 to Present, Including 0160036724, 0160036811, 0160036907 and 0160037012; 944E SN 0160040124 to Present, Including 0160034634, 0160036710, 0160036722, 0160036735 and 0160036738)**	
13	8036566	1	CHARGE LOGIC CARTRIDGE, 1050-1950 PSI, (72-134 bar)	
13	N.S.S.	1	CHARGE LOGIC CARTRIDGE, 1245-2300 PSI, (86-158 bar)	

ITEM	PART NUMBER	QTY	DESCRIPTION	REV
13	8036567	1	SEAL KIT	
13	2900707	1	SEAL KIT **(644E SN 0160039830 to Present, Including 0160036724, 0160036811, 0160036907 and 0160037012; 944E SN 0160040124 to Present, Including 0160034634, 0160036710, 0160036722, 0160036735 and 0160036738)**	
14	10837580	1	LOAD SHUTTLE CARTRIDGE	
14	7010542	1	LOAD SHUTTLE CARTRIDGE **(644E SN 0160039830 to Present, Including 0160036724, 0160036811, 0160036907 and 0160037012; 944E SN 0160040124 to Present, Including 0160034634, 0160036710, 0160036722, 0160036735 and 0160036738)**	
14	8036572	1	SEAL KIT	
14	7010543	1	SEAL KIT **(644E SN 0160039830 to Present, Including 0160036724, 0160036811, 0160036907 and 0160037012; 944E SN 0160040124 to Present, Including 0160034634, 0160036710, 0160036722, 0160036735 and 0160036738)**	
15		Ref	BRAKE PRESSURE SWITCH, (See ELECTRICAL SECTION for Breakdown)	

FIGURE 9-28. STABIL-TRAK CYLINDER VALVES

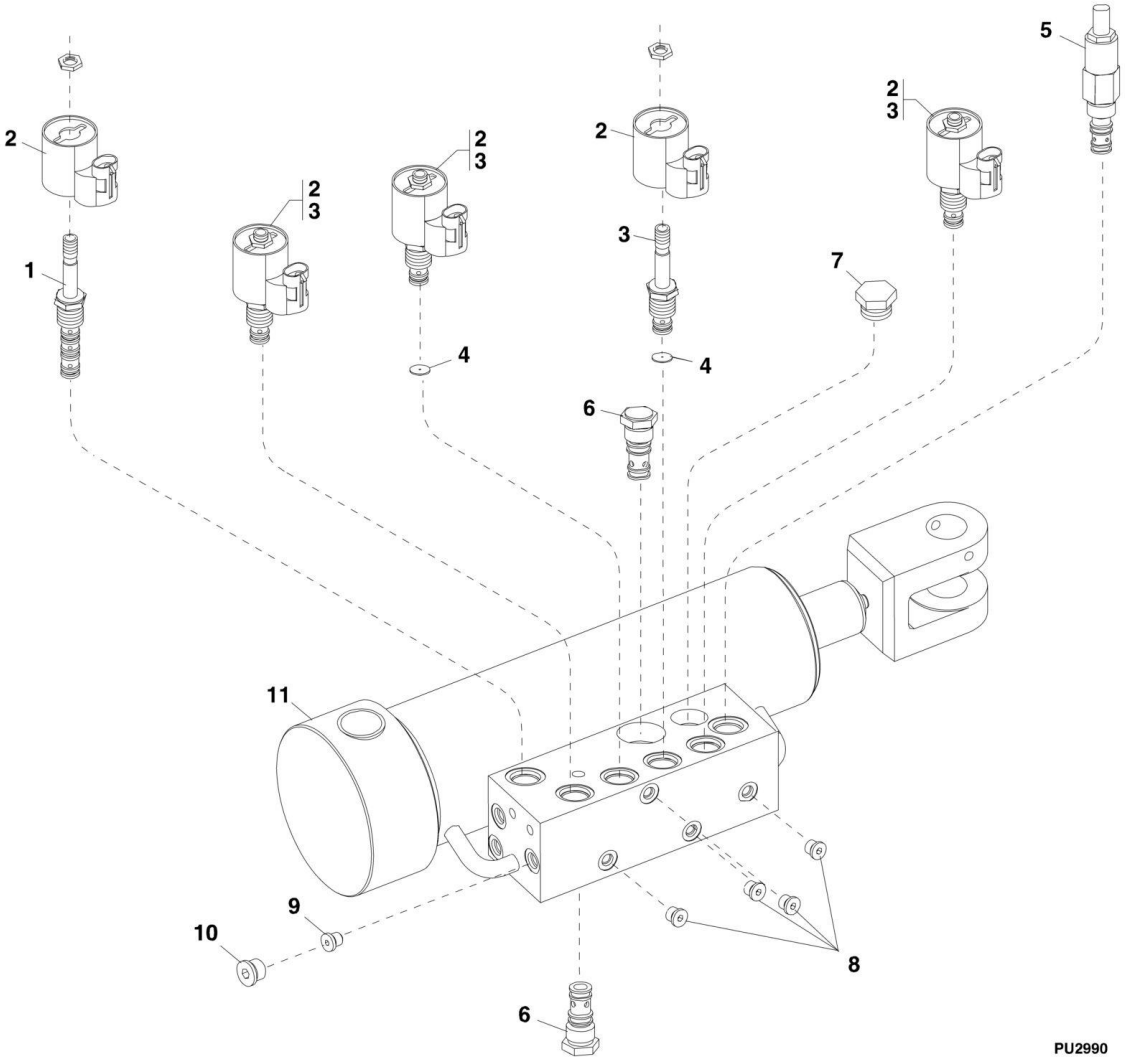

FIGURE 9-28. STABIL-TRAK CYLINDER VALVES

ITEM	PART NUMBER	QTY	DESCRIPTION	REV
	8036831	1	SOLENOID VALVE ASSY - 4 WAY, 12V, (includes items 1 & 2)	
	8036740	1	SEAL KIT	
	8036832	4	SOLENOID VALVE ASSY - 2 WAY, 12V, (includes items 2 & 3)	
	7017496	1	SEAL KIT	
1	8036580	1	SOLENOID VALVE CARTRIDGE, (includes nut)	
2	8036579	5	SOLENOID COIL	
3	8036581	4	SOLENOID VALVE CARTRIDGE, (includes nut)	
4	8035781	2	CONICAL ORIFICE DISK, .060 DIA	
5	8036162	1	PRESSURE REDUCING VALVE, 100 PSI, (7 bar)	
5	8032994	1	SEAL KIT	
6	8035757	2	PO CHECK VALVE - SERIES 10	
6	8036739	1	SEAL KIT	
7	8036582	1	CHECK RELIEF VALVE, 200 PSI, (13 bar)	
7	7017496	1	SEAL KIT	
8	8035785	4	HOLLOW HEX PLUG, #4	
9	8035782	1	ORIFICE PLUG, .030 DIA	
10	8035784	1	HOLLOW HEX PLUG, #6	
11		Ref	STABIL-TRAK CYLINDER, (See STABIL-TRAK CYLINDER for Breakdown)	

FIGURE 9-29. AUXILIARY DUMP VALVE ASSEMBLIES (644E SN 19402 through 20118, SN 0160002519 through 0160003074; 944E SN 19402 through 20123, SN 0160002514 through 0160003072)

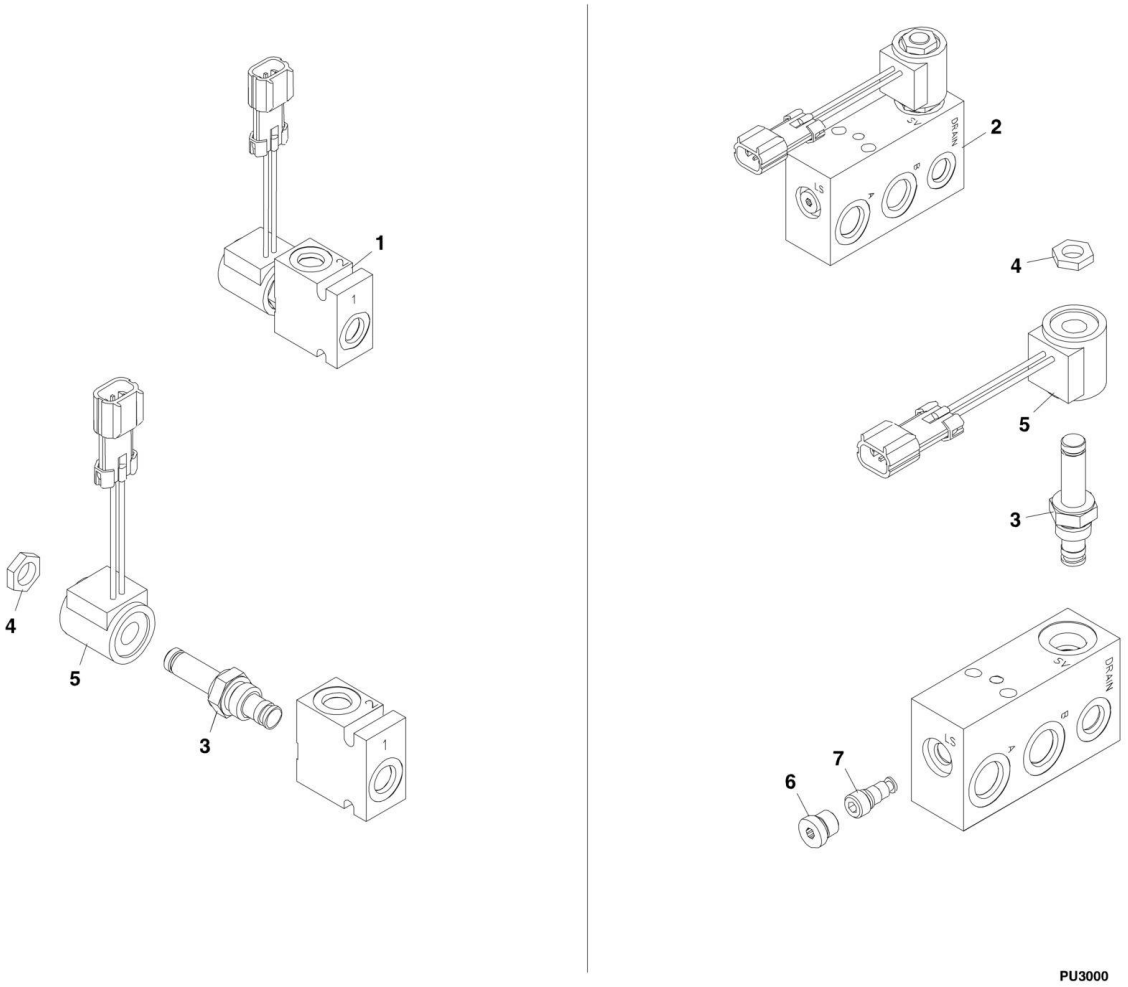

FIGURE 9-29. AUXILIARY DUMP VALVE ASSEMBLIES (644E SN 19402 through 20118, SN 0160002519 through 0160003074; 944E SN 19402 through 20123, SN 0160002514 through 0160003072)

ITEM	PART NUMBER	QTY	DESCRIPTION	REV
1	8902321	1	SOLENOID AUX PRESSURE DUMP VALVE, (includes items 3 thru 5), (644E & 944E) **(SN 17569 through 19041)**	
2	8902322	1	SOLENOID AUX PRESSURE DUMP VALVE, (includes items 3 thru 7) **(644E SN 19042 through 20123, SN 016002514 through 0160003074; 944E SN 19042 through 20123, SN 016002514 through 0160003072)**	
3	10867167	1	SOLENOID CARTRIDGE, 2 WAY, (includes item 4)	
3	8036526	1	SEAL KIT	
4	N.S.S.	1	SPECIAL NUT	
5	8036525	1	SOLENOID w/DIODE COIL	
6	8036527	1	HOLLOW HEX O-RING PLUG	
7	10837247	1	SHUTTLE VALVE	

FIGURE 9-30. VALVE TRAY ASSEMBLY, (DUAL JOYSTICK) (SN 17569 through 19401)

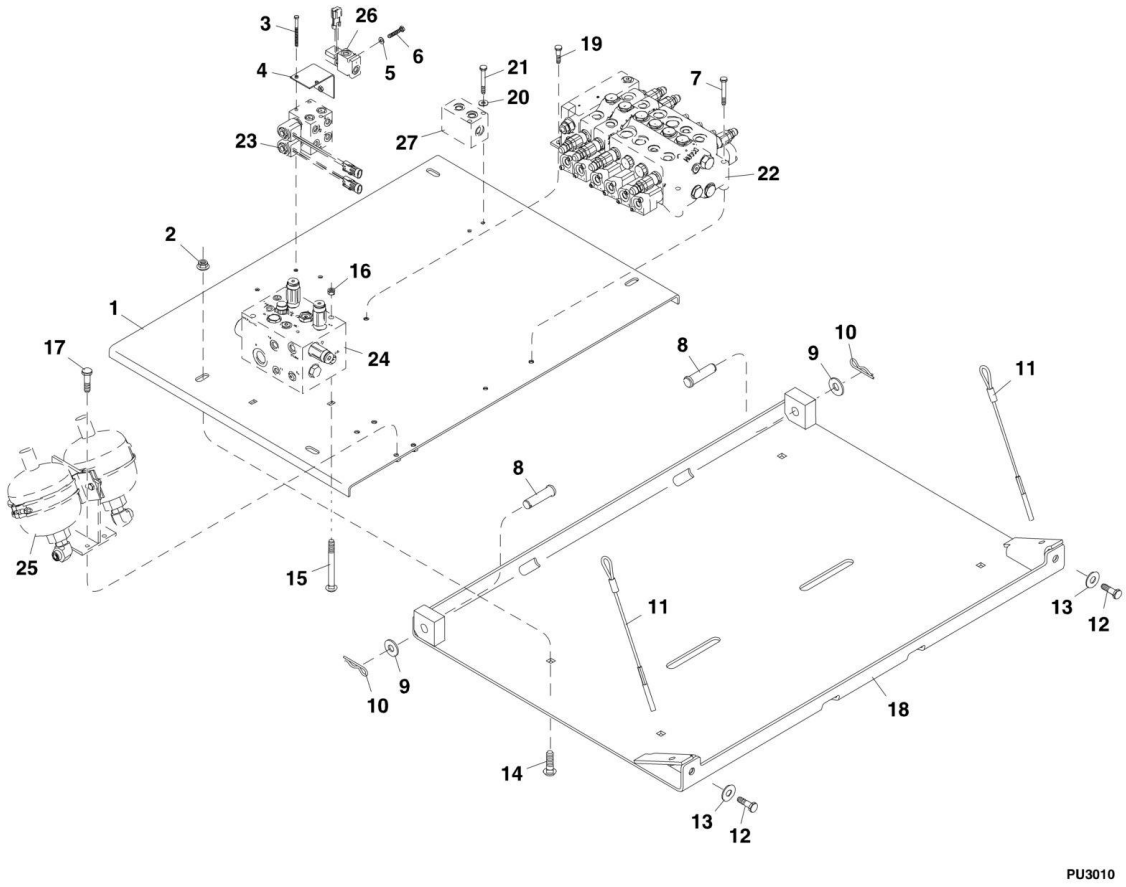

FIGURE 9-30. VALVE TRAY ASSEMBLY, (DUAL JOYSTICK) (SN 17569 through 19401)

ITEM	PART NUMBER	QTY	DESCRIPTION	REV
1	7300490	1	VALVE MOUNTING PLATE	
2	8310194	4	FLANGE NUT, M12-1.75	
3	8310638	2	HEX HD CAPSCREW, M6X90, GR8.8	
4	7301605	1	AUX DUMP VALVE MOUNTING BRACKET	
5	8307219	2	FLAT WASHER, M6	
6	8303541	2	HEX HD CAPSCREW, M6X35, GR8.8	
7	8310030	2	HEX HD CAPSCREW, M8X80, GR8.8	
8	8301453	2	CLEVIS PIN, 3/4	
9	8307104	2	FLAT WASHER, 3/4	
10	8310211	2	COTTER HAIR PIN	
11	7130412	2	TETHER	
12	8303519	2	HEX HD CAPSCREW, M12X35, GR8.8	
13	8310308	2	FLAT HARDENED WASHER, 1/2	
14	8310604	4	CARRIAGE BOLT, M12X50, GR8.8	
15	8310711	2	CARRIAGE BOLT, M8X140, GR8.8	
16	8305043	2	HEX NUT, M8X1.25	
17	8303783	4	HEX HD CAPSCREW, M8X25, GR8.8	
18	7300218	1	VALVE TRAY MOUNTING PLATE	
19	8303606	1	HEX HD CAPSCREW, M8X20, GR8.8	
20	8307219	2	FLAT WASHER, M6	
21	8310714	2	HEX HD CAPSCREW, M6X80, GR8.8	
22		Ref	MAIN CONTROL VALVE, (See MAIN CONTROL VALVE for Breakdown)	
23		Ref	PILOT SELECT VALVE, (See PILOT SELECT VALVE ASSEMBLY, (DUAL JOYSTICK) for Breakdown)	
24		Ref	ACCUMULATOR CHARGE VALVE, (See ACCUMULATOR CHARGE VALVE ASSEMBLY for Breakdown)	
25		Ref	ACCUMULATORS, (See ACCUMULATORS ASSEMBLY for Breakdown)	
26		Ref	AUXILIARY DUMP VALVE, (See AUXILIARY DUMP VALVE ASSEMBLIES for Breakdown)	
27		Ref	MANIFOLD, (See HYDRAULIC CIRCUITS SECTION for Breakdown)	

FIGURE 9-31. VALVE TRAY ASSEMBLY, (DUAL JOYSTICK) (644E SN 18065 through 20123, SN 0160002514 through 0160003074; 944E SN 18065 through 20123, SN 0160002514 through 0160003072)

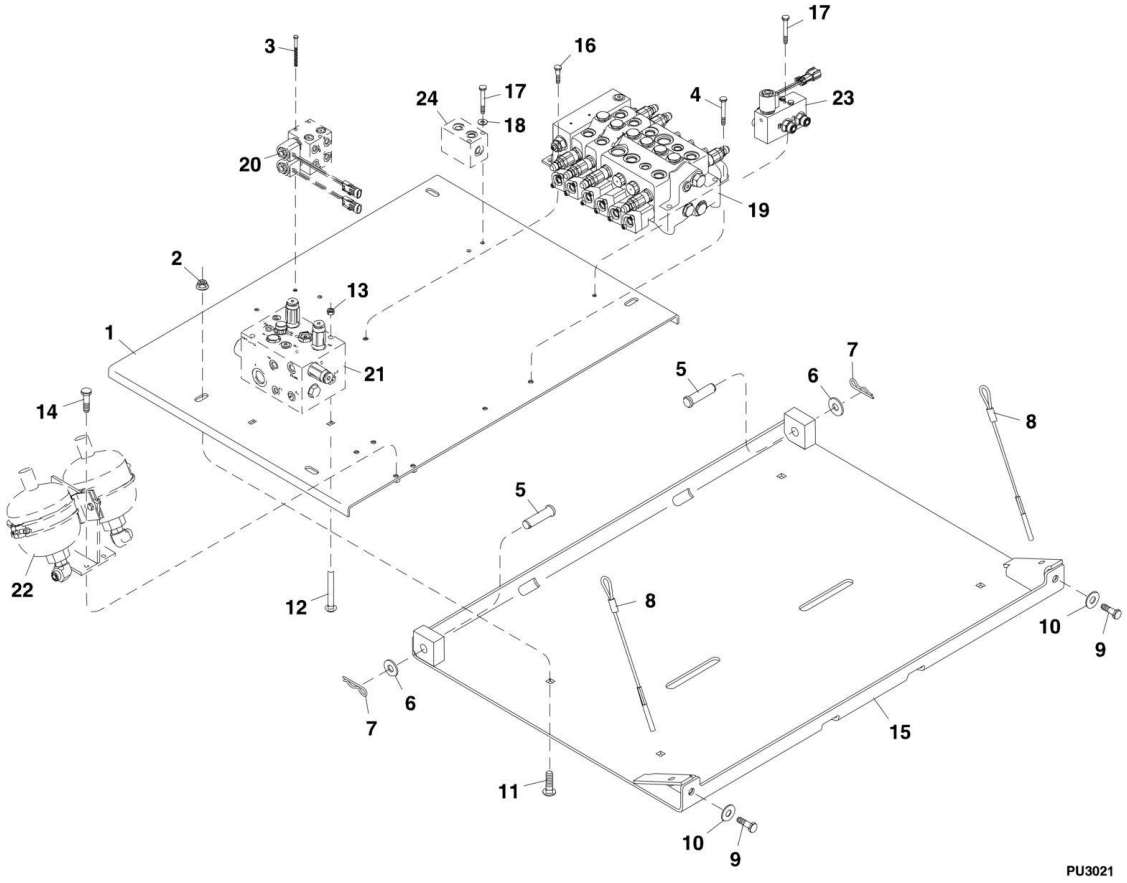

FIGURE 9-31. VALVE TRAY ASSEMBLY, (DUAL JOYSTICK) (644E SN 18065 through 20123, SN 0160002514 through 0160003074; 944E SN 18065 through 20123, SN 0160002514 through 0160003072)

ITEM	PART NUMBER	QTY	DESCRIPTION	REV
1	7300490	1	VALVE MOUNTING PLATE	
2	8310194	4	FLANGE NUT, M12X1.75	
3	8310638	2	HEX HD CAPSCREW, M6X90, GR8.8	
4	8310030	2	HEX HD CAPSCREW, M8X80, GR8.8	
5	8301453	2	CLEVIS PIN, 3/4	
6	8307104	2	FLAT WASHER, 3/4	
7	8310211	2	COTTER HAIR PIN	
8	7130412	2	TETHER	
9	8303519	2	HEX HD CAPSCREW, M12X35, GR8.8	
10	8310308	2	FLAT HARDENED WASHER, 1/2	
11	8310604	4	CARRIAGE BOLT, M12X50, GR8.8	
12	8310711	2	CARRIAGE BOLT, M8X140, GR8.8	
13	8305043	2	HEX NUT, M8-1.25	
14	8303783	4	HEX HD CAPSCREW, M8X25, GR8.8	
15	7300218	1	VALVE TRAY MOUNTING PLATE	
16	8303606	1	HEX HD CAPSCREW, M8X20, GR8.8	
17	8310714	4	HEX HD CAPSCREW, M6X80, GR8.8	
18	8307219	2	FLAT WASHER, M6	
19		Ref	MAIN CONTROL VALVE, (See MAIN CONTROL VALVE for Breakdown)	
20		Ref	PILOT SELECT VALVE, (See PILOT SELECT VALVE ASSEMBLY, (DUAL JOYSTICK) for Breakdown)	
21		Ref	ACCUMULATOR CHARGE VALVE, (See ACCUMULATOR CHARGE VALVE ASSEMBLY for Breakdown)	
22		Ref	ACCUMULATORS, (See ACCUMULATORS ASSEMBLY for Breakdown)	
23		Ref	AUXILIARY DUMP VALVE, (See AUXILIARY DUMP VALVE ASSEMBLIES for Breakdown)	
24		Ref	MANIFOLD, (See HYDRAULIC CIRCUITS SECTION for Breakdown)	

FIGURE 9-32. VALVE TRAY ASSEMBLY, (DUAL JOYSTICK) (644E SN 0160003088 to Present; 944E SN 0160003086 to Present)

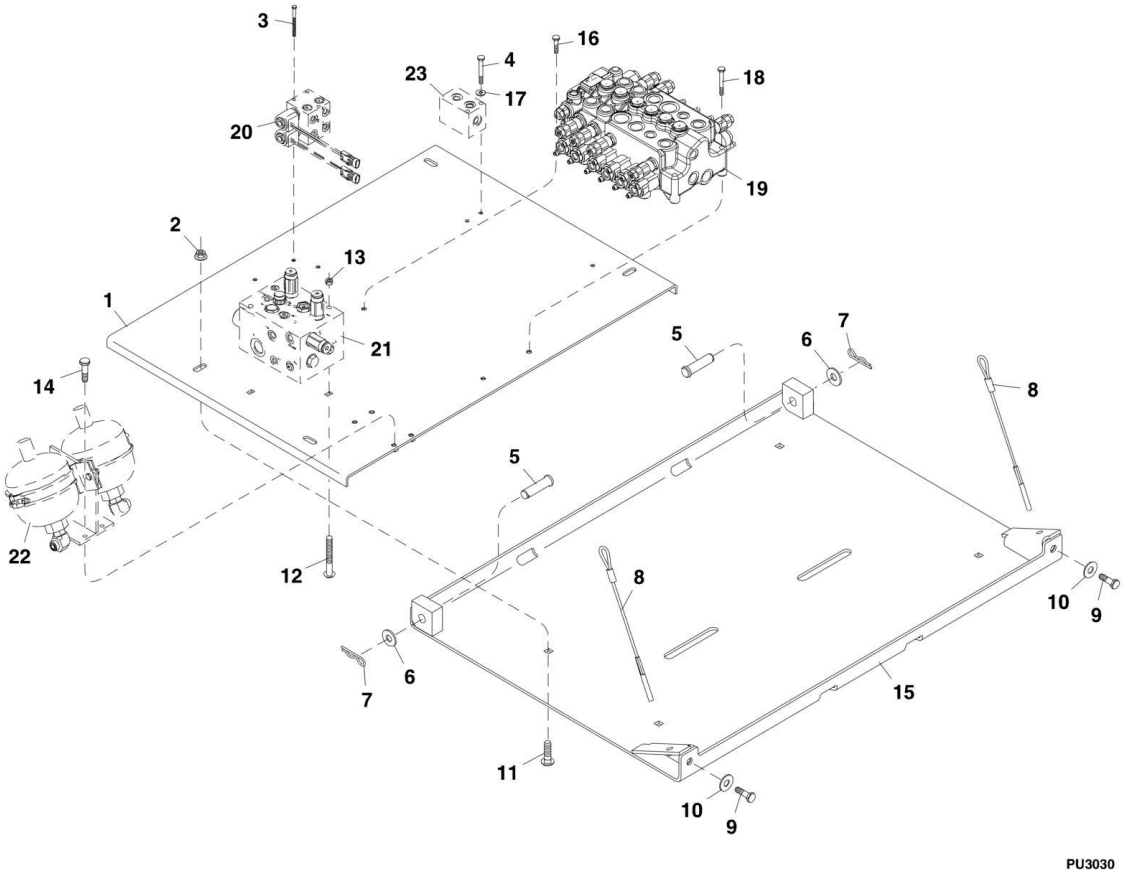

FIGURE 9-32. VALVE TRAY ASSEMBLY, (DUAL JOYSTICK) (644E SN 0160003088 to Present; 944E SN 0160003086 to Present)

ITEM	PART NUMBER	QTY	DESCRIPTION	REV
1	7300490	1	VALVE MOUNTING PLATE	
2	8310194	4	FLANGE NUT, M12X1.75	
3	8310638	2	HEX HD CAPSCREW, M6X90, GR8.8	
4	8310714	2	HEX HD CAPSCREW, M6X80, GR8.8	
5	8301453	2	CLEVIS PIN, 3/4	
6	8307104	2	FLAT WASHER, 3/4	
7	8310211	2	COTTER HAIR PIN	
8	7130412	2	TETHER	
9	8303519	2	HEX HD CAPSCREW, M12X35, GR8.8	
10	8310308	2	FLAT HARDENED WASHER, 1/2	
11	8310604	4	CARRIAGE BOLT, M12X50, GR8.8	
12	8310711	2	CARRIAGE BOLT, M8X140, GR8.8	
13	8305043	2	HEX NUT, M8X1.25	
14	8303783	4	HEX HD CAPSCREW, M8X25, GR8.8	
15	7300218	1	VALVE TRAY MOUNTING PLATE	
16	8303611	1	HEX HD CAPSCREW, M8X30, GR8.8	
17	8307219	4	FLAT WASHER, M6	
18	8310030	2	HEX HD CAPSCREW, M8X80, GR8.8	
19		Ref	MAIN CONTROL VALVE, (See MAIN CONTROL VALVE for Breakdown)	
20		Ref	PILOT SELECT VALVE, (See PILOT SELECT VALVE ASSEMBLY, (DUAL JOYSTICK) for Breakdown)	
21		Ref	ACCUMULATOR CHARGE VALVE, (See ACCUMULATOR CHARGE VALVE ASSEMBLY for Breakdown)	
22		Ref	ACCUMULATORS, (See ACCUMULATORS ASSEMBLY for Breakdown)	
23		Ref	MANIFOLD, (See HYDRAULIC CIRCUITS SECTION for Breakdown)	

FIGURE 9-33. VALVE TRAY ASSEMBLY, (SINGLE JOYSTICK) (644E SN 18065 through 20123, SN 0160002514 through 0160003074; 944E SN 18065 through 20123, SN 0160002514 through 0160003072)

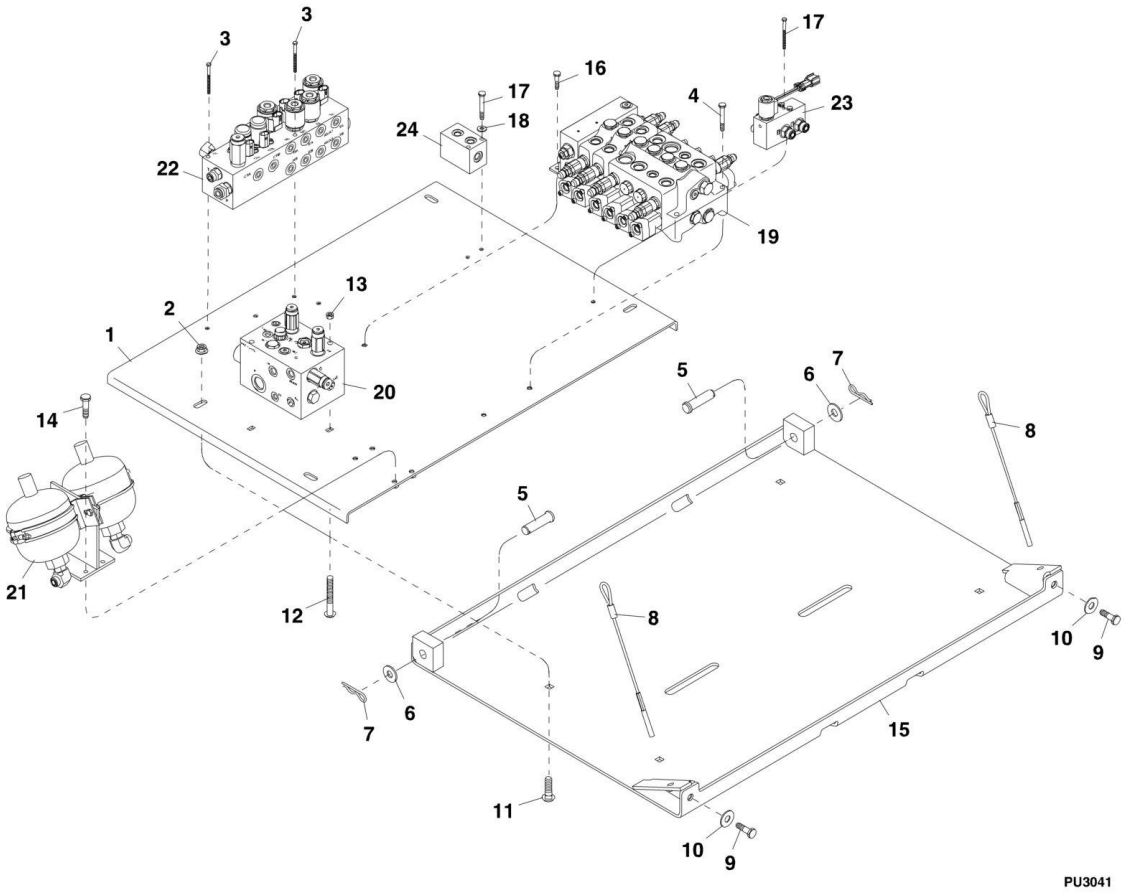

FIGURE 9-33. VALVE TRAY ASSEMBLY, (SINGLE JOYSTICK) (644E SN 18065 through 20123, SN 0160002514 through 0160003074; 944E SN 18065 through 20123, SN 0160002514 through 0160003072)

ITEM	PART NUMBER	QTY	DESCRIPTION	REV
1	7300490	1	VALVE MOUNTING PLATE	
2	8310194	4	FLANGE NUT, M12X1.75	
3	8310638	2	HEX HD CAPSCREW, M6-1.0X90mm, PC8.8	
4	8310030	4	HEX HD CAPSCREW, M8-1.25X80mm, PC8.8	
5	8301453	2	CLEVIS PIN, 3/4	
6	8307104	2	FLAT WASHER, 3/4	
7	8310211	2	COTTER HAIR PIN	
8	7130412	2	TETHER	
9	8303519	2	HEX HD CAPSCREW, M12-1.75X35mm, PC8.8	
10	8310308	2	FLAT HARDENED WASHER, 1/2	
11	8310604	4	CARRIAGE BOLT, M12-1.75X50mm, PC8.8	
12	8310711	2	CARRIAGE BOLT, M8-1.25X140mm, PC8.8	
13	8305043	2	HEX NUT, M8-13.25	
14	8303783	4	HEX HD CAPSCREW, M8-1.25X25mm, PC8.8	
15	7300218	1	VALVE TRAY MOUNTING PLATE	
16	8303606	1	HEX HD CAPSCREW, M8-1.25X20mm, PC8.8	
17	8310714	2	HEX HD CAPSCREW, M6-1.0X80mm, PC8.8	
18	8307219	2	FLAT WASHER, M6	
19		Ref	MAIN CONTROL VALVE, (See MAIN CONTROL VALVE for Breakdown)	
20		Ref	ACCUMULATOR CHARGE VALVE, (See ACCUMULATOR CHARGE VALVE ASSEMBLY for Breakdown)	
21		Ref	ACCUMULATORS, (See ACCUMULATORS ASSEMBLY for Breakdown)	
22		Ref	PILOT SELECT VALVE, (See PILOT SELECT VALVE ASSEMBLY, (DUAL JOYSTICK) for Breakdown)	
23		Ref	AUXILIARY DUMP VALVE, (See AUXILIARY DUMP VALVE ASSEMBLIES for Breakdown)	
24		Ref	MANIFOLD, (See HYDRAULIC CIRCUITS SECTION for Breakdown)	

FIGURE 9-34. VALVE TRAY ASSEMBLY, (SINGLE JOYSTICK) (644E SN 0160003088 to Present; 944E SN 0160003086 to Present)

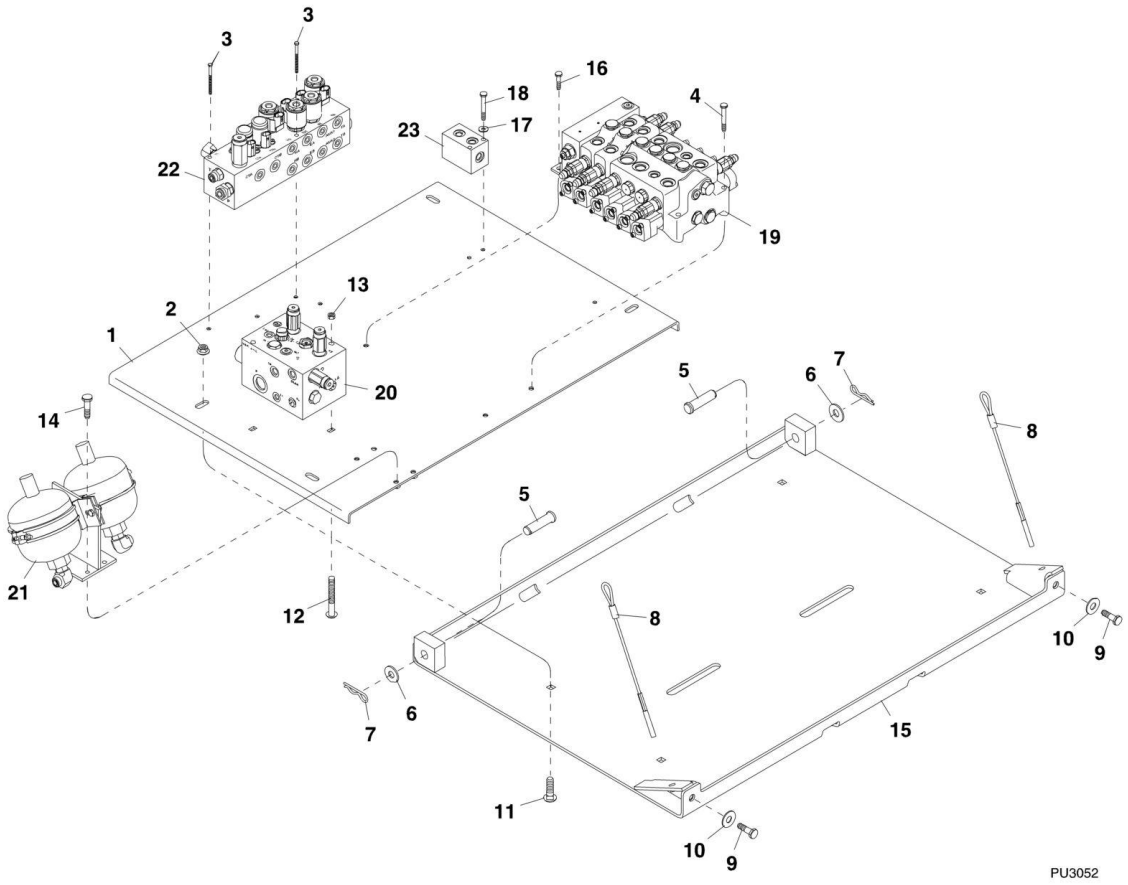

FIGURE 9-34. VALVE TRAY ASSEMBLY, (SINGLE JOYSTICK) (644E SN 0160003088 to Present; 944E SN 0160003086 to Present)

ITEM	PART NUMBER	QTY	DESCRIPTION	REV
1	7300490	1	VALVE MOUNTING PLATE	
2	8310194	4	FLANGE NUT, M12X1.75	
3	8310638	2	HEX HD CAPSCREW M6-1.0X90mm, PC8.8	
4	8310030	4	HEX HD CAPSCREW, M8-1.25X80mm, PC8.8	
5	8301453	2	CLEVIS PIN, 3/4	
6	8307104	2	FLAT WASHER, 3/4	
7	8310211	2	COTTER HAIR PIN	
8	7130412	2	TETHER	
9	8303519	2	HEX HD CAPSCREW, M12-1.75X35mm, PC8.8	
10	8310308	2	FLAT HARDENED WASHER, 1/2	
11	8310604	4	CARRIAGE BOLT, M12-1.75X50mm, PC8.8	
12	8310711	2	CARRIAGE BOLT, M8-1.25X140mm, PC8.8	
13	8305043	2	HEX NUT, M8-1.25	
14	8303783	4	HEX HD CAPSCREW, M8-1.25X25mm, PC8.8	
15	7301093	1	VALVE TRAY MOUNTING PLATE	
16	8303606	1	HEX HD CAPSCREW, M8-1.25X20mm, PC8.8	
17	8307219	2	FLAT WASHER, M6	
18	8310714	2	HEX HD CAPSCREW, M6-1.0X80mm, PC8.8	
19		Ref	MAIN CONTROL VALVE, (See MAIN CONTROL VALVE for Breakdown)	
20		Ref	ACCUMULATOR CHARGE VALVE, (See ACCUMULATOR CHARGE VALVE ASSEMBLY for Breakdown)	
21		Ref	ACCUMULATORS, (See ACCUMULATORS ASSEMBLY for Breakdown)	
22		Ref	PILOT SELECT VALVE, (See PILOT SELECT VALVE ASSEMBLY, (DUAL JOYSTICK) for Breakdown)	
23		Ref	MANIFOLD, (See HYDRAULIC CIRCUITS SECTION for Breakdown)	

FIGURE 9-35. HYDRAULIC TANK ASSEMBLY (644E Prior to SN 0160048717, Excluding 0160045421; 944E SN 0160041827 to Present)

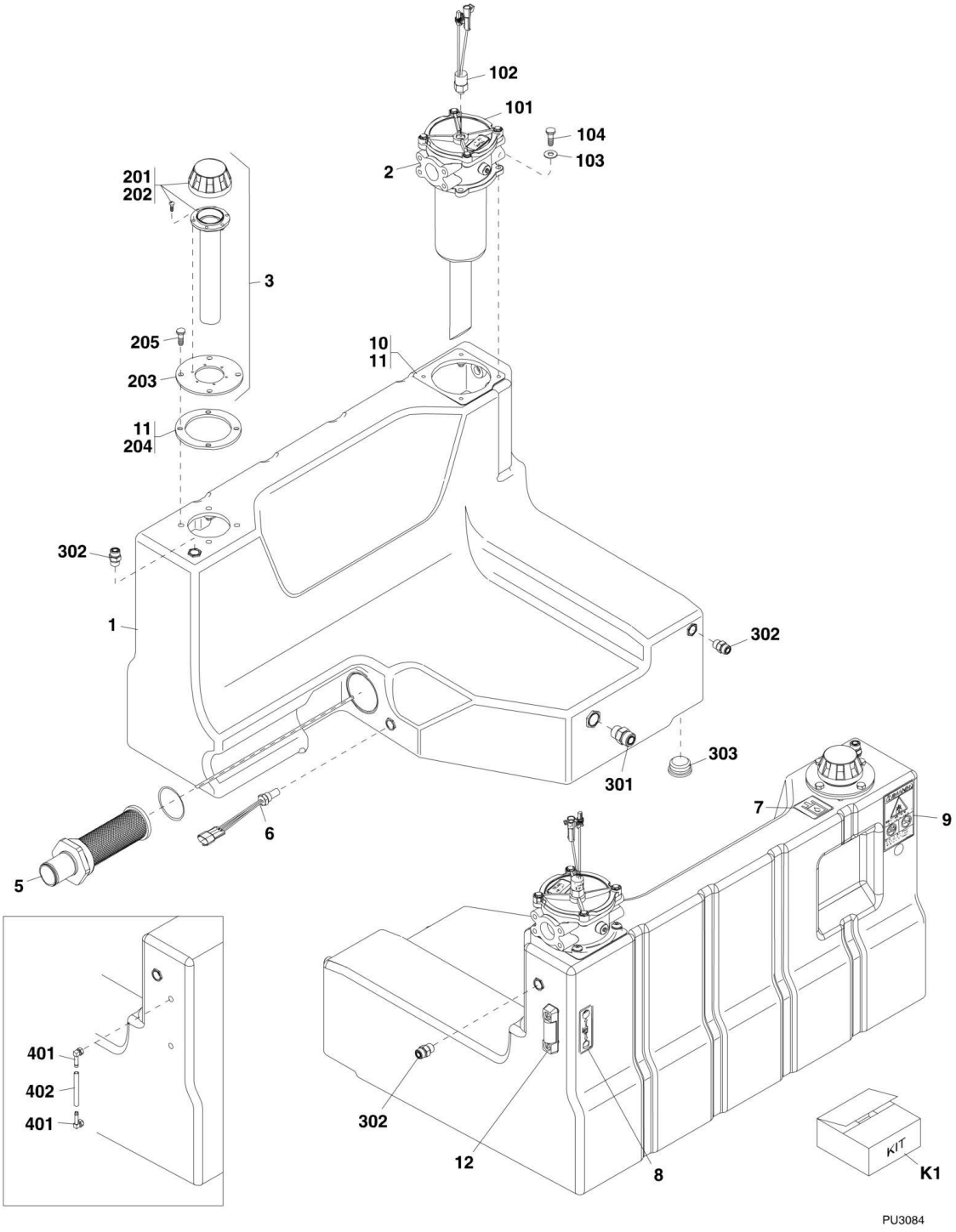

FIGURE 9-35. HYDRAULIC TANK ASSEMBLY (644E Prior to SN 0160048717, Excluding 0160045421; 944E SN 0160041827 to Present)

ITEM	PART NUMBER	QTY	DESCRIPTION	REV
	7300226	1	RESERVOIR ASSY, (includes items 1 thru 9, 11 & 12)	H
1	7300229	NLA	HYDRAULIC TANK ASSY, (no longer available, use 1001092281 for replacement) **(644E SN 17569 through 20123, SN 0160002514 through 0160029565; 944E SN 17569 through 20123, SN 0160002514 through 0160029564)**	
1	1001091304	1	HYDRAULIC TANK ASSY **(644E SN 0160029567 through 0160043356; 944E SN 0160029566 through 0160041823)**	
2	7300537	1	RETURN FILTER ASSY, (includes items 101 thru 104)	C
3	7300538	1	FILLER CAP WITH STRAINER ASSY, (includes items 201 thru 205)	B
4	7300539	1	HYDRAULIC RESERVOIR FITTING KIT, (includes items 1 & 301 thru 303)	C
5	7138740	1	SUCTION STRAINER, (torque to 65-85 lb-ft/88-115 Nm)	
5	7029716	1	O-RING	
6	8223240	1	DUAL TEMPERATURE SWITCH, (torque to 25-40 lb-ft/34-54 Nm)	
7	4100181	1	HYDRAULIC OIL FILL DECAL **(644E SN 17569 through 20123; 644E SN 0160002514 through 0160025030; 944E SN 17569 through 20123, SN 0160002514 through 0160025029)**	
7	1707079	1	HYDRAULIC OIL FILL DECAL **(644E SN 0160025031 through 0160043356; 944E SN 0160025032 through 0160041823)**	
8	4108302	1	HYDRAULIC OIL LEVEL DECAL **(644E SN 17569 through 20123, SN 0160002514 through 0160025030; 944E SN 17569 through 20123, SN 0160002514 through 0160025029)**	
8	1707114	1	HYDRAULIC OIL LEVEL DECAL **(644E SN 0160025031 through 0160043356; 944E SN 0160025032 through 0160041823)**	
9	1707077	1	BATTERY EXPLOSION, WARNING DECAL	
10	8320055	1	GASKET	
11	0100087	AR	GASKET SEALANT ADHESIVE	
12	91563136	1	FLUID LEVEL GAUGE **(644E SN 0160015631 through 0160043356; 944E SN 0160015628 through 0160041823)**	
101	8320053	1	HEAD AND ELEMENT FILTER ASSY	
101	8320054	1	HYDRAULIC OIL FILTER, (not shown)	
101	7028932	1	SEAL KIT	
101	8320055	1	GASKET	
102	8223526	1	HYDRAULIC OIL FILTER PRESSURE SWITCH, (torque to 25-40 lb-ft/34-54 Nm)	
103	8307221	4	PLAIN WASHER, M10	
104	8310668	4	BUTTON HD CAPSCREW, M10X25, GR10.9, (torque to 40-50 lb-in)	
201	7300487	1	FILL NECK ASSY, (includes 202 & 203)	B
202	7300479	1	FILLER CAP, NO BREATHER ASSY	
203	0080268	1	FILL NECK ADAPTER	
204	7138209	1	HYDRAULIC TANK GASKET	
205	8303798	4	HEX HD CAPSCREW, M10x25, GR8.8, (torque to 40-50 lb-in)	
301		Ref	CONNECTOR, (See HYDRAULIC CIRCUITS SECTION for Breakdown)	
302		Ref	CONNECTOR, (See HYDRAULIC CIRCUITS SECTION for Breakdown)	
303	8770223	1	SOCKET PLUG, HD #16, (torque to 25-40 lb-ft/34-54 Nm)	
401	8430034	2	ELBOW, 90, O-RING BEADED #6-6 **(644E SN 17569 through 20123, SN 0160002514 through 0160015606; 944E SN 17569 through 20123, SN 0160002514 through 0160015601)**	
402	8036627	1	SIGHT GAUGE TUBING **(644E SN 17569 through 20123, SN 0160002514 through 0160015606; 944E SN 17569 through**	

ITEM	PART NUMBER	QTY	DESCRIPTION	REV
			20123, SN 0160002514 through 0160015601)	
K1	1001092281		HYDRAULIC TANK ASSEMBLY KIT, (includes items 1 & 12)	

FIGURE 9-36. HYDRAULIC TANK ASSEMBLY (644E SN 0160048717 to Present, Including 0160045421; 944E SN 0160041827 to Present)

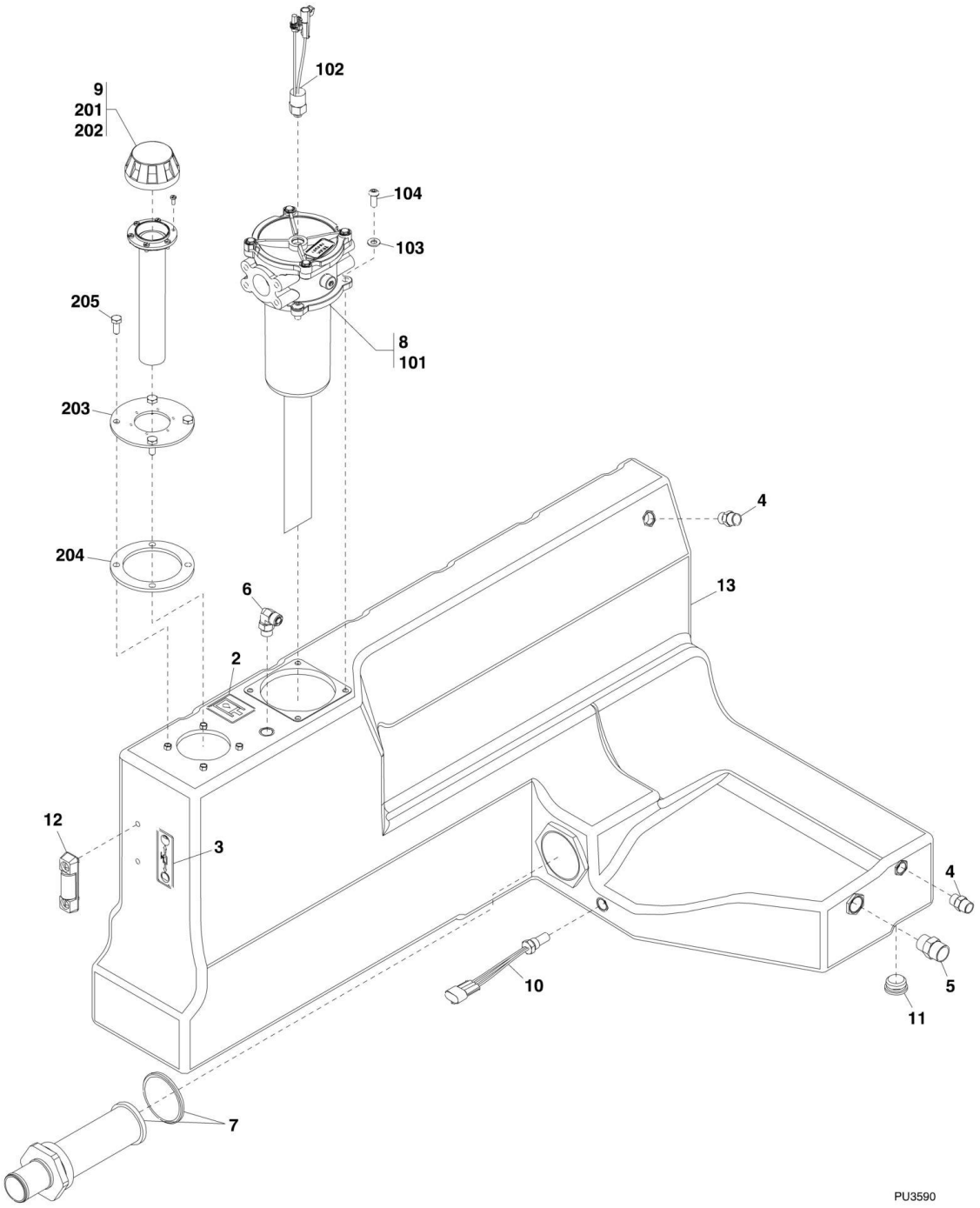

FIGURE 9-36. HYDRAULIC TANK ASSEMBLY (644E SN 0160048717 to Present, Including 0160045421; 944E SN 0160041827 to Present)

ITEM	PART NUMBER	QTY	DESCRIPTION	REV
	1001112366	1	HYDRAULIC TANK ASSEMBLY, (includes items 1 thru 13)	B
1	0100087	AR	GASKET SEALANT ADHESIVE, (not shown)	
2		Ref	HYDRAULIC OIL DECAL, (See DECALS SECTION for Breakdown)	
3		Ref	HYDRAULIC OIL LEVEL DECAL, (See DECALS SECTION for Breakdown)	
4	2110808	2	STRAIGHT FITTING, (includes o-ring), (torque to 25-40 lb-ft/34-54 Nm)	
5	2111212	1	STRAIGHT FITTING, (includes o-ring), (torque to 25-40 lb-ft/34-54 Nm)	
6	2130808	1	ADAPTER, 90, (includes o-ring), (torque to 25-40 lb-ft/34-54 Nm)	
7	7138740	1	SUCTION STRAINER, (torque to 65-85 lb-ft)	
7	7029716	1	O-RING	
8	7300537	1	RETURN FILTER ASSY, (includes items 101 thru 104)	C
9	7300538	1	FILLER CAP WITH STRAINER ASSY, (includes items 201 thru 205)	B
10	8223240	1	DUAL TEMPERATURE SWITCH, (torque to 25-40 lb-ft/34-54 Nm)	
11	8770223	1	PLUG	
12	91563136	1	FLUID LEVEL GAUGE	
13	1001112367	1	HYDRAULIC TANK	
101	8320053	1	HEAD AND ELEMENT FILTER ASSY	
101	8320054	1	HYDRAULIC OIL FILTER, (not shown)	
101	7028932	1	SEAL KIT	
101	8320055	1	GASKET	
102	8223526	1	HYDRAULIC OIL FILTER PRESSURE SWITCH, (torque to 25-40 lb-ft/34-54 Nm)	
103	8307221	4	PLAIN WASHER, M10	
104	8310668	4	BUTTON HD CAPSCREW, M10X25, GR10.9	
201	7300487	1	FILL NECK ASSY, (includes 202, 203 and neck screw)	B
202	7300479	1	FILLER CAP, NO BREATHER ASSEMBLY	
203	0080268	1	FILL NECK ADAPTER	
204	7138209	1	HYDRAULIC TANK GASKET	
205	8303798	4	HEX HD CAPSCREW, M10X25, GR8.8	

FIGURE 9-37. ACCUMULATORS ASSEMBLY

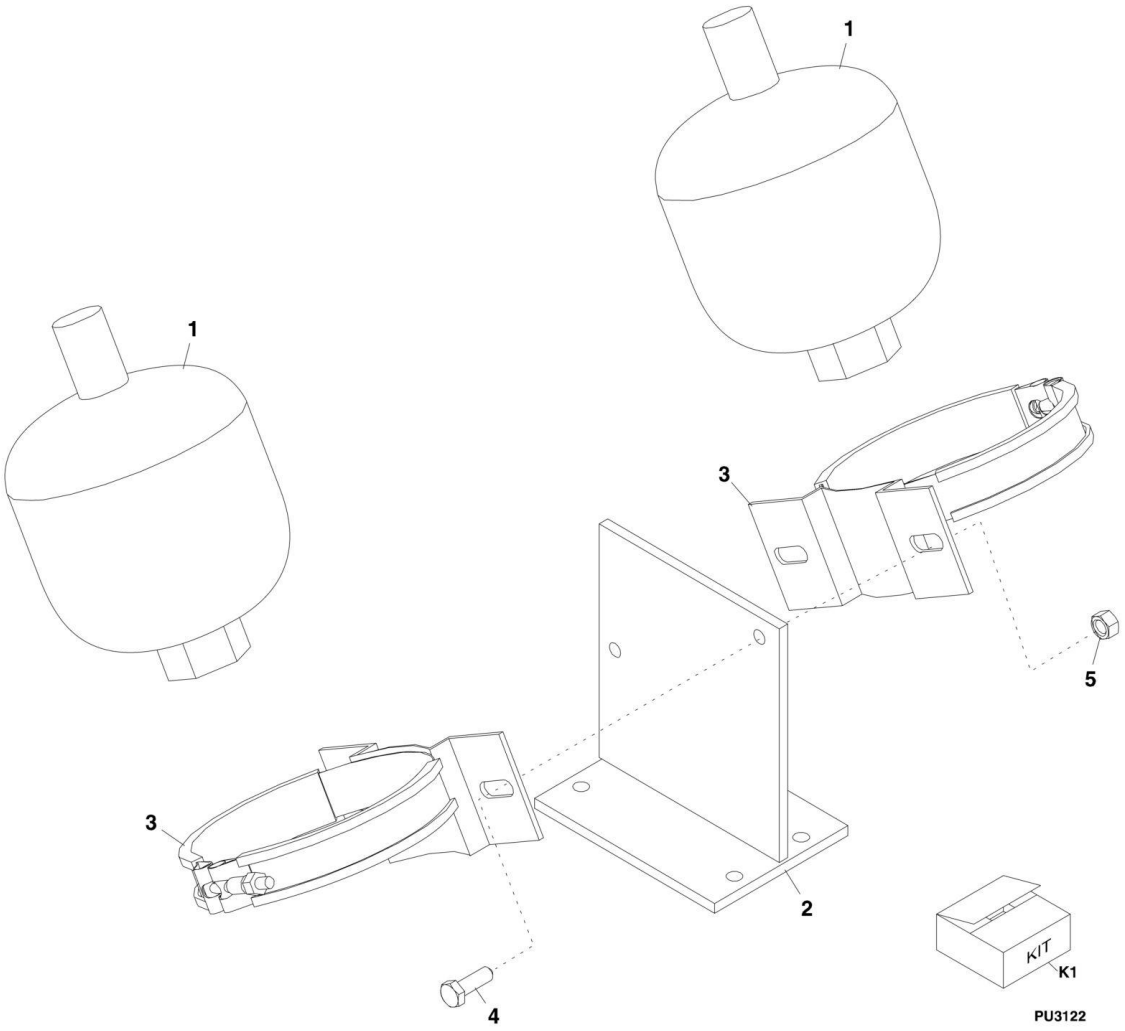

FIGURE 9-37. ACCUMULATORS ASSEMBLY

ITEM	PART NUMBER	QTY	DESCRIPTION	REV
1	8742009	2	HYDRAULIC ACCUMULATOR, 1 LITER DIAPHRAGM **(644E Prior to SN 0160039830, Excluding 0160036724, 0160036811, 0160036907 and 0160037012; 944E Prior to SN 0160040124, Excluding 0160034634, 0160036710, 0160036722, 0160036735 and 0160036738)**	
1	1001103492	2	HYDRAULIC ACCUMULATOR, 1 LITER DIAPHRAGM **(644E SN 0160039830 to Present, Including 0160036724, 0160036811, 0160036907 and 0160037012; 944E SN 0160040124 to Present, Including 0160034634, 0160036710, 0160036722, 0160036735 and 0160036738)**	
2	7300987	1	ACCUMULATOR MOUNTING BRACKET	
3	7301013	2	ACCUMULATOR MOUNT CLAMP	
4	8303783	2	HEX HD CAPSCREW, M8X25, GR8.8	
5	8305043	2	HEX NUT, M8X1.25	
K1	10268992	1	ACCUMULATOR CHARGE KIT	

FIGURE 9-38. DIAGNOSTIC PRESSURE TAPS

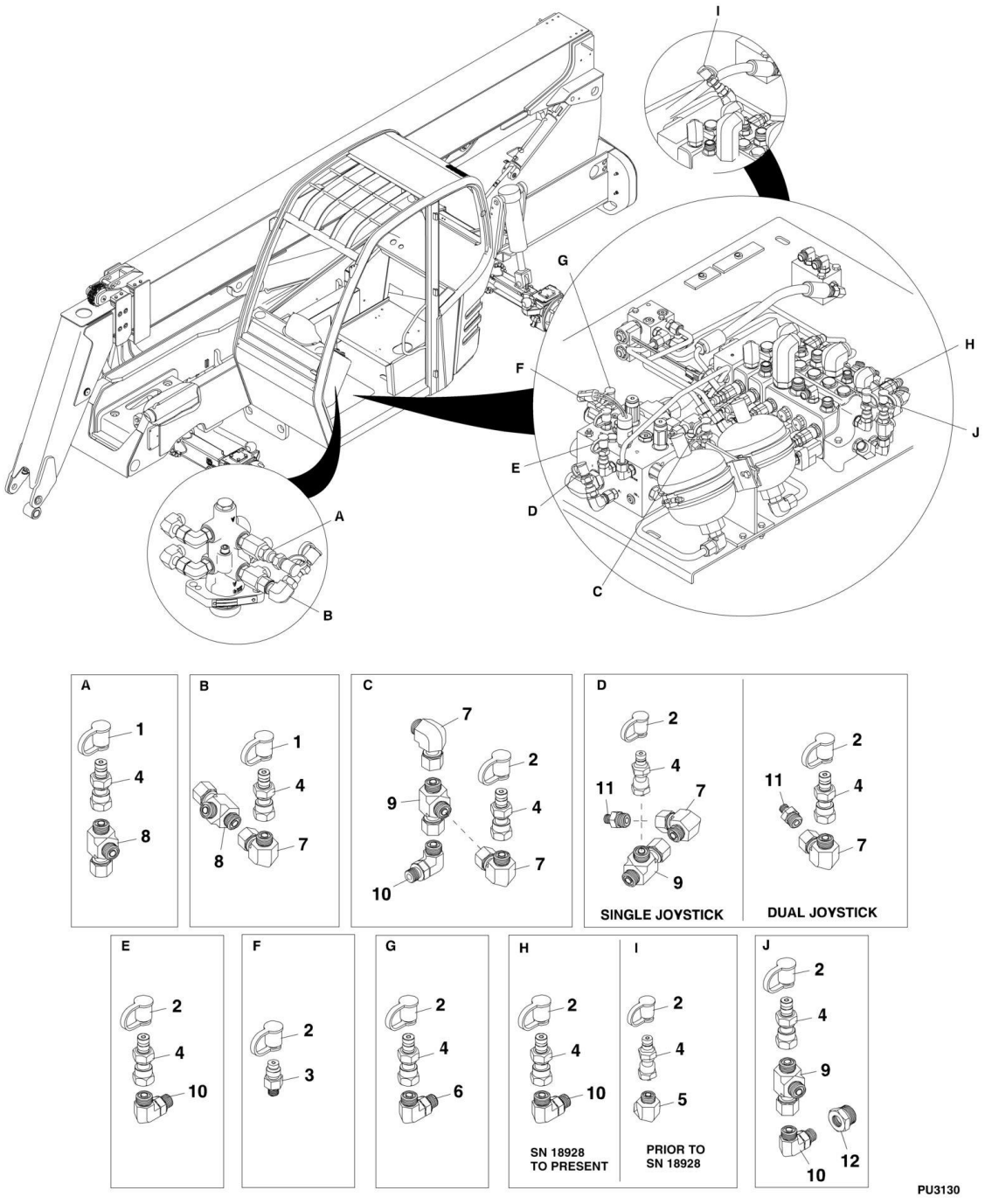

FIGURE 9-38. DIAGNOSTIC PRESSURE TAPS

ITEM	PART NUMBER	QTY	DESCRIPTION	REV
1	8430032	2	BLACK DUST CAP	
2	8430098	7	YELLOW DUST CAP	
3	8430033	1	DIAGNOSTIC ADAPTER, 1/8 BODY, .438-20 MALE OR	
4	8430081	8	DIAGNOSTIC ADAPTER, 1/8 BODY	
5	8770140	1	ELBOW, 45	
6	2130604	1	ELBOW, 90	
7	2172106	4	ELBOW, 90, (swivel nut)	
8	2170306	2	SWIVEL RUN TEE	
9	2170706	3	SWIVEL RUN TEE	
10	2130606	3	ELBOW, 90	
11	2110604	1	CONNECTOR	
12	2220218	1	REDUCER/EXPANDER, #10-6	

FIGURE 9-39. SIDE TILT CARRIAGE CYLINDER

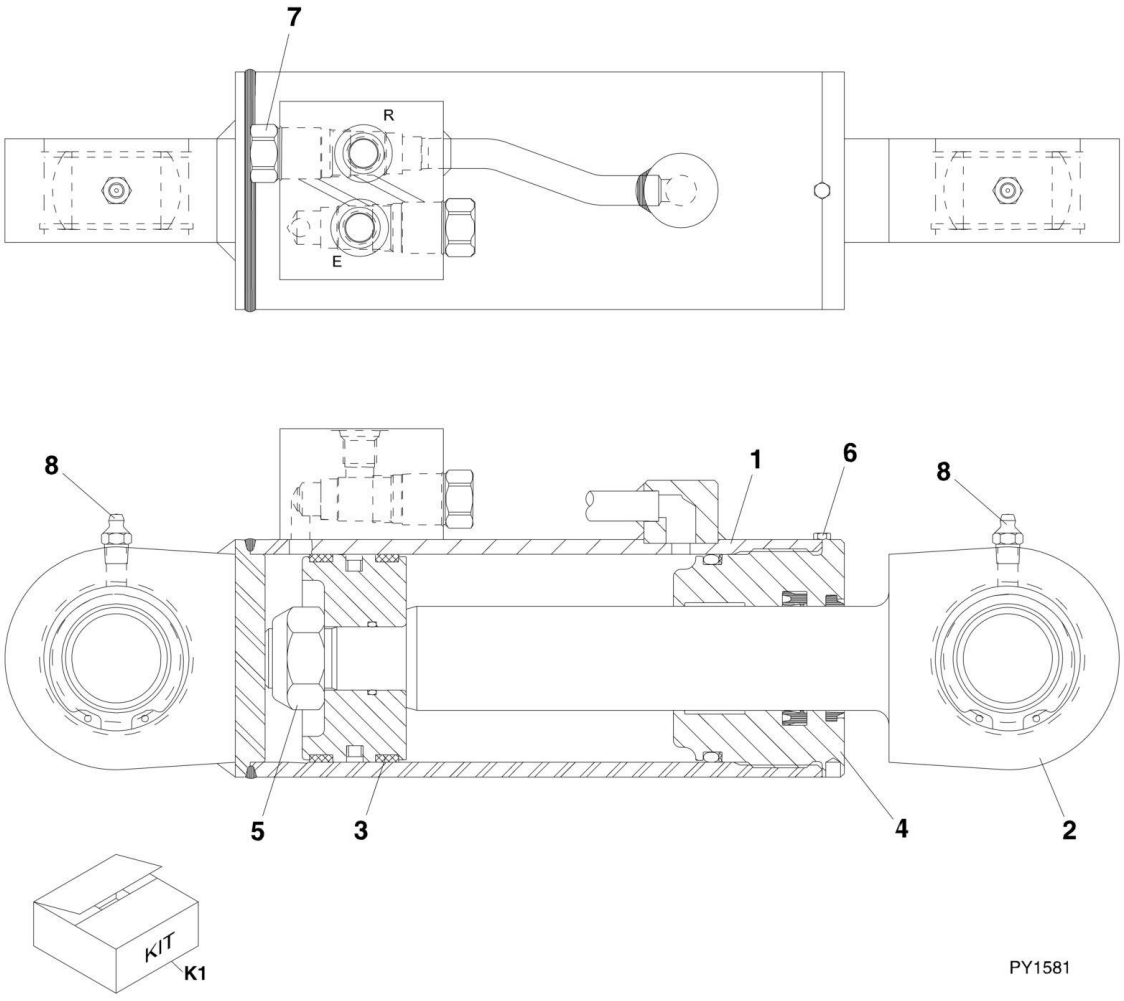

FIGURE 9-39. SIDE TILT CARRIAGE CYLINDER

ITEM	PART NUMBER	QTY	DESCRIPTION	REV
	1001090134	1	SIDE TILT CARRIAGE CYLINDER, (includes all items)	B
1	70022038	1	BARREL ASSY	
2	70022039	1	ROD ASSY	
3	70022040	1	PISTON	
3	70022042	1	SEAL KIT	
4	70021908	1	ROD BEARING	
4	70022043	1	SEAL KIT	
5	90022230	1	HEX NUT	
6	7029760	1	CAPSCREW	
7	4640438	2	CHECK VALVE	
7	2900770	1	SEAL KIT	
8	91044080	2	GREASE FITTING	
K1	70022041		SEAL KIT, (contains 70022042 & 70022043)	

FIGURE 9-40. 72IN 90 SWING CARRIAGE CYLINDER

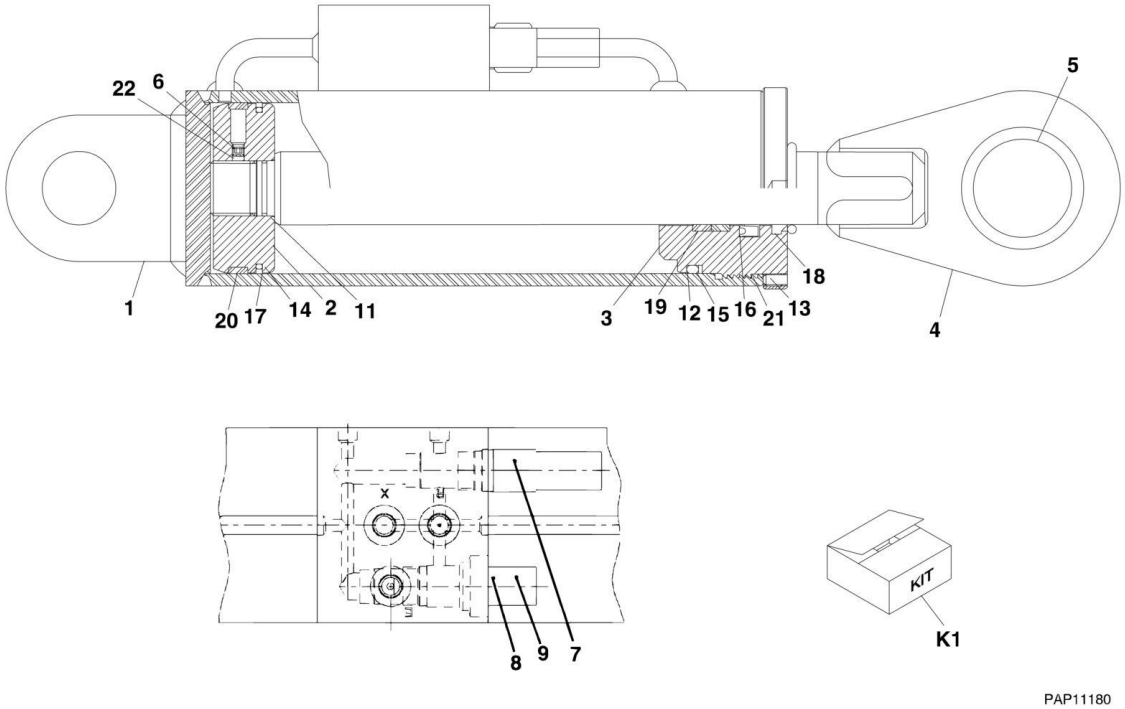

FIGURE 9-40. 72IN 90 SWING CARRIAGE CYLINDER

ITEM	PART NUMBER	QTY	DESCRIPTION	REV
	1001103182	1	SWING CARRIAGE CYLINDER, (includes items 1 thru 22)	B
1	70022044	1	TUBE ASSY	
2	8035863	1	PISTON	
3	8035862	1	HEAD GLAND	
4	70022045	1	ROD ASSY	
5	70022046	1	BEARING	
6	8035536	2	SET SCREW, 5/16-18X1/2	
7	70020428	1	RELIEF VALVE, (preset to 2000 psi)	
7	7024574	1	SEAL KIT	
8	8033786	1	COUNTER BALANCE VALVE, (preset to 3000 psi)	
8	8205655	1	SEAL KIT	
9	70021812	1	TAMPERPROOF CAP	
11	Kit K1	1	O-RING	
12	Kit K1	1	O-RING	
13	Kit K1	1	O-RING	
14	Kit K1	1	SQUARE RING	
15	Kit K1	1	BACKUP RING	
16	Kit K1	1	SEAL	
17	Kit K1	1	PISTON SEAL	
18	Kit K1	1	ROD WIPER	
19	Kit K1	2	WEARBAND	
20	Kit K1	1	WEARBAND	
21	Kit K1	2	INSERT	
22	Kit K1	2	INSERT	
K1	2915023	1	SEAL KIT, (includes items 11 thru 22)	

FIGURE 9-41. GRAPPLE BUCKET CYLINDER

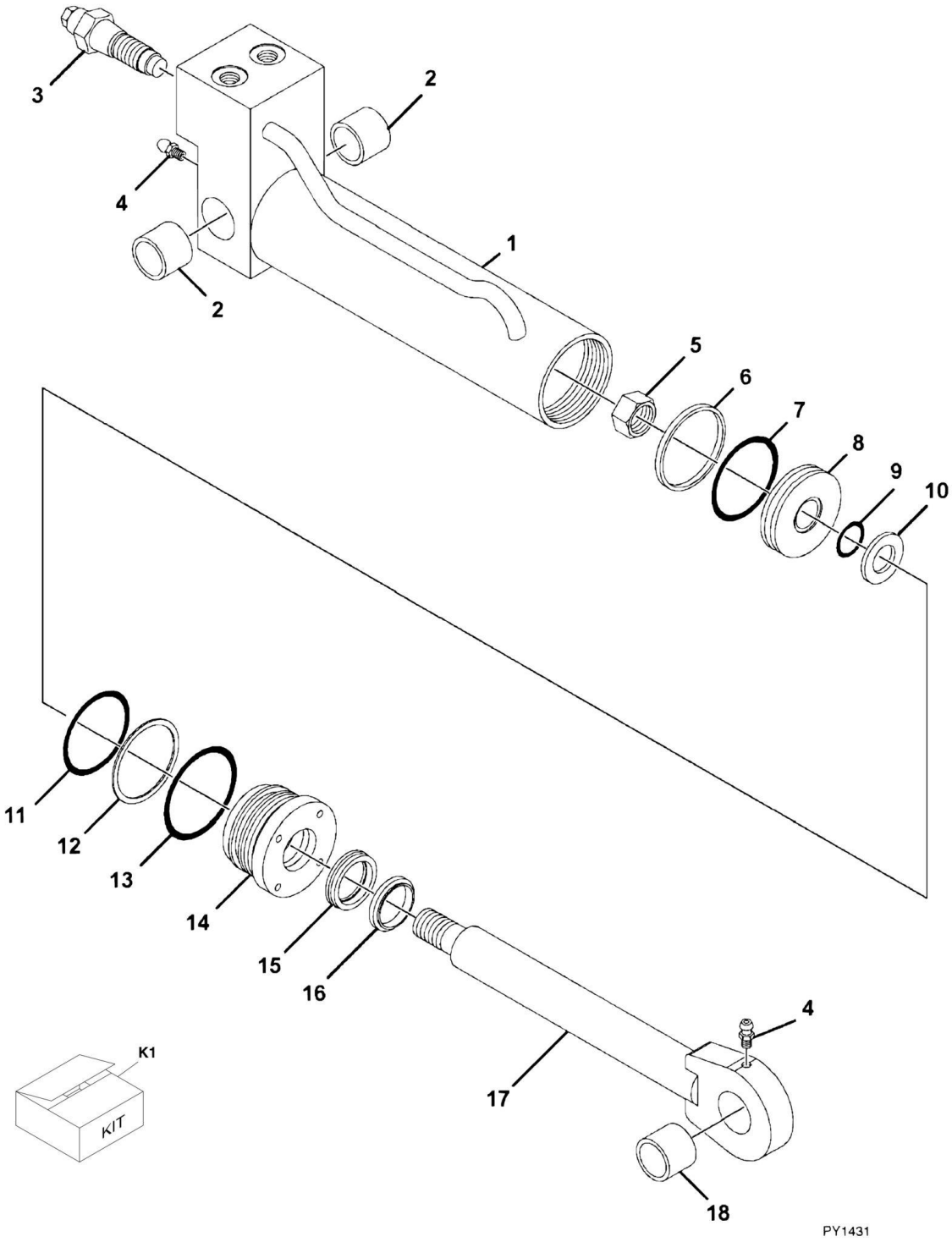

FIGURE 9-41. GRAPPLE BUCKET CYLINDER

ITEM	PART NUMBER	QTY	DESCRIPTION	REV
	70021393	1	GRAPPLE BUCKET CYLINDER, (includes all items)	
1	70021465	1	CYLINDER TUBE	
2	70021448	2	BUSHING	
3	70021464	2	VALVE CARTRIDGE	
4	90554045	2	GREASE FITTING	
5	70021440	1	HEX NUT	
6	Kit K1	1	PISTON RING	
7	Kit K1	1	O-RING	
8	70021451	1	PISTON	
9	Kit K1	1	O-RING	
10	70021444	1	WASHER	
11	Kit K1	1	O-RING	
12	Kit K1	1	BACK-UP WASHER	
13	Kit K1	1	O-RING	
14	70021446	1	CYLINDER GLAND	
15	Kit K1	1	POLY-PAK SEAL	
16	Kit K1	1	ROD WIPER	
17	70021466	1	PISTON ROD	
18	70021447	1	BUSHING	
K1	70021452	1	SEAL KIT (includes items 6, 7, 9, 11 thru 13, 15 & 16)	

FIGURE 9-42. 50 IN SIDE SHIFT CARRIAGE CYLINDER (644E SN 0160034164 to Present; 944E SN 0160034158 to Present)

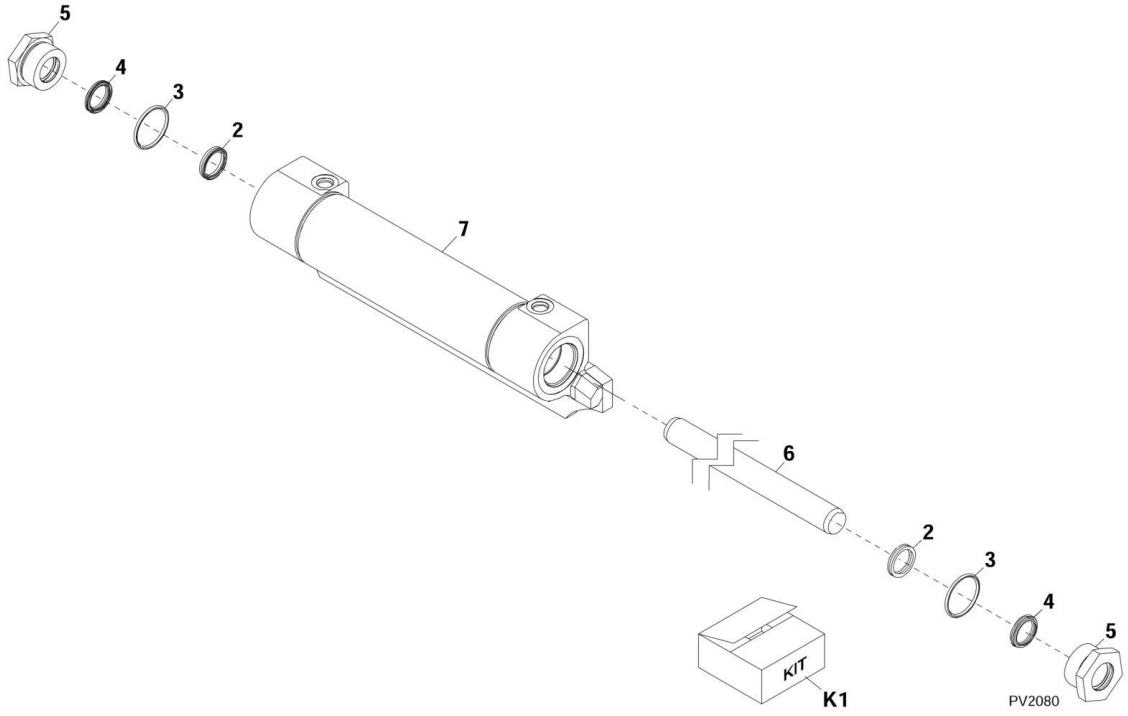

FIGURE 9-42. 50 IN SIDE SHIFT CARRIAGE CYLINDER (644E SN 0160034164 to Present; 944E SN 0160034158 to Present)

ITEM	PART NUMBER	QTY	DESCRIPTION	REV
	70024539	1	50 IN SIDE SHIFT CARRIAGE CYLINDER, (includes all items)	B
2	Kit K1	2	ROD SEAL	
3	70024547	2	O-RING	
4	Kit K1	2	ROD WIPER SEAL	
5	70024548	2	RETAINER SEAL	
6	N.S.S.	1	ROD	
7	N.S.S.	1	BARREL	
K1	70024549	1	SEAL KIT, (includes items 2 & 4)	

SECTION 10 - ELECTRICAL

FIGURE 10-1. BATTERY AND VEHICLE GROUND CABLES (Prior to SN 01600487817, Excluding 0160045421)

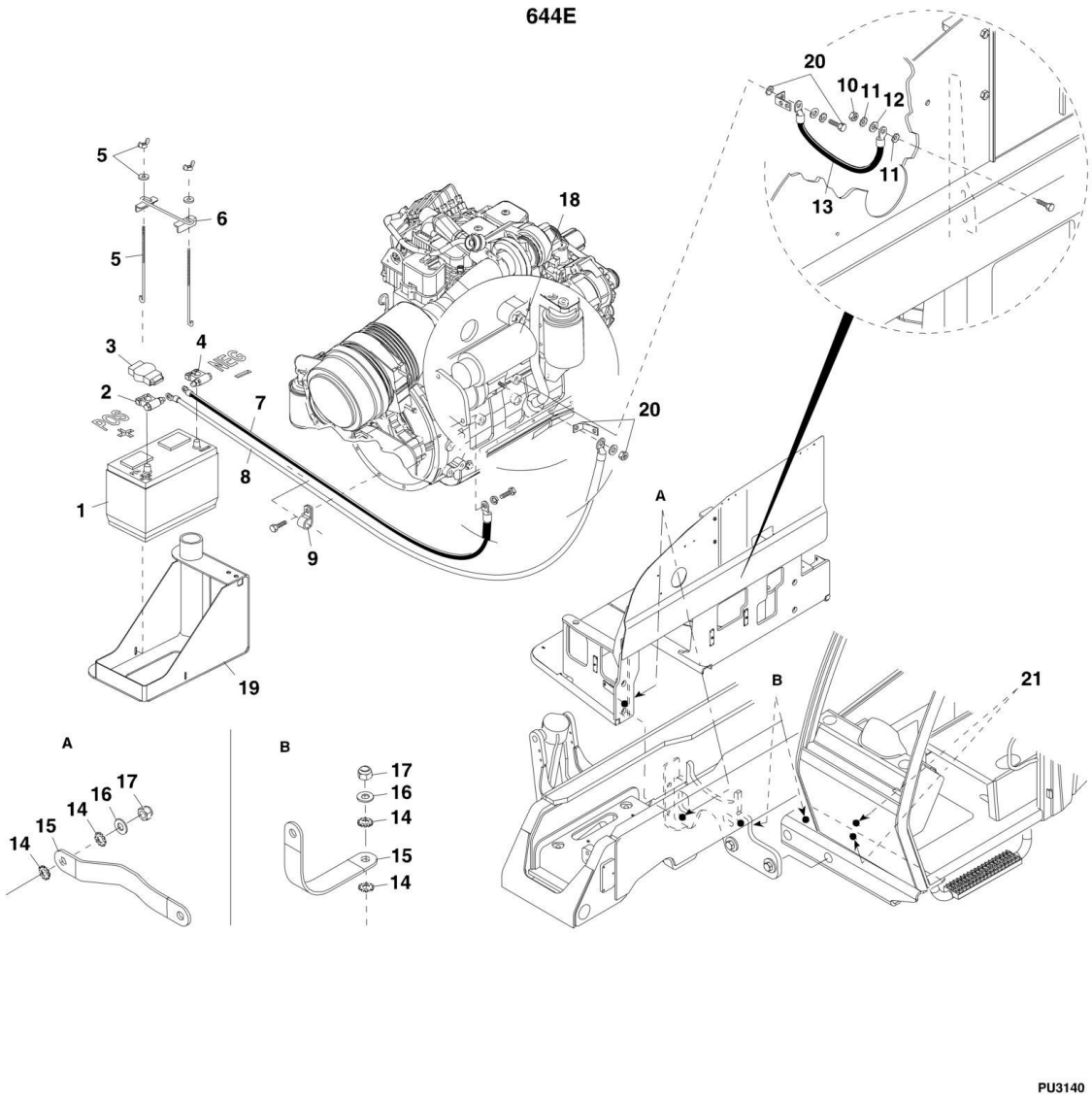

FIGURE 10-1. BATTERY AND VEHICLE GROUND CABLES (Prior to SN 01600487817, Excluding 0160045421)

ITEM	PART NUMBER	QTY	DESCRIPTION	REV
1	8270144	1	12V BATTERY	
2	8270148	1	POSITIVE POLARITY BATTERY CLAMP	
3	7301893	1	BATTERY TERMINAL INSULATOR	
4	8270147	1	NEGATIVE POLARITY BATTERY CLAMP	
5	8270146	2	BATTERY HOLD DOWN BOLT ASSEMBLY	
6	8270145	1	BATTERY HOLD DOWN BRACKET ASSEMBLY	
7	7300342	1	NEGATIVE BATTERY CABLE	
8	7300341	1	POSITIVE BATTERY CABLE	
9	8406201	1	TUBE CLIP, 1-1/2	
10	8305038	1	HEX LOCKNUT, M10X1.5	
11	8310046	2	LOCKWASHER, 10mm, (external tooth)	
12	8307221	1	PLAIN WASHER, 10mm	
13	7300343	1	FRAME GROUNDING CABLE	
14	8310647	4	LOCKWASHER, 8mm, (external tooth)	
15	6611172	2	GROUND STRAP	
16	8307222	2	WASHER, 8mm	
17	8305654	2	HEX LOCKNUT, M8X1.25	
18		Ref	STARTER, (See ENGINE AND ATTACHING PARTS SECTION for Breakdown)	
19		Ref	LOWER BATTERY SUPPORT, (See FRAME AND ATTACHING PARTS SECTION for Breakdown)	
20		Ref	GROUNDING HARDWARE, (See POWER COMPONENTS for breakdown)	
21		Ref	GROUND CABLE, (See OPEN CAB ELECTRICAL COMPONENTS for Breakdown)	

FIGURE 10-2. BATTERY AND VEHICLE GROUND CABLES (Prior to SN 0160041827)

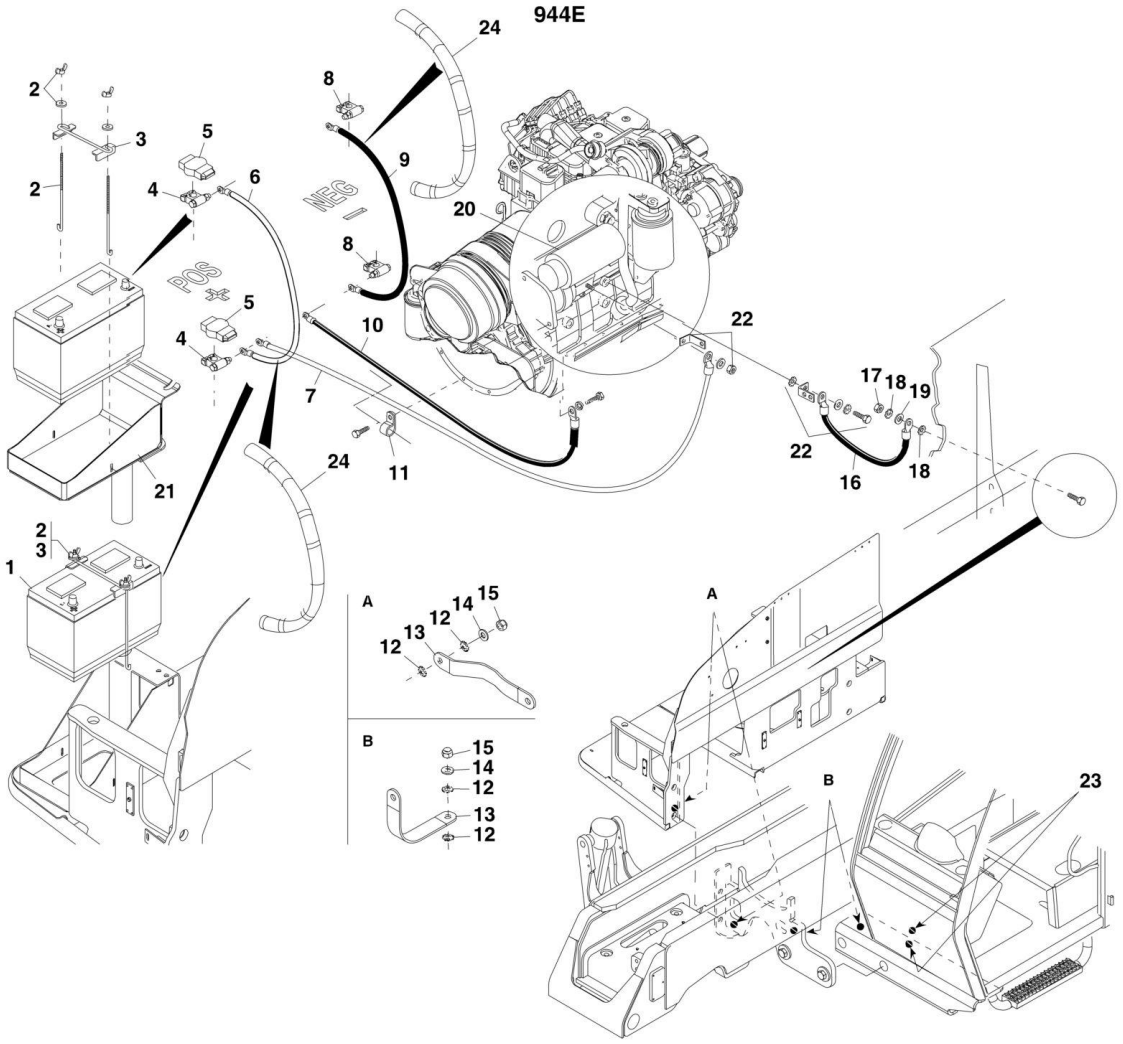

FIGURE 10-2. BATTERY AND VEHICLE GROUND CABLES (Prior to SN 0160041827)

ITEM	PART NUMBER	QTY	DESCRIPTION	REV
1	8270144	2	12V BATTERY	
2	8270146	4	BATTERY HOLD DOWN BOLT ASSEMBLY	
3	8270145	2	BATTERY HOLD DOWN BRACKET ASSEMBLY	
4	8270148	2	POSITIVE POLARITY BATTERY CLAMP	
5	7301893	2	BATTERY TERMINAL INSULATOR	
6	4923214	1	POSITIVE BATTERY CABLE, (dual)	
7	7300341	1	POSITIVE BATTERY CABLE	
8	8270147	2	NEGATIVE POLARITY BATTERY CLAMP	
9	4923215	1	NEGATIVE BATTERY CABLE, (dual)	
10	7300342	1	NEGATIVE BATTERY CABLE	
11	8406201	1	TUBE CLIP, 1-1/2	
12	8310647	4	LOCKWASHER, 8mm, (external tooth)	
13	6611172	2	GROUND STRAP	
14	8307222	2	WASHER, 8mm	
15	8305654	2	HEX LOCKNUT, M8X1.25	
16	7300343	1	FRAME GROUNDING CABLE	
17	8305038	1	HEX LOCKNUT, M10X1.5	
18	8310046	2	LOCKWASHER, 10mm, (external tooth)	
19	8307221	1	WASHER, 10mm	
20		Ref	STARTER, (See ENGINE AND ATTACHING PARTS SECTION for Breakdown)	
21		Ref	LOWER BATTERY SUPPORT, (See FRAME AND ATTACHING PARTS SECTION for Breakdown)	
22		Ref	GROUNDING HARDWARE, (See POWER COMPONENTS for Breakdown)	
23		Ref	GROUND CABLE, (See OPEN CAB ELECTRICAL COMPONENTS for Breakdown)	
24	1560020	2	SPLIT CORRUGATED CONDUIT	

FIGURE 10-3. BATTERY AND VEHICLE GROUND CABLES (644E SN 0160048717 to Present, Including 0160045421; 944E SN 0160041827 to Present)

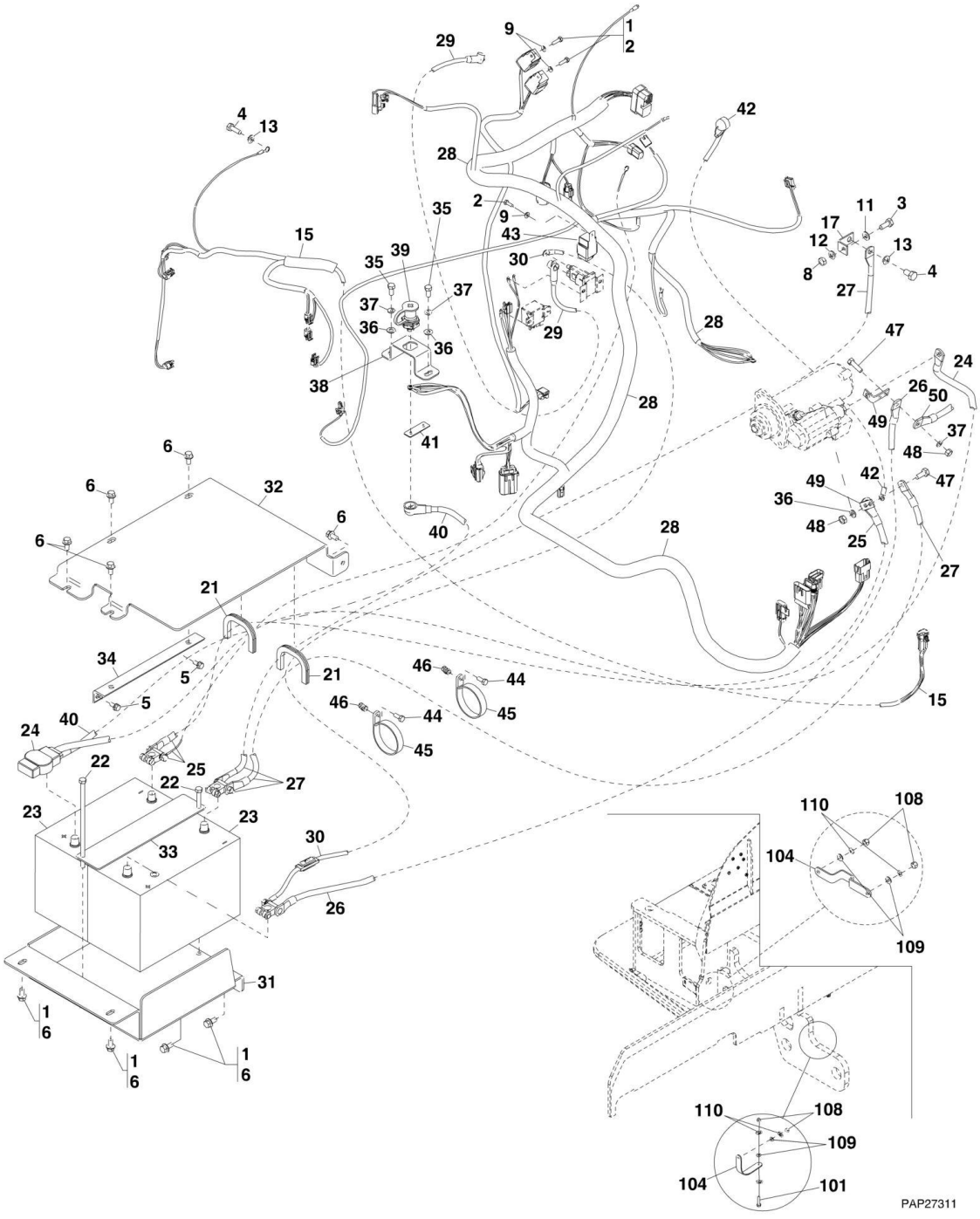

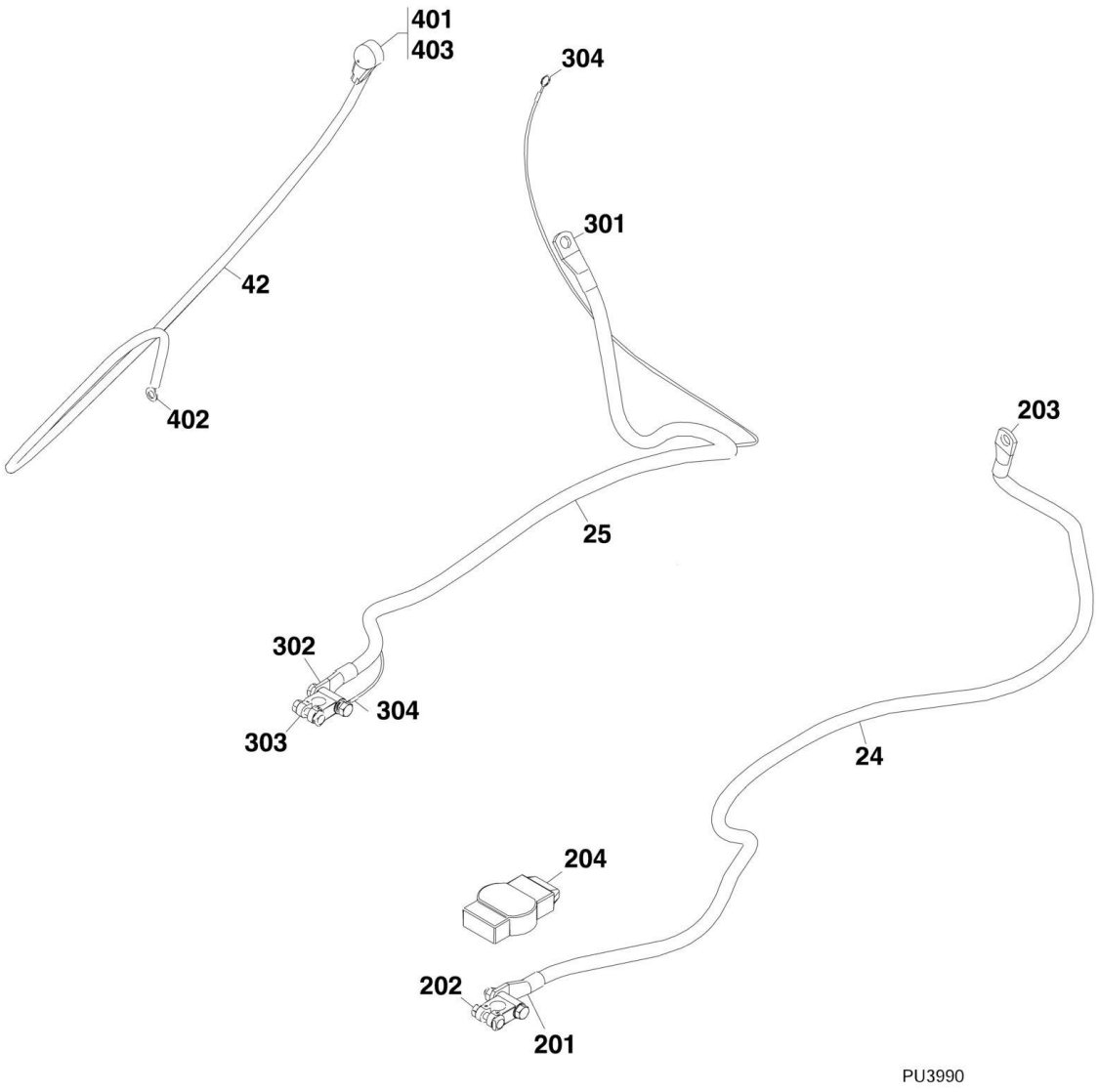
401
403
304
301
42
402
203
25
302
304
303
24
204
202
201
PU3990

FIGURE 10-3. BATTERY AND VEHICLE GROUND CABLES (644E SN 0160048717 to Present, Including 0160045421; 944E SN 0160041827 to Present)

ITEM	PART NUMBER	QTY	DESCRIPTION	REV
	1001120740	Ref	ENGINE ELECTRICAL INSTALLATION, (not available to order, see items 1 thru 50 for service)	G
1	0100011	AR	LOCTITE 242	
2	0641405	3	HEX HD CAPSCREW, 1/4-20X5/8	
3	0761012	1	HEX HD CAPSCREW, M10X25, GR8.8, (torque to 32 lb-ft)	
4	0761210	2	HEX HD CAPSCREW, M12X20, GR8.8	
5	0791505	2	SCREW, 5/16-18X5/8	
6	0791606	9	SCREW, 3/8-16X3/4, (torque to 35 lb-ft)	
8	3291001	2	HEX NUT, M10X1.5	
9	4711400	3	WASHER, 1/4	
11	4812000	1	WASHER, 10mm	
12	4832000	2	LOCKWASHER, 10mm	
13	4832100	2	LOCKWASHER, 12mm	
15		Ref	TRANSMISSION HARNESS, (See TRANSMISSION HARNESS for Breakdown)	
17	7301529	1	BUSS BAR, 90	
20	8584001	AR	TIE WRAP, (not shown)	
21	90206196	12 in	TRIM-LOK	
22	0641676	2	HEX HD CAPSCREW, 3/8-16X9-1/2, GR5	
23	1001155219	2	12V BATTERY	
24	1001114822	1	POSITIVE BATTERY CABLE, (944E) **(SN 0160041827 through 0160049550)**	
24	8270148	1	BATTERY CLAMP ASSY, (944E), (includes hardware) **(SN 0160041827 through 0160049550)**	
24	1001147881	1	POSITIVE BATTERY CABLE, (includes items 201 thru 204) **(644E SN 0160048717 to Present, Including 0160045421; 944E SN 0160049678 to Present)**	A
25	1001114823	1	NEGATIVE BATTERY CABLE, (944E) **(SN 0160041827 through 0160049550)**	
25	8270147	1	BATTERY CLAMP ASSY, (944E), (includes hardware) **(SN 0160041827 through 0160049550)**	
25	1001147882	1	NEGATIVE BATTERY CABLE, (includes items 301 thru 304) **(644E SN 01648717 to Present, Including 0160045421; 944E SN 0160049678 to Present)**	A
26	1001114824	1	POSITIVE BATTERY JUMPER CABLE	
26	8270148	1	BATTERY CLAMP ASSY, (includes hardware)	
27	1001114825	1	NEGATIVE BATTERY JUMPER CABLE	
27	8270147	1	BATTERY CLAMP ASSY, (includes hardware)	
28		Ref	ENGINE HARNESS, (See ENGINE HARNESS for Breakdown)	
29		Ref	GRID HEATER CABLE, (See POWER COMPONENTS for Breakdown)	
30		Ref	BATTERY CABLE, (battery to fuse), (See POWER COMPONENTS for Breakdown)	
31	1001121022	1	BATTERY TRAY	
32	1001120883	1	BATTERY COVER	
33	1001120884	1	BATTERY HOLD DOWN PLATE	
34	1001121062	1	BATTERY COVER SUPPORT	
35	0641606	2	HEX HD CAPSCREW, 3/8-16X3/4, GR5	
36	4711600	2	WASHER, 3/8	
37	4761600	4	LOCKWASHER, 3/8	
38	1001122417	1	BATTERY JUMPER POST MOUNT	

ITEM	PART NUMBER	QTY	DESCRIPTION	REV
39	1001122421	1	BATTERY JUMPER POST TERMINAL, (includes hardware and cap)	
40	1001122480	1	POSITIVE JUMP START CABLE	
41	1001131761	1	TWO POSITION BUSS BAR	
42	1001119904	1	GROUND BATTERY CABLE, (alternator to starter), (includes items 401 thru 403)	A
43		Ref	FAN RELAY HARNESS, (See FAN RELAY HARNESS for Breakdown)	
44	0760810	2	HEX HD CAPSCREW, M8X20, GR8.8, (torque to 28 Nm/21 lb-ft)	
45	1321339	2	3IN CLAMP	
46	8750043	2	NUT, M8	
47	0681610	2	HEX HD CAPSCREW, 3/8-16X1-1/4, GR8, (torque to 40 lb-ft/55 Nm)	
48	3271601	2	HEX NUT, 3/8-16, GR8	
49	7300344	2	NEGATIVE BUS BAR	
50	7310012	1	CABLE ASSEMBLY	
101	0700815	1	HEX HD CAPSCREW, M8X35, GR8.8	
104	6611172	2	GROUND STRAP	
108	8305654	4	HEX LOCKNUT, M8X1.25	
109	8307222	4	WASHER, 8mm	
110	8310647	8	LOCKWASHER, 8mm, (external tooth)	
201	4461270	1	3/8IN TERMINAL RING	
202	8270148	1	TERMINAL	
203	1001117118	1	1/2IN TERMINAL RING	
204	N.S.S.	1	BOOT	
301	1001117118	1	1/2IN TERMINAL RING	
302	4461270	1	3/8IN TERMINAL RING	
303	8270147	1	BATTERY CLAMP	
304	8220164	2	3/8IN TERMINAL RING	
401	8220116	1	1/4IN TERMINAL RING	
402	8220115	1	3/8IN TERMINAL RING	
403	N.S.S.	1	BOOT	

FIGURE 10-4. POWER COMPONENTS 644E (SN 17569 through 20115, SN 0160002519 through 0160003672, Excluding 19557 and 0160003489)

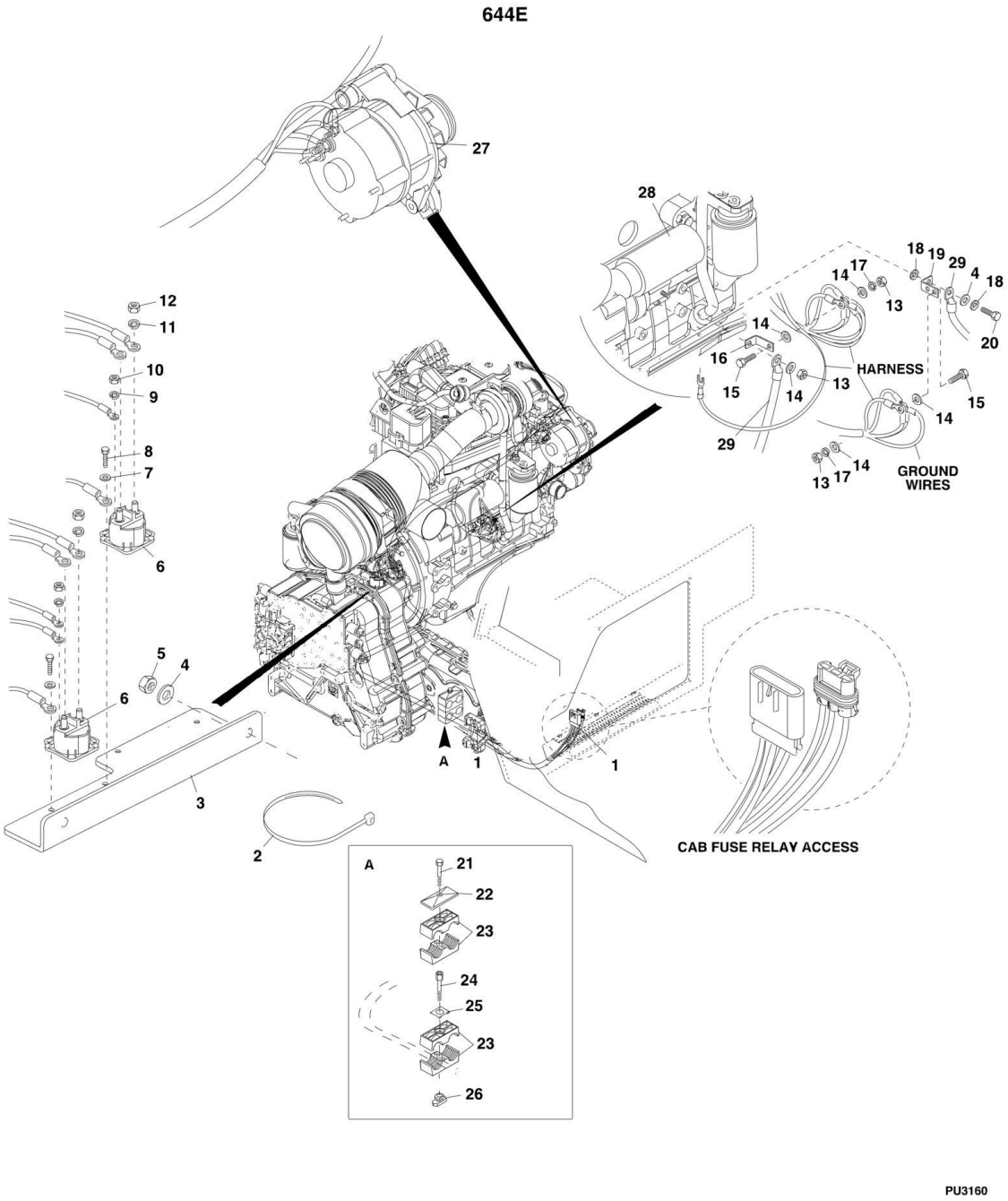

FIGURE 10-4. POWER COMPONENTS 644E (SN 17569 through 20115, SN 0160002519 through 0160003672, Excluding 19557 and 0160003489)

ITEM	PART NUMBER	QTY	DESCRIPTION	REV
1	7300339	1	POWER HARNESS	
2	8584001	AR	TIE WRAP	
3	7300853	1	RELAY MOUNTING BRACKET	
4	8307220	3	PLAIN WASHER, 12mm	
5	8305044	3	HEX NUT, M12X1.75	
6	10167789	2	3 POST WITH DIODE RELAY	
7	8307219	4	PLAIN WASHER, M6	
8	8303545	4	HEX HD CAPSCREW, M6X16, GR8.8, (torque to 7-12.5 Nm)	
9	8307003	2	LOCKWASHER, #10	
10	8305003	2	HEX NUT, #10-32	
11	8307004	4	LOCKWASHER, 0.312	
12	8305006	4	HEX NUT, 0.312-18, GR2	
13	8305038	3	HEX NUT, M10-1.5	
14	8307221	5	PLAIN WASHER, 10mm	
15	8303777	2	HEX HD CAPSCREW, M10X35, GR8.8, (torque to 43 Nm)	
16	6621412	1	STARTER TERMINAL, 90	
17	8307023	2	SPRING LOCKWASHER, 10mm	
18	8310650	2	LOCKWASHER, M12, (external tooth)	
19	7300344	1	NEGATIVE STARTER BUS BAR	
20	8303533	1	HEX HD CAPSCREW, M12X20, GR8.8, (torque to 43 Nm)	
21	8303528	1	HEX HD CAPSCREW, M8X65, GR8.8	
22	8750025	1	TWIN COVER PLATE	
23	8750024	2	TWIN CLAMP SET, 1.18 DIA	
24	8750039	1	METRIC BOLT STACKING	
25	8750017	1	LOCKING PLATE	
26	8750043	1	RAIL NUT, M8	
27		Ref	ALTERNATOR, (See ENGINE AND ATTACHING PARTS SECTION for Breakdown)	
28		Ref	STARTER, (See ENGINE AND ATTACHING PARTS SECTION for Breakdown)	
29		Ref	FRAME GROUNDING HARDWARE, (See BATTERY AND VEHICLE GROUND CABLES for Breakdown)	

FIGURE 10-5. POWER COMPONENTS 644E (SN 0160003690 through 0160043356, Including 19557, 20118 and 0160003489)

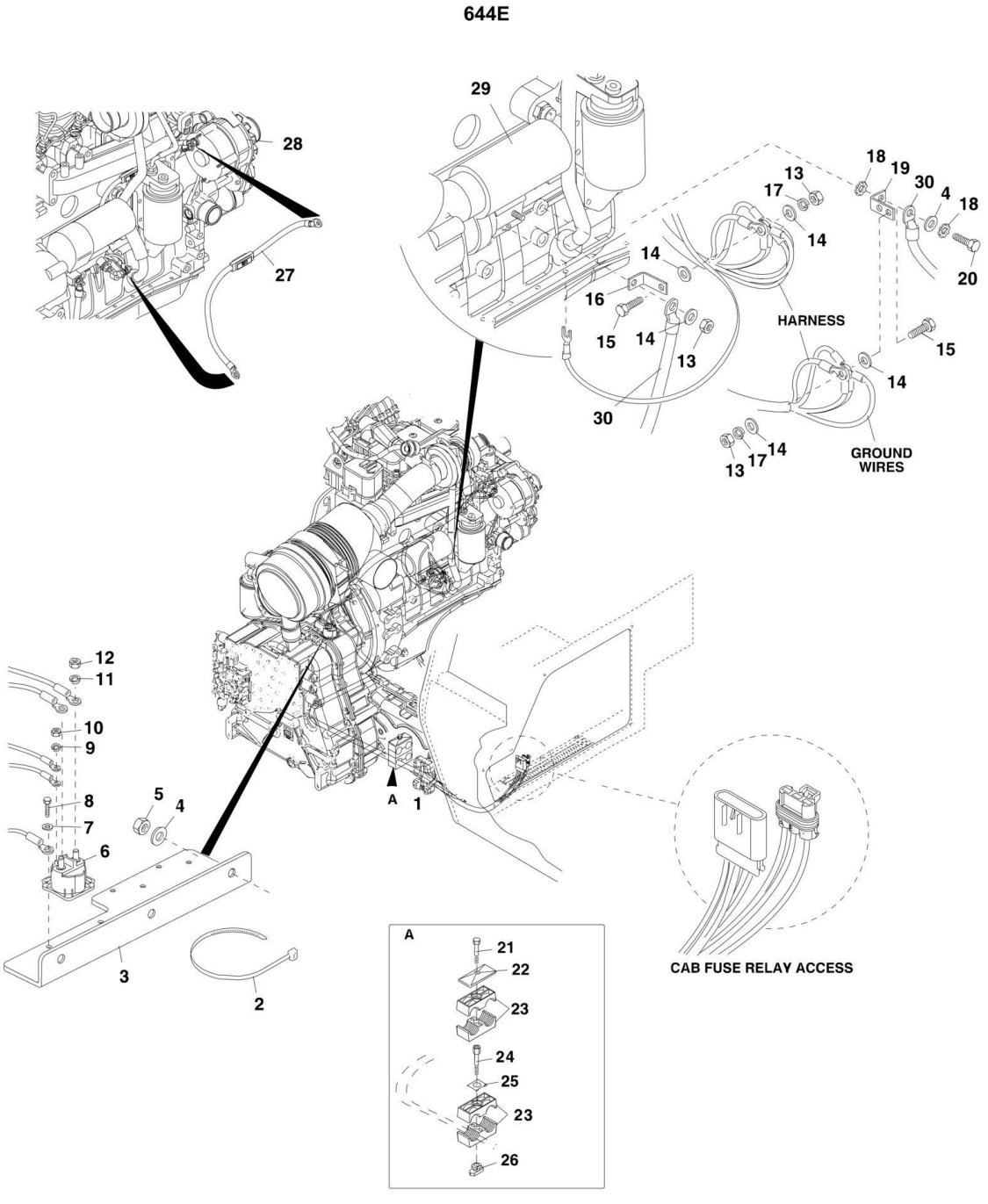

FIGURE 10-5. POWER COMPONENTS 644E (SN 0160003690 through 0160043356, Including 19557, 20118 and 0160003489)

ITEM	PART NUMBER	QTY	DESCRIPTION	REV
1	4922986	1	POWER HARNESS **(SN 0160003690 through 0160014863)**	
1	4923359	1	POWER HARNESS **(SN 0160014889 through 0160043356)**	
2	8584001	AR	TIE WRAP	
3	7300853	1	RELAY MOUNTING BRACKET	
4	8307220	4	PLAIN WASHER, 12mm	
5	8305044	3	HEX NUT, M12X1.75	
6	10167789	1	3 POST WITH DIODE RELAY	
7	8307219	2	PLAIN WASHER, 6mm	
8	8303545	2	HEX HD CAPSCREW, M6X16, GR8.8, (torque to 7-12.5 Nm)	
9	8307003	1	LOCKWASHER, #10	
10	8305003	1	HEX NUT, #10-32	
11	8307004	2	LOCKWASHER, 5/16	
12	8305006	2	HEX NUT, 5/16-18, GR2	
13	8305038	3	HEX NUT, M10X1.5	
14	8307221	5	PLAIN WASHER, 10mm	
15	8303777	2	HEX HD CAPSCREW, M10X35, GR8.8, (torque to 43 Nm)	
16	6621412	1	STARTER TERMINAL, 90	
17	8307023	2	SPRING LOCKWASHER, 10mm	
18	8310650	2	LOCKWASHER, 12m, (external tooth)	
19	7300344	1	NEGATIVE STARTER BUS BAR	
20	8303533	1	HEX HD CAPSCREW, M12X20, GR8.8, (torque to 43 Nm)	
21	8303528	1	HEX HD CAPSCREW, M8X65, GR8.8	
22	8750025	1	TWIN COVER PLATE	
23	8750024	2	TWIN CLAMP SET, 1.18 DIA	
24	8750039	1	BOLT STACKING, METRIC	
25	8750017	1	LOCKING PLATE	
26	8750043	1	RAIL NUT, M8	
27	7310012	1	FUSIBLE LINK ASSEMBLY	
28		Ref	ALTERNATOR, (See ENGINE AND ATTACHING PARTS SECTION for Breakdown)	
29		Ref	STARTER, (See ENGINE AND ATTACHING PARTS SECTION for Breakdown)	
30		Ref	FRAME GROUNDING HARDWARE, (See BATTERY AND VEHICLE GROUND CABLES for Breakdown)	

FIGURE 10-6. POWER COMPONENTS 944E (Prior to SN 0160041827)

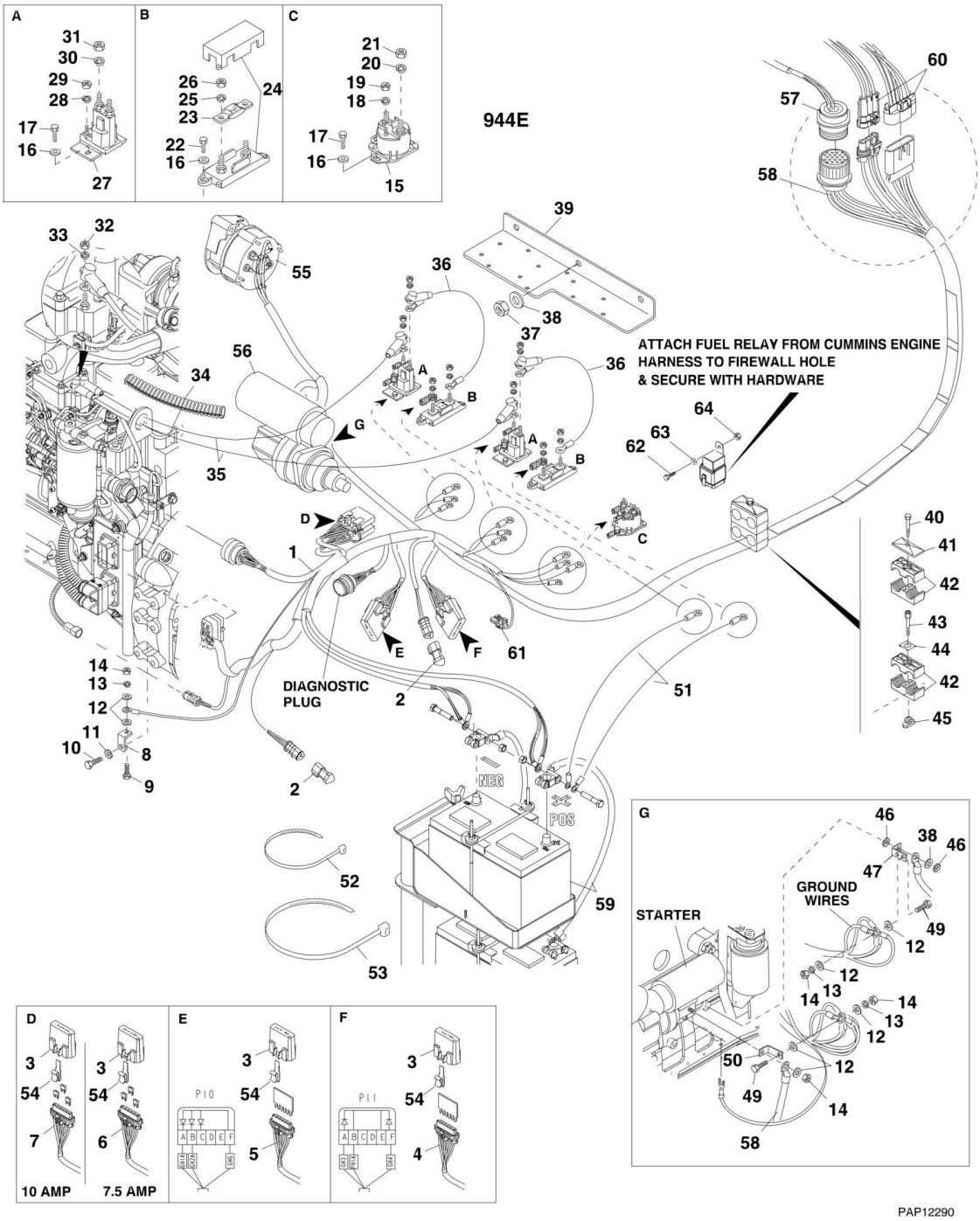

FIGURE 10-6. POWER COMPONENTS 944E (Prior to SN 0160041827)

ITEM	PART NUMBER	QTY	DESCRIPTION	REV
1	7301412	1	ECM VEHICLE POWER HARNESS, (includes items 2 thru 7) **(SN 17569 through 20123, SN 0160002514 through 0160010063)**	
1	4923216	1	ECM VEHICLE POWER HARNESS, (includes items 2 thru 7) **(SN 0160010100 through 0160014857)**	
1	1001093342	1	ECM VEHICLE POWER HARNESS, (includes items 2 thru 7) **(SN 0160014891 through 0160041823)**	
2	8220553	2	RESISTOR	
3	8220357	4	CLEAR VES-PAC COVER	
4	8220364	1	2 DIODE CIRCUIT BOARD	
5	8220366	1	3 DIODE CIRCUIT BOARD	
6	8229243	3	MINI FUSE, 7.5 AMP	
7	8226234	3	MINI FUSE, 10 AMP	
8	7301529	1	BUSS BAR, 90	
9	8303798	1	HEX HD CAPSCREW, M10X25, GR8.8, (torque to 43 Nm)	
10	8303533	1	HEX HD CAPSCREW, M12X20, GR8.8, (torque to 43 Nm)	
11	8310650	1	LOCKWASHER, 12mm, (external tooth)	
12	8307221	6	WASHER, 10mm	
13	8307023	3	LOCKWASHER, 10mm	
14	8305038	4	HEX NUT, M10X1.5	
15	10167789	1	3 POST RELAY	
16	8307219	10	PLAIN WASHER, 6mm	
17	8303545	6	HEX HD CAPSCREW, M6X16, GR8.8, (torque to 7-12.5 Nm)	
18	8307003	1	LOCKWASHER, #10	
19	8305003	1	HEX NUT, #10-32	
20	8307004	2	LOCKWASHER, 5/16	
21	8305006	2	HEX NUT, 5/16-18	
22	8303544	4	HEX HD CAPSCREW, M6X20, GR8.8, (torque to 7-12.5 Nm)	
23	8229259	2	125A FUSE, MEGA BOLT ON	
24	8229260	2	MEGA FUSE BLOCK, (includes items 25 & 26)	
25	N.S.S.	2	LOCKWASHER, 8mm	
26	N.S.S.	2	HEX NUT, 8mm	
27	8225122	2	4 POST RELAY, (includes items 28 thru 31)	
28	8307003	2	LOCKWASHER, #10	
29	8305003	2	HEX NUT, #10-32	
30	N.S.S.	2	LOCKWASHER, 5/16	
31	N.S.S.	2	HEX NUT, 5/16-24	
32	8305047	2	HEX LOCKNUT, M6X1	
33	8310687	2	LOCKWASHER, 6mm, (external tooth)	
34	7125811	1	CONDUIT, 0.75 IDX8 LG, (cut to fit)	
35	7301450	2	GRID HEATER CABLE, RELAY TO GRID HEATER	
36	7301448	2	GRID HEATER CABLE, FUSE TO RELAY	
37	8305044	3	HEX NUT, M12X1.75	
38	8307220	4	PLAIN WASHER, 12mm	
39	7300853	1	RELAY MOUNTING BRACKET	
40	8303528	1	HEX HD CAPSCREW, M8X65, GR8.8	
41	8750025	1	TWIN COVER PLATE	
42	8750024	2	TWIN CLAMP SET, 1.18 DIA	
43	8750039	1	BOLT STACKING, METRIC	
44	8750017	1	LOCKING PLATE	
45	8750043	1	RAIL NUT, M8	

ITEM	PART NUMBER	QTY	DESCRIPTION	REV
46	8310650	2	LOCKWASHER, 12mm, (external tooth)	
47	7300344	1	NEGATIVE STARTER BUS BAR	
48	8303533	1	HEX HD CAPSCREW, M12X20, GR8.8, (torque to 43 Nm)	
49	8303777	2	HEX HD CAPSCREW, M10X35, GR8.8, (torque to 43 Nm)	
50	6621412	1	STARTER TERMINAL, 90	
51	7301449	2	GRID HEATER CABLE, BATTERY TO FUSE, **(Prior to SN 0160010079, Excluding 0160009717)**	
51	4923225	2	GRID HEATER CABLE, BATTERY TO FUSE **(SN 0160010079 to Present, Including 0160009717)**	
52	8584001	AR	TIE WRAP	
53	8584003	AR	TIE WRAP	
54	1380165	4	MOUNTING CLIP **(SN 0160012745 through 0160041826)**	
55		Ref	ALTERNATOR, (See ENGINE AND ATTACHING PARTS SECTION for Breakdown)	
56		Ref	STARTER, (See ENGINE AND ATTACHING PARTS SECTION for Breakdown)	
57		Ref	ECM CAB HARNESS, (See CONTROLS SECTION for Breakdown)	
58		Ref	FUSE AND RELAY ACCESS, (See CAB SECTION for Breakdown)	
59		Ref	POSITIVE BATTERY CABLE, (See BATTERY AND VEHICLE GROUND CABLES for Breakdown)	
60		Ref	OPEN CAB HARNESS, (See OPEN CAB ELECTRICAL COMPONENTS for Breakdown)	
61		Ref	SENSOR HARNESS, (See SENSOR COMPONENTS for Breakdown)	
62	8303837	1	PAN HEAD SCREW, #10-24X3/4	
63	8307111	1	PLAIN WASHER, M10	
64	8310085	1	HEX LOCKNUT, #10-24	

FIGURE 10-7. POWER COMPONENTS (644E SN 0160048717 to Present, Including 0160045421; 944E SN 0160041827 to Present)

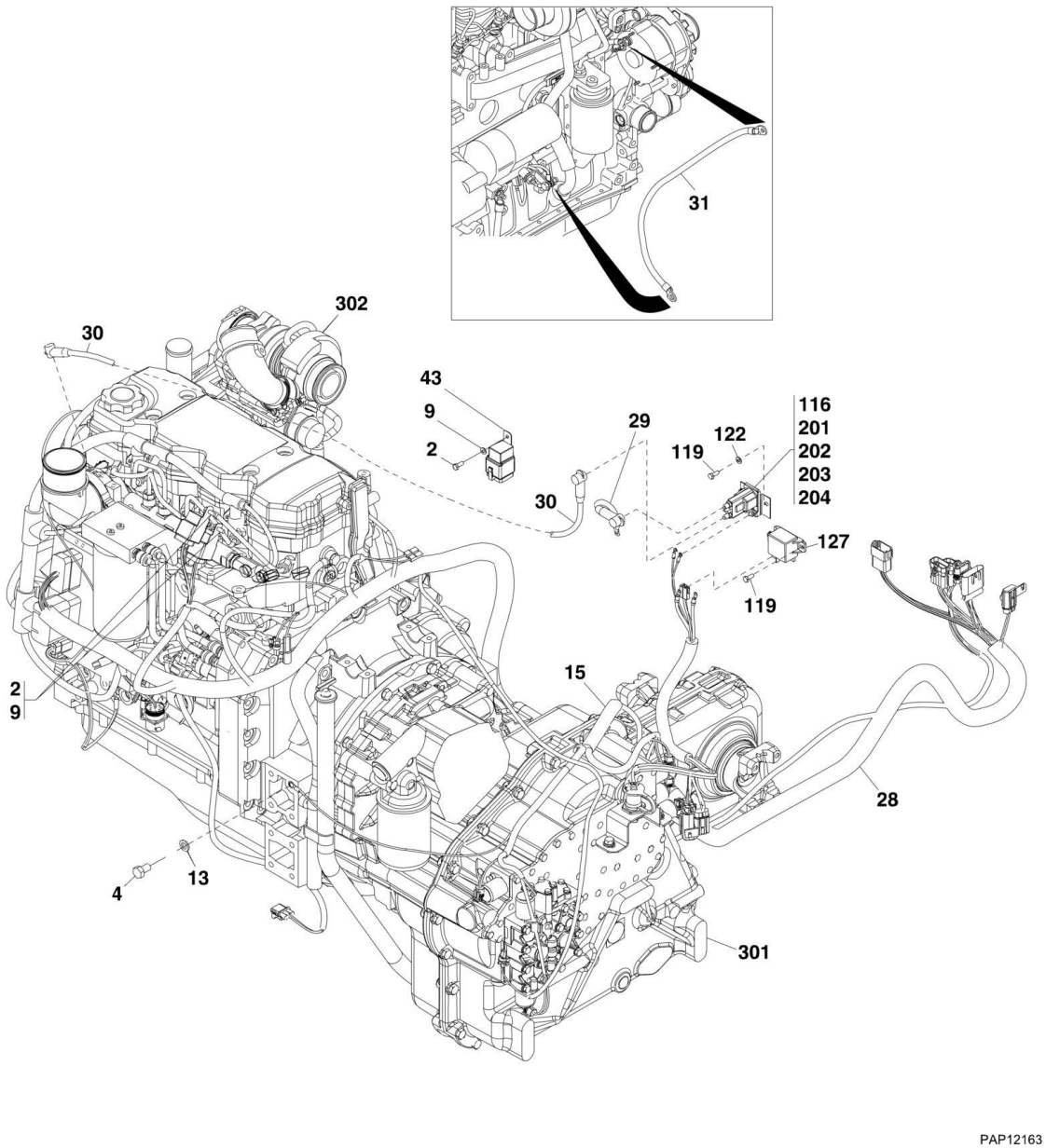

FIGURE 10-7. POWER COMPONENTS (644E SN 0160048717 to Present, Including 0160045421; 944E SN 0160041827 to Present)

ITEM	PART NUMBER	QTY	DESCRIPTION	REV
2	0641405	3	HEX HD CAPSCREW, 1/4-20X5/8, GR5	
4	0761210	1	HEX HD CAPSCREW, M12X20, GR8.8	
9	4711400	3	WASHER, 1/4	
13	4832100	1	SPRING LOCKWASHER, 12mm	
15		Ref	TRANSMISSION HARNESS, (See TRANSMISSION HARNESS for Breakdown)	
20	8584001	AR	TIE WRAP, (not shown)	
28		Ref	ENGINE HARNESS, (See ENGINE HARNESS for Breakdown)	
29	1001119969	1	GRID HEATER CABLE	
30	1001120636	1	GRID HEATER CABLE, (battery to fuse)	
31	1001119904	1	NEGATIVE ALTERNATOR CABLE	
43		Ref	FAN RELAY HARNESS, (See FAN RELAY HARNESS for Breakdown)	
116	8225122	2	4 POST RELAY, (includes items 201 thru 204)	AA
119	8303545	4	HEX HD CAPSCREW, M6X14, GR8.8	
122	8307219	4	WASHER, 6mm	
127	77383377	1	STARTER RELAY, (includes hardware)	
201	8307003	2	LOCKWASHER, #10	
202	8305003	2	HEX NUT, #10	
203	N.S.S.	2	LOCKWASHER, 5/16	
204	N.S.S.	2	HEX NUT, 5/16	
301		Ref	ZF TRANSMISSION, (See DRIVE TRAIN SECTION for Breakdown)	
302		Ref	CUMMINS ENGINE, (See ENGINE AND ATTACHING PARTS SECTION for Breakdown)	

FIGURE 10-8. OPEN CAB ELECTRICAL COMPONENTS (SN 17569 through 19041)

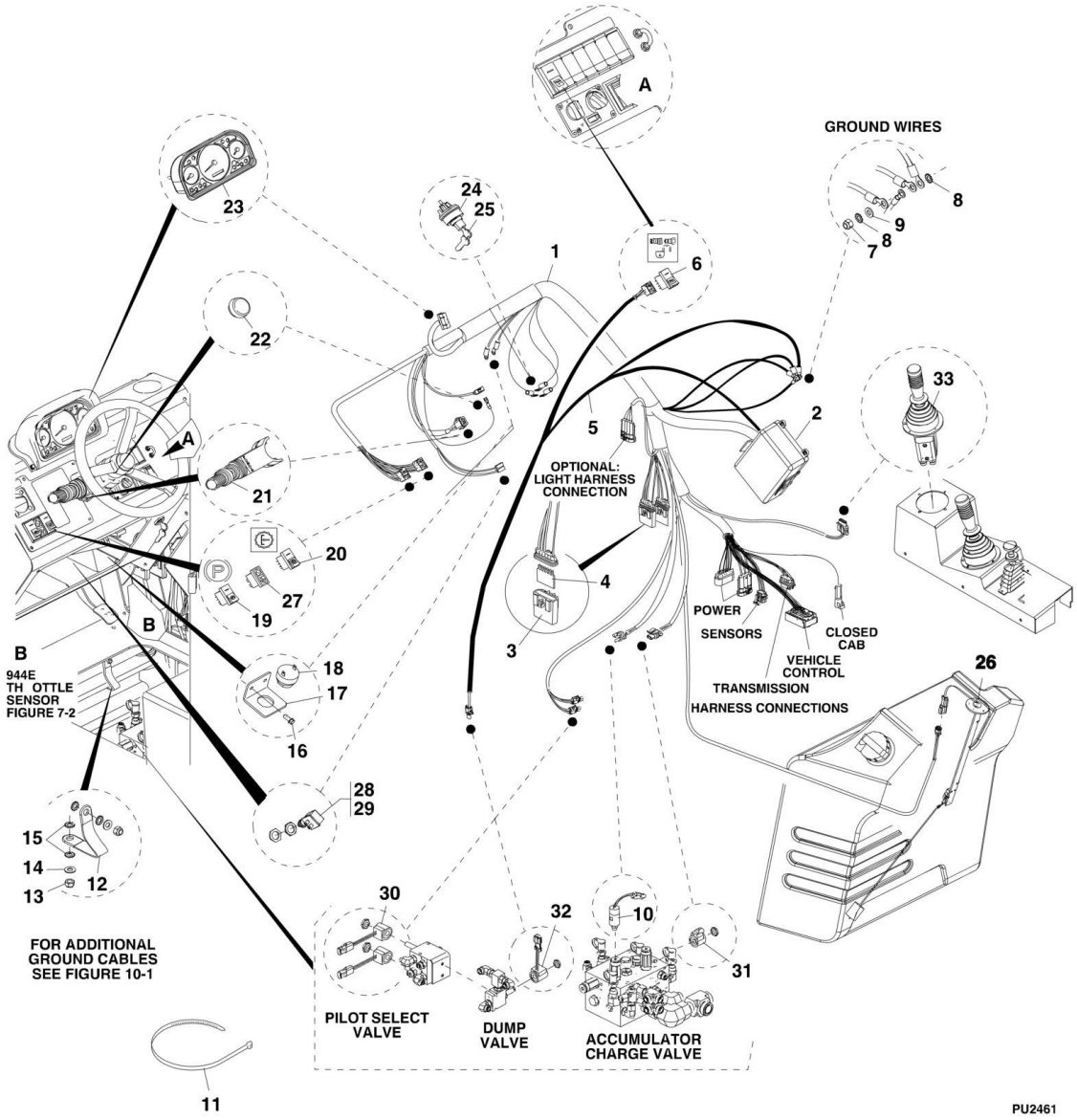

FIGURE 10-8. OPEN CAB ELECTRICAL COMPONENTS (SN 17569 through 19041)

ITEM	PART NUMBER	QTY	DESCRIPTION	REV
1		Ref	OPEN CAB HARNESS, (not available to order, use 7300336 for replacement)	
2	8220362	1	FUSE/RELAY BOX, (See FUSES, RELAYS AND FLASHER BOX for Breakdown)	
3	8220357	2	CLEAR VES-PAC COVER	
4	8220363	2	CIRCUIT BOARD, 3 DIODE	
5	7301600	1	AUXILIARY HYDRAULIC DUMP VALVE HARNESS	
6	8223050	1	AUXILIARY HYDRAULIC DUMP VALVE SWITCH	
7	8305652	1	HEX LOCKNUT, M6X1	
8	8310687	2	LOCKWASHER, 6mm, (external tooth)	
9	8307219	1	PLAIN WASHER, 6mm, (metric)	
10	8223241	1	BRAKE PRESSURE SWITCH	
11	8584001	AR	TIE WRAP	
12	6611172	1	GROUND CABLE, CAB TO CAB SUPPORT	
13	8305654	2	HEX LOCKNUT, M8X1.25	
14	8307222	2	PLAIN WASHER, 8mm	
15	8310647	4	LOCKWASHER, 8mm, (external tooth)	
16	8310683	2	HEX HD SELF TAPPING SCREW, 5/16-18X3/4	
17	7301147	1	BUZZER BRACKET	
18	8270627	1	ALARM BUZZER, 12V	
19	8223054	1	PARK BRAKE SWITCH	
20	8223071	1	TRANSMISSION DISCONNECT SWITCH	
21	8223072	1	SELECTOR TRANSMISSION CONTROL, (includes attaching hardware)	
22	8720017	1	HORN BUTTON WITH COVER SWITCH	
23	8220360	1	DASH PANEL	
24	1101202	1	IGNITION SWITCH, (includes item 25)	
25	1101203	1	IGNITION KEY, (set of 2 keys)	
26		Ref	FUEL LEVEL SENDER, (See ENGINE AND ATTACHING PARTS SECTION for Breakdown)	
27		Ref	ECM INDICATOR SWITCH, (See CONTROLS SECTION for Breakdown)	
28		Ref	STABIL-TRAK SWITCH, (See CONTROLS SECTION for Breakdown)	
29		Ref	BRAKE SWITCH, (See OPTIONS SECTION for Breakdown)	
30		Ref	PILOT SELECT VALVE, (See HYDRAULIC COMPONENTS SECTION for Breakdown)	
31		Ref	ACCUMULATOR CHARGE VALVE, (See HYDRAULIC COMPONENTS SECTION for Breakdown)	
32		Ref	DUMP VALVE, (See HYDRAULIC COMPONENTS SECTION for Breakdown)	
33		Ref	JOYSTICK CONTROL VALVE, (See HYDRAULIC CIRCUITS SECTION for Breakdown)	

FIGURE 10-9. OPEN CAB ELECTRICAL COMPONENTS (644E SN 19042 through 20123, SN 0160002514 through 0160034284; 944E SN 19042 through 20123, SN 0160002514 through 0160034278)

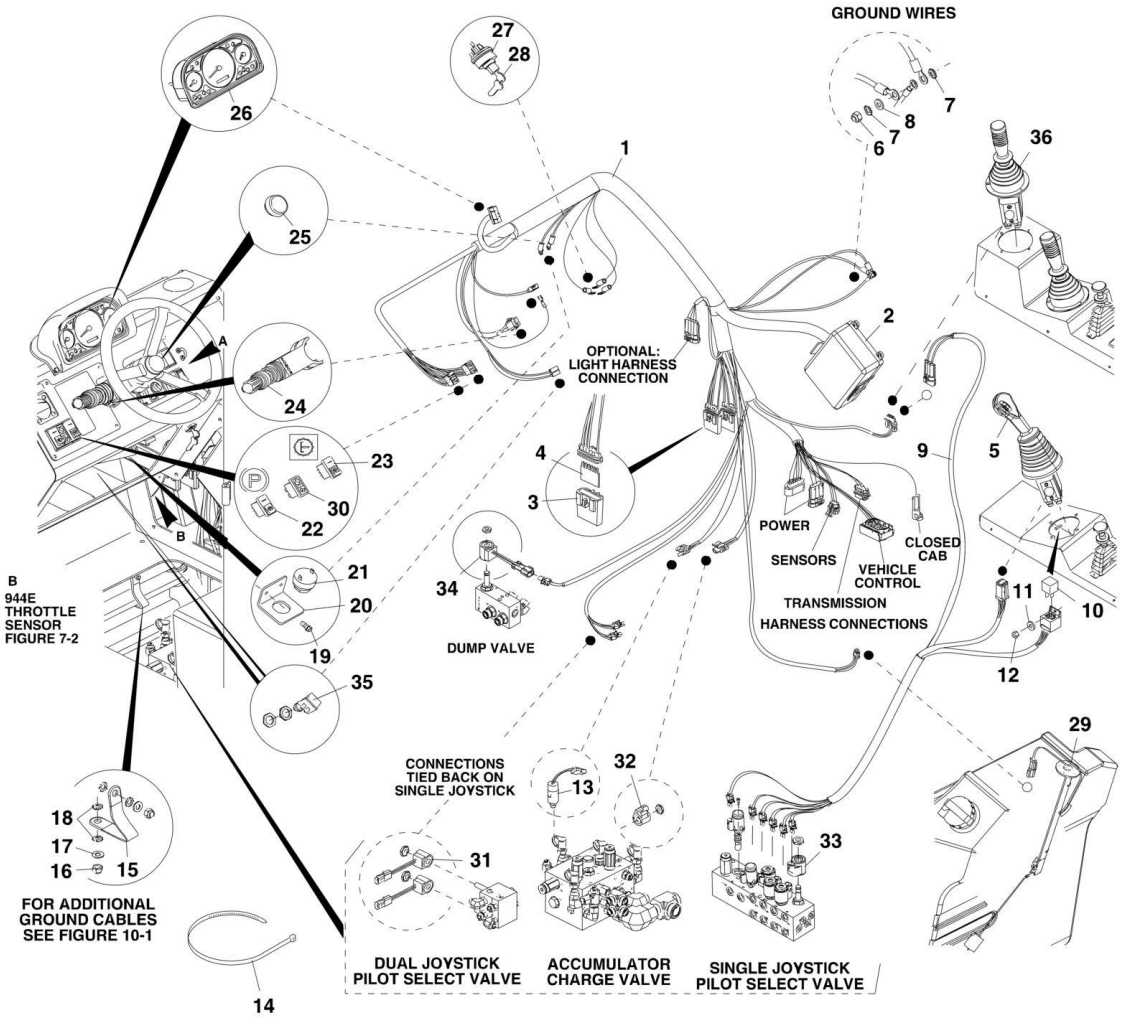

FIGURE 10-9. OPEN CAB ELECTRICAL COMPONENTS (644E SN 19042 through 20123, SN 0160002514 through 0160034284; 944E SN 19042 through 20123, SN 0160002514 through 0160034278)

ITEM	PART NUMBER	QTY	DESCRIPTION	REV
1	7300336	1	OPEN CAB HARNESS, (includes items 2 thru 4) **(644E SN 19042 through 20123, SN 0160002514 through 0160008489; 944E SN 19042 through 20123, SN 0160002514 through 0160008510)**	
1	4923054	1	OPEN CAB HARNESS, (includes items 2 thru 4) **(644E SN 0160008490 through 0160034284; 944E SN 0160008511 through 0160034278)**	B
2	8220362	1	FUSE/RELAY BOX, (See FUSES, RELAYS AND FLASHER BOX for Breakdown)	
3	8220357	2	CLEAR VES-PAC COVER	
4	8220363	2	CIRCUIT BOARD, 3 DIODE	
5		Ref	JOYSTICK CONTROL VALVE, (See CONTROLS SECTION for Breakdown)	
6	8305652	1	HEX LOCKNUT, M6X1	
7	8310687	2	LOCKWASHER, 6mm, (external tooth)	
8	8307219	1	PLAIN WASHER, 6mm	
9	7300353	1	SINGLE JOYSTICK HARNESS	
10	8225119	1	SEALED RELAY	
11	8310390	1	WASHER, M5	
12	8310188	1	HEX NUT, M5X0.8	
13	8223241	1	BRAKE PRESSURE SWITCH	
14	8584001	AR	TIE WRAP	
15	6611172	1	GROUND CABLE, CAB TO CAB SUPPORT	
16	8305654	2	HEX LOCKNUT, M8X1.25	
17	8307222	2	PLAIN WASHER, 8mm	
18	8310647	4	LOCKWASHER, 8mm, (external tooth)	
19	8310683	2	HEX HD SELF TAPPING, 5/16-18X3/4	
20	7301147	1	BUZZER BRACKET	
21	8270627	1	ALARM BUZZER, 12V	
22	8223054	1	PARK BRAKE SWITCH	
23	8223071	1	TRANSMISSION DISCONNECT SWITCH	
24	8223072	1	SELECTOR TRANSMISSION CONTROL, (includes attaching hardware)	
25	7138878	1	HORN BUTTON WITH COVER SWITCH	
26	8220360	1	DASH PANEL	
27	1101202	1	IGNITION SWITCH, (includes item 28)	
28	1101203	1	IGNITION KEY, (set of 2 keys)	
29		Ref	FUEL LEVEL SENDER, (See ENGINE AND ATTACHING PARTS SECTION for Breakdown)	
30		Ref	ECM INDICATOR SWITCH, (See CONTROLS SECTION for Breakdown)	
31		Ref	PILOT SELECT VALVE, (See HYDRAULIC COMPONENTS SECTION for Breakdown)	
32		Ref	ACCUMULATOR CHARGE VALVE, (See HYDRAULIC COMPONENTS SECTION for Breakdown)	
33		Ref	SOLENOID, (See HYDRAULIC COMPONENTS SECTION for Breakdown)	
34		Ref	DUMP VALVE, (See HYDRAULIC COMPONENTS SECTION for Breakdown)	
35		Ref	STABIL-TRAK SWITCH, (See CONTROLS SECTION for Breakdown)	
36		Ref	JOYSTICK CONTROL, (See HYDRAULIC CIRCUITS SECTION for	

ITEM	PART NUMBER	QTY	DESCRIPTION	REV
			Breakdown)	

FIGURE 10-10. OPEN CAB ELECTRICAL COMPONENTS (644E SN 0160034285 to Present; 944E SN 0160034279 to Present)

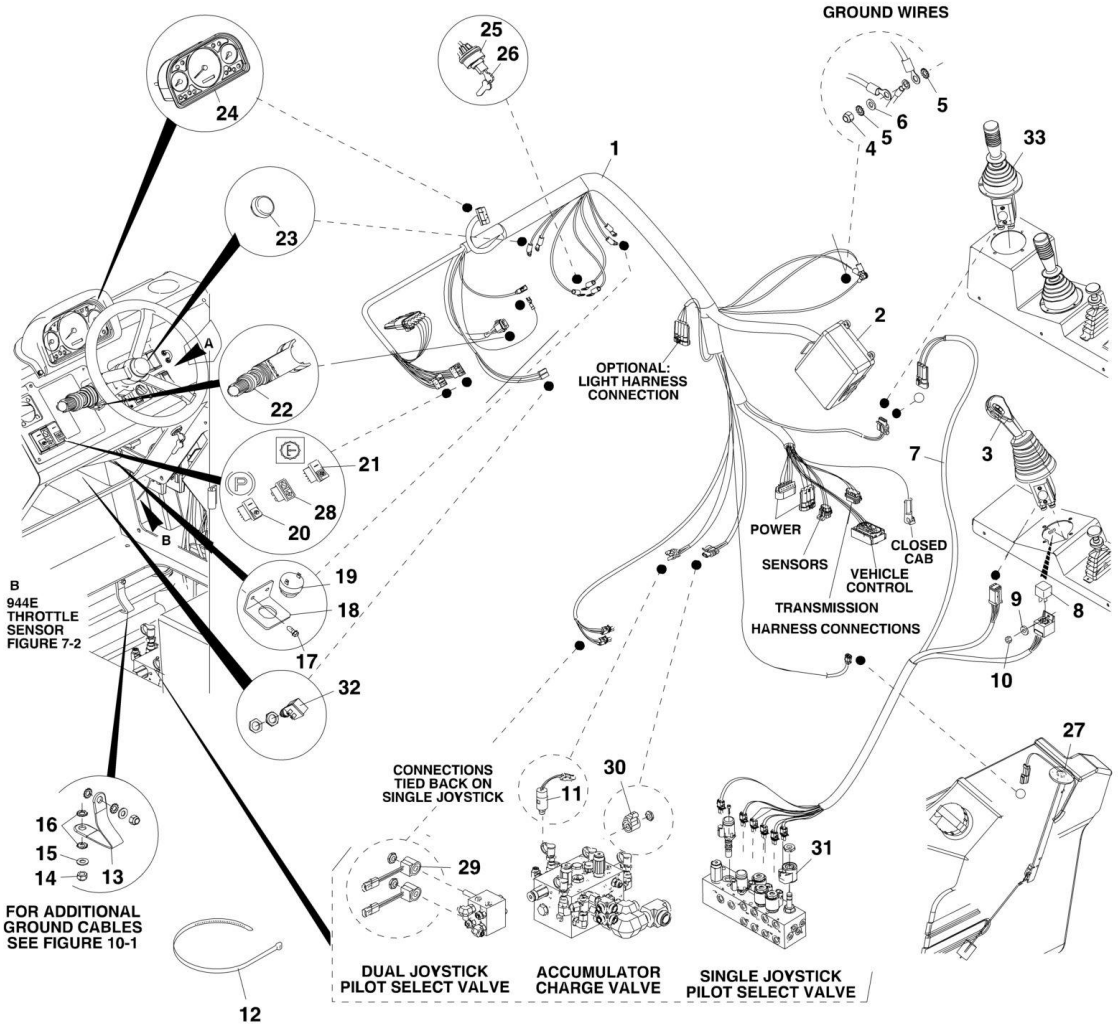

FIGURE 10-10. OPEN CAB ELECTRICAL COMPONENTS (644E SN 0160034285 to Present; 944E SN 0160034279 to Present)

ITEM	PART NUMBER	QTY	DESCRIPTION	REV
1	4923604	1	OPEN CAB HARNESS, (includes items 2)	E
2	70021815	1	FUSE/RELAY BOX, (See FUSES, RELAYS AND FLASHER BOX for Breakdown)	
3		Ref	JOYSTICK CONTROL VALVE, (See CONTROLS SECTION for Breakdown)	
4	8305652	1	HEX LOCKNUT, M6-1.0	
5	8310687	2	LOCKWASHER, 6mm, (external tooth)	
6	8307219	1	PLAIN WASHER, 6mm	
7	7300353	1	SINGLE JOYSTICK HARNESS	
8	8225119	1	SEALED RELAY	
9	8310390	1	WASHER, 5mm	
10	8310188	1	HEX NUT, M5X0.8	
11	8223241	1	BRAKE PRESSURE SWITCH **(644E Prior to SN 0160039830, Excluding 0160036724, 0160036811, 0160036907 and 0160037012; 944E Prior to SN 0160040124, Excluding 0160034634, 0160036710, 0160036722, 0160036735 and 0160036738)**	
11	1001103494	1	BRAKE PRESSURE SWITCH **(644E SN 0160039830 to Present, Including 0160036724, 0160036811, 0160036907 and 0160037012; 944E SN 0160040124 to Present, Including 0160034634, 0160036710, 0160036722, 0160036735 and 0160036738)**	
12	8584001	AR	TIE WRAP	
13	6611172	1	GROUND CABLE, CAB TO CAB SUPPORT	
14	8305654	2	HEX LOCKNUT, M8X1.25	
15	8307222	2	PLAIN WASHER, 8mm	
16	8310647	4	LOCKWASHER, 8mm, (external tooth)	
17	8310683	2	HEX HD SELF TAPPING, 5/16-18X3/4	
18	7301147	1	BUZZER BRACKET	
19	8270627	1	ALARM BUZZER, 12V	
20	8223054	1	PARK BRAKE SWITCH	
21	8223071	1	TRANSMISSION DISCONNECT SWITCH	
22	8223072	1	SELECTOR TRANSMISSION CONTROL, (includes attaching hardware)	
23	7138878	1	HORN BUTTON WITH COVER SWITCH	
24	8220360	1	DASH PANEL	
25	1101202	1	IGNITION SWITCH, (includes item 26)	
26	1101203	1	IGNITION KEY, (set of 2 keys)	
27		Ref	FUEL LEVEL SENDER, (See ENGINE AND ATTACHING PARTS SECTION for Breakdown)	
28		Ref	ECM INDICATOR SWITCH, (See CONTROLS SECTION for Breakdown)	
29		Ref	PILOT SELECT VALVE, (See HYDRAULIC COMPONENTS SECTION for Breakdown)	
30		Ref	ACCUMULATOR CHARGE VALVE, (See HYDRAULIC COMPONENTS SECTION for Breakdown)	
31		Ref	SOLENOID, (See HYDRAULIC COMPONENTS SECTION for Breakdown)	
32		Ref	STABIL-TRAK SWITCH, (See CONTROLS SECTION for Breakdown)	
33		Ref	JOYSTICK CONTROL, (See HYDRAULIC CIRCUITS SECTION for Breakdown)	

FIGURE 10-11. CLOSED CAB ELECTRICAL COMPONENTS

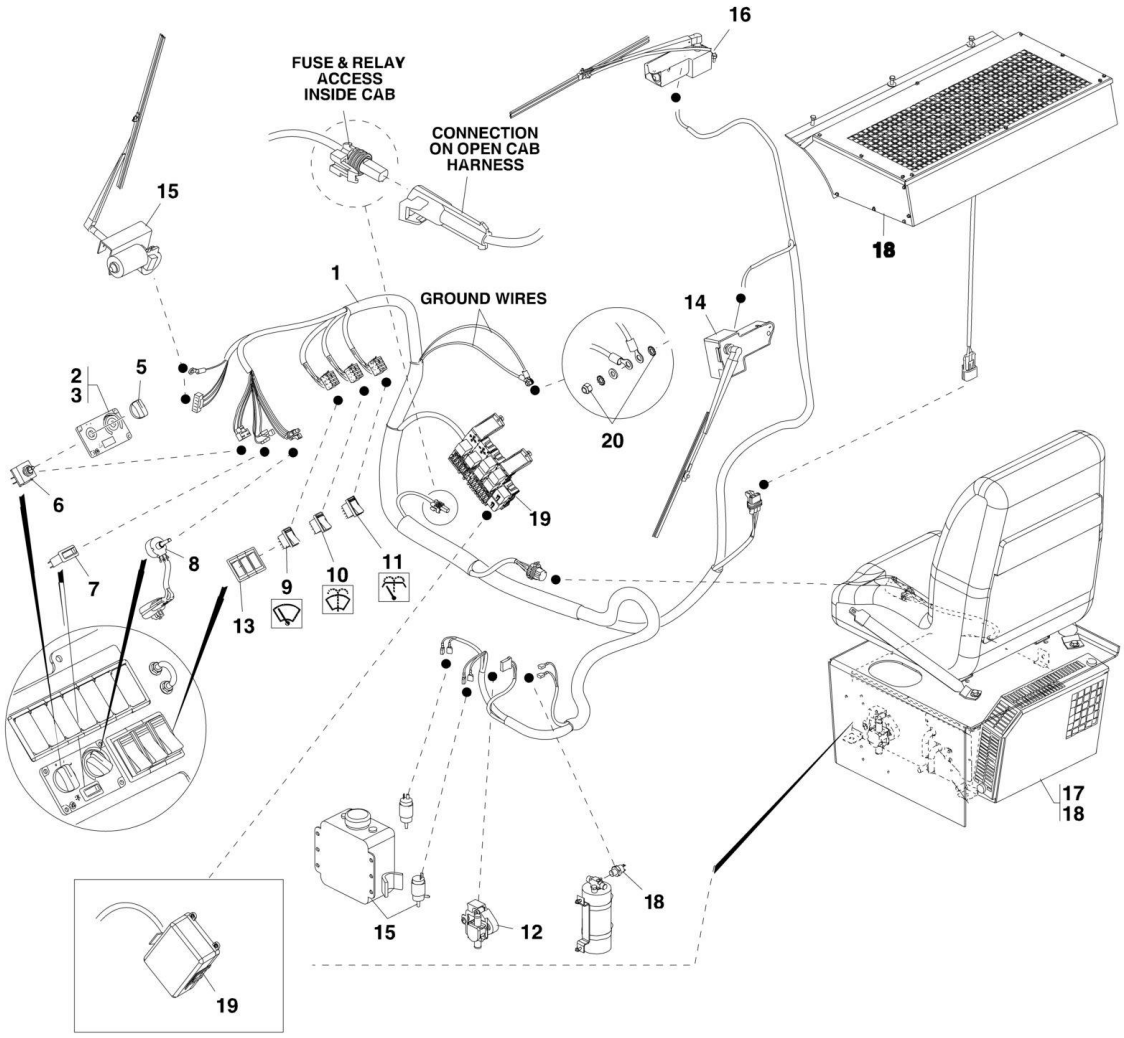

644E SN 19042 THROUGH 20123 & 0160002514 THROUGH 0160034284
944E SN 19042 THROUGH 20123 & 0160002514 THROUGH 0160034278

PAP12170

FIGURE 10-11. CLOSED CAB ELECTRICAL COMPONENTS

ITEM	PART NUMBER	QTY	DESCRIPTION	REV
1	7300411	1	CLOSED CAB HARNESS **(644E SN 17569 through 20123, SN 0160002514 through 0160034284; 944E SN 17569 through 20123, SN 0160002514 through 0160034278)**	H
1	1001092360	1	CLOSED CAB HARNESS **(644E SN 0160034285 to Present; 944E SN 0160034279 to Present)**	A
2	7301260	1	HEATER CONTROL PANEL, (includes items 5, 6 & 8)	
3	8310692	4	NYLON PUSH RIVET, 5.1mm DIA, 4.5mm GRIP	
5	8036438	2	POSITIONING KNOB	
6	8036463	1	BLOWER CONTROL SWITCH	
7	7301265	1	AIR CONDITIONING ROCKER SWITCH	
8	8036603	1	TEMPERATURE CONTROL SWITCH	
9	8223043	1	WINDSHIELD WIPER SWITCH	
10	8223044	1	WINDSHIELD WASHER SWITCH	
11	8223040	1	ROOF WIPER/WASHER SWITCH	
12	7301261	1	ELECTRIC HEAT VALVE	
13		Ref	3 POSITION BEZEL SWITCH, (See CAB SECTION for Breakdown)	
14		Ref	REAR WINDOW WIPER ASSY, (See CAB SECTION for Breakdown)	
15		Ref	FRONT WINDSHIELD WIPER ASSY, (See CAB SECTION for Breakdown)	
16		Ref	SKYLIGHT WIPER ASSY, (See CAB SECTION for Breakdown)	
17		Ref	HEATER SYSTEM, (See CAB SECTION for Breakdown)	
18		Ref	AIR CONDITIONING SYSTEM, (See CAB SECTION for Breakdown)	
19		Ref	FUSE/RELAY BOX, (See FUSES, RELAYS AND FLASHER BOX for Breakdown)	
20		Ref	GROUND WIRES, (See OPEN CAB ELECTRICAL COMPONENTS for Breakdown)	

FIGURE 10-12. FUSES, RELAYS AND FLASHER BOX (644E SN 19042 through 20123, SN 0160002514 through 0160034284; 944E SN 19042 through 20123, SN 0160002514 through 0160034278)

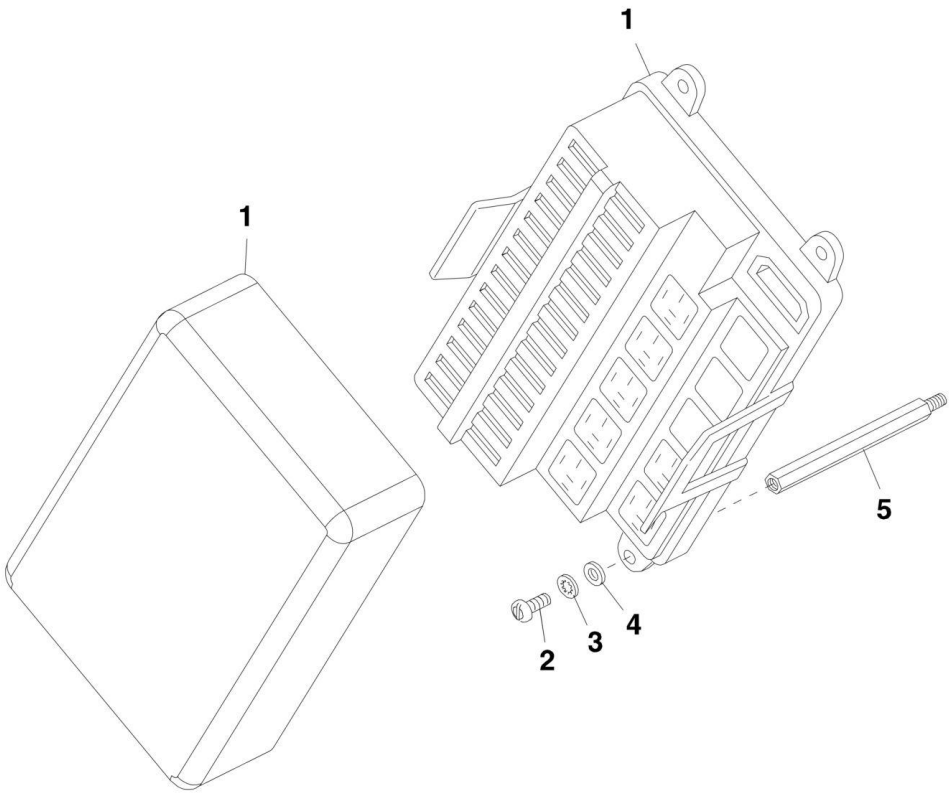

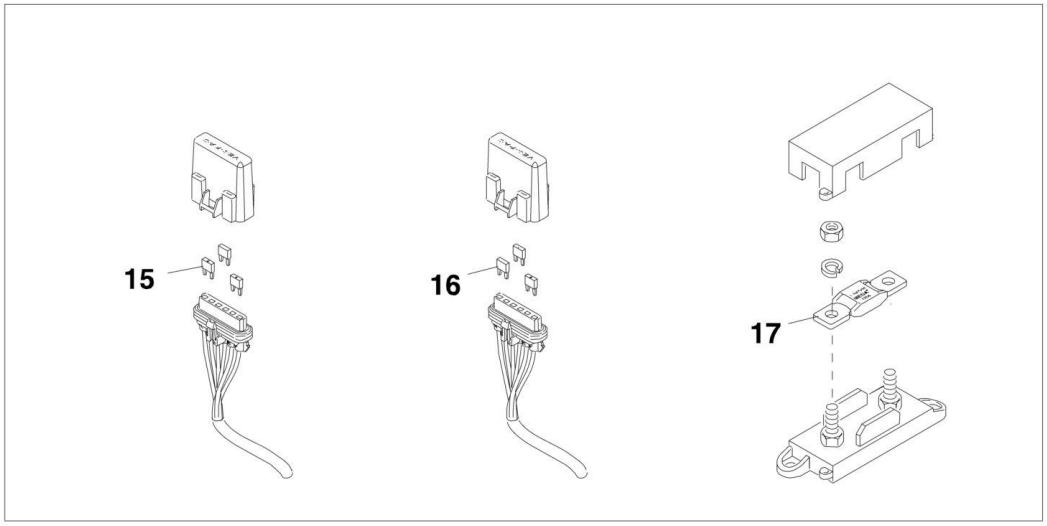

944E ECM POWER HARNESS FIGURE 10-2

PU3191

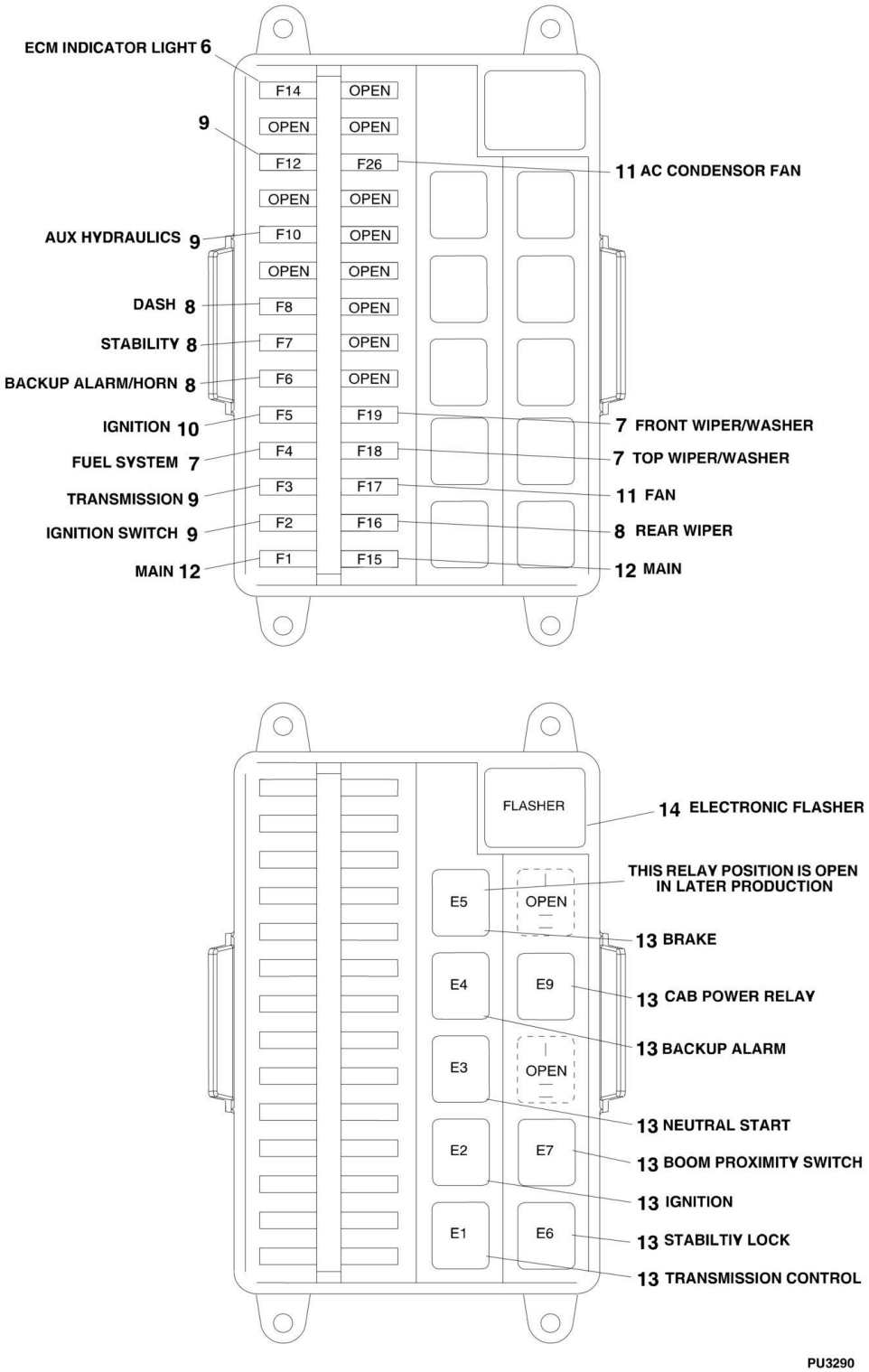
ECM INDICATOR LIGHT 6
9
AUX HYDRAULICS 9
DASH 8
STABILITY 8
BACKUP ALARM/HORN 8
IGNITION 10
FUEL SYSTEM 7
TRANSMISSION 9
IGNITION SWITCH 9
MAIN 12
F14
OPEN
F12
F26
F10
F8
F7
F6
F5
F19
F4
F18
F3
F17
F2
F16
F1
F15
11 AC CONDENSOR FAN
7 FRONT WIPER/WASHER
7 TOP WIPER/WASHER
11 FAN
8 REAR WIPER
12 MAIN
FLASHER
14 ELECTRONIC FLASHER
THIS RELAY POSITION IS OPEN IN LATER PRODUCTION
E5
E4
E9
E3
E2
E7
E1
E6
13 BRAKE
13 CAB POWER RELAY
13 BACKUP ALARM
13 NEUTRAL START
13 BOOM PROXIMITY SWITCH
13 IGNITION
13 STABILTIY LOCK
13 TRANSMISSION CONTROL
PU3290

FIGURE 10-12. FUSES, RELAYS AND FLASHER BOX (644E SN 19042 through 20123, SN 0160002514 through 0160034284; 944E SN 19042 through 20123, SN 0160002514 through 0160034278)

ITEM	PART NUMBER	QTY	DESCRIPTION	REV
1	8220362	1	FUSE/RELAY BOX	
2	8310642	4	SLOTTED PAN HD SCREW, M5-0.8X12mm	
3	8310641	4	LOCKWASHER, 5mm, (internal tooth)	
4	8310390	4	PLAIN WASHER, 5mm	
5	8310640	4	STEEL HEX STANDOFF, 80mm LONG	
6	8229263	1	3 AMP FUSE, (violet), AUTO BLADE TYPE	
7	8229233	3	7.5 AMP FUSE, (brown), AUTO BLADE TYPE	
8	8229234	4	10 AMP FUSE, (red), AUTO BLADE TYPE	
9	8229237	4	15 AMP FUSE, (blue), AUTO BLADE TYPE	
10	8229235	1	20 AMP FUSE, (yellow), AUTO BLADE TYPE	
11	8229262	2	25 AMP FUSE, (clear), AUTO BLADE TYPE	
12	8229238	2	40 AMP FUSE, (orange), AUTO BLADE TYPE	
13	8225119	9	12V SEALED RELAY, (early production)	
14	8270628	1	ELECTRONIC FLASHER, 12V	
15	8229243	3	MINI FUSE, 7.5 AMP	
16	8226234	3	MINI FUSE, 10 AMP	
17	8229259	2	125 AMP FUSE, MEGA BOLT ON	

FIGURE 10-13. FUSES, RELAYS AND FLASHER BOX (644E SN 0160034285 to Present; 944E SN 0160034279 to Present)

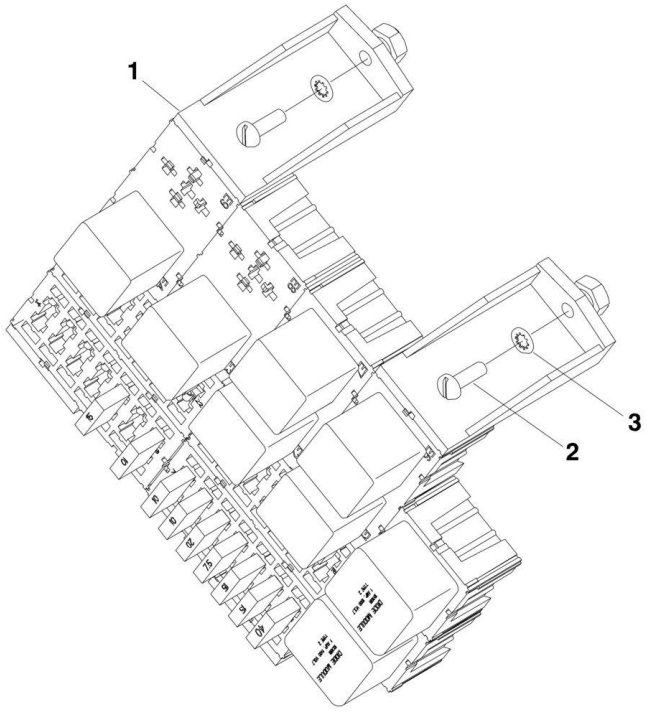

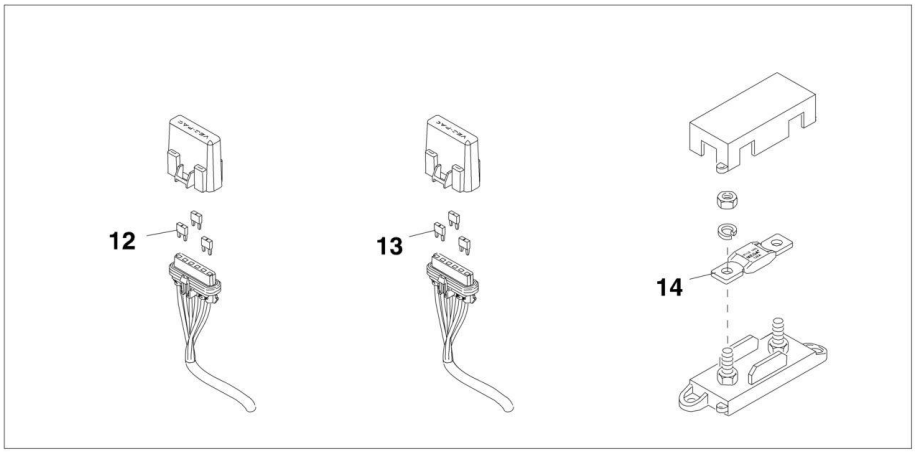

944E ECM POWER HARNESS FIGURE 10-2

PU3192

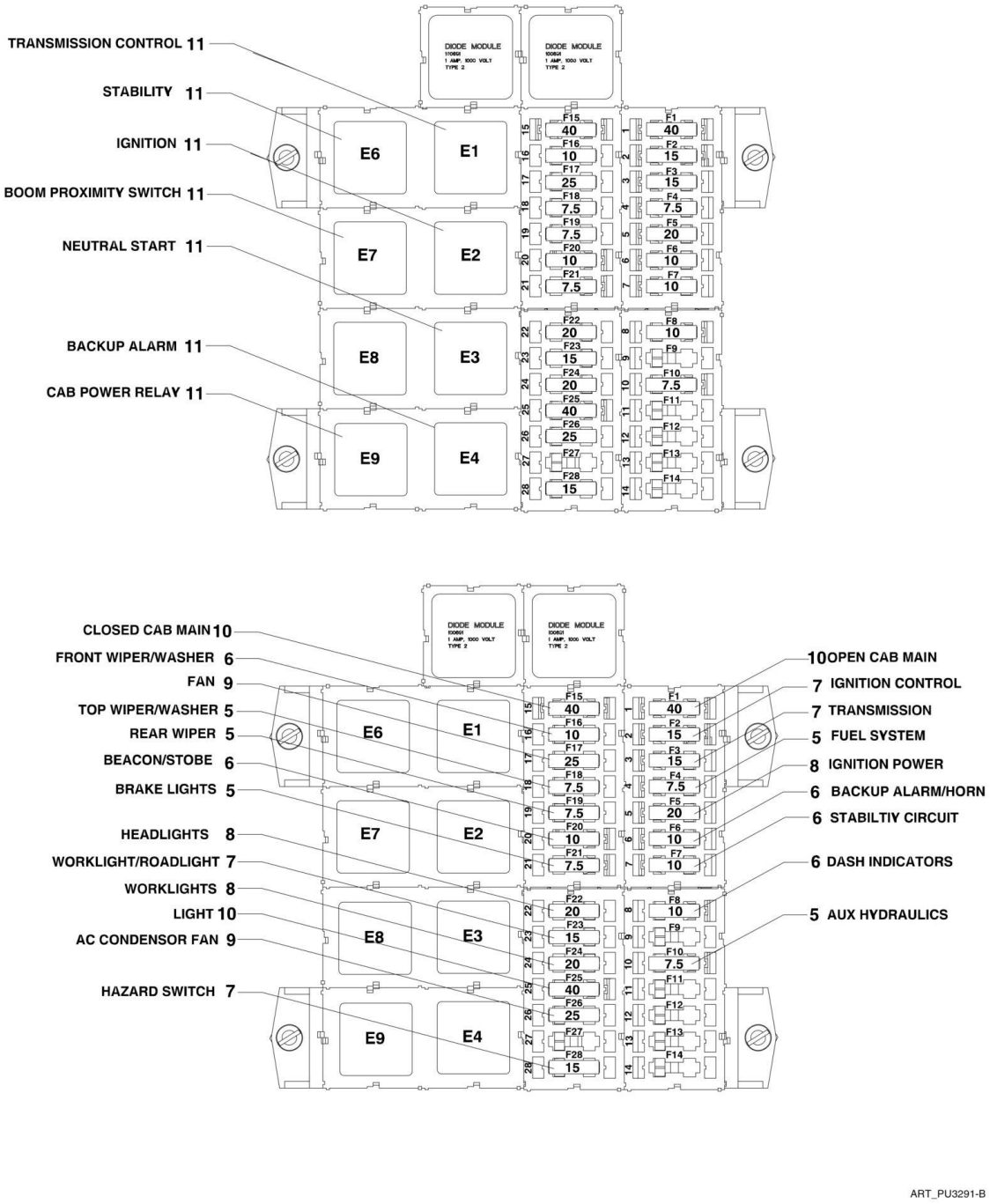
TRANSMISSION CONTROL 11
STABILITY 11
IGNITION 11
BOOM PROXIMITY SWITCH 11
NEUTRAL START 11
BACKUP ALARM 11
CAB POWER RELAY 11
CLOSED CAB MAIN 10
FRONT WIPER/WASHER 6
FAN 9
TOP WIPER/WASHER 5
REAR WIPER 5
BEACON/STOBE 6
BRAKE LIGHTS 5
HEADLIGHTS 8
WORKLIGHT/ROADLIGHT 7
WORKLIGHTS 8
LIGHT 10
AC CONDENSOR FAN 9
HAZARD SWITCH 7
10 OPEN CAB MAIN
7 IGNITION CONTROL
7 TRANSMISSION
5 FUEL SYSTEM
8 IGNITION POWER
6 BACKUP ALARM/HORN
6 STABILTIY CIRCUIT
6 DASH INDICATORS
5 AUX HYDRAULICS
DIODE MODULE
E6
E1
E7
E2
E8
E3
E9
E4
F15 40
F16 10
F17 25
F18 7.5
F19 7.5
F20 10
F21 7.5
F22 20
F23 15
F24 20
F25 40
F26 25
F27
F28 15
F1 40
F2 15
F3 15
F4 7.5
F5 20
F6 10
F7 10
F8 10
F9
F10 7.5
F11
F12
F13
F14

ART_PU3291-B

FIGURE 10-13. FUSES, RELAYS AND FLASHER BOX (644E SN 0160034285 to Present; 944E SN 0160034279 to Present)

ITEM	PART NUMBER	QTY	DESCRIPTION	REV
1	70021815	1	FUSE/RELAY BOX	
2	8303992	4	SLOTTED PAN HD SCREW, M5-0.8X15mm	
3	8310641	4	LOCKWASHER, M5, (internal tooth)	
5	8229233	5	7.5 AMP FUSE, (brown), AUTO BLADE TYPE	
6	8229234	5	10 AMP FUSE, (red), AUTO BLADE TYPE	
7	8229237	4	15 AMP FUSE, (blue), AUTO BLADE TYPE	
8	8229235	3	20 AMP FUSE, (yellow), AUTO BLADE TYPE	
9	8229262	2	25 AMP FUSE, (clear), AUTO BLADE TYPE	
10	8229238	3	40 AMP FUSE, (orange), AUTO BLADE TYPE	
11	8225119	7	12V SEALED RELAY	
12	8229243	3	MINI FUSE, 7.5 AMP	
13	8226234	3	MINI FUSE, 10 AMP	
14	8229259	2	125 AMP FUSE, MEGA BOLT ON	

FIGURE 10-14. SENSOR COMPONENTS

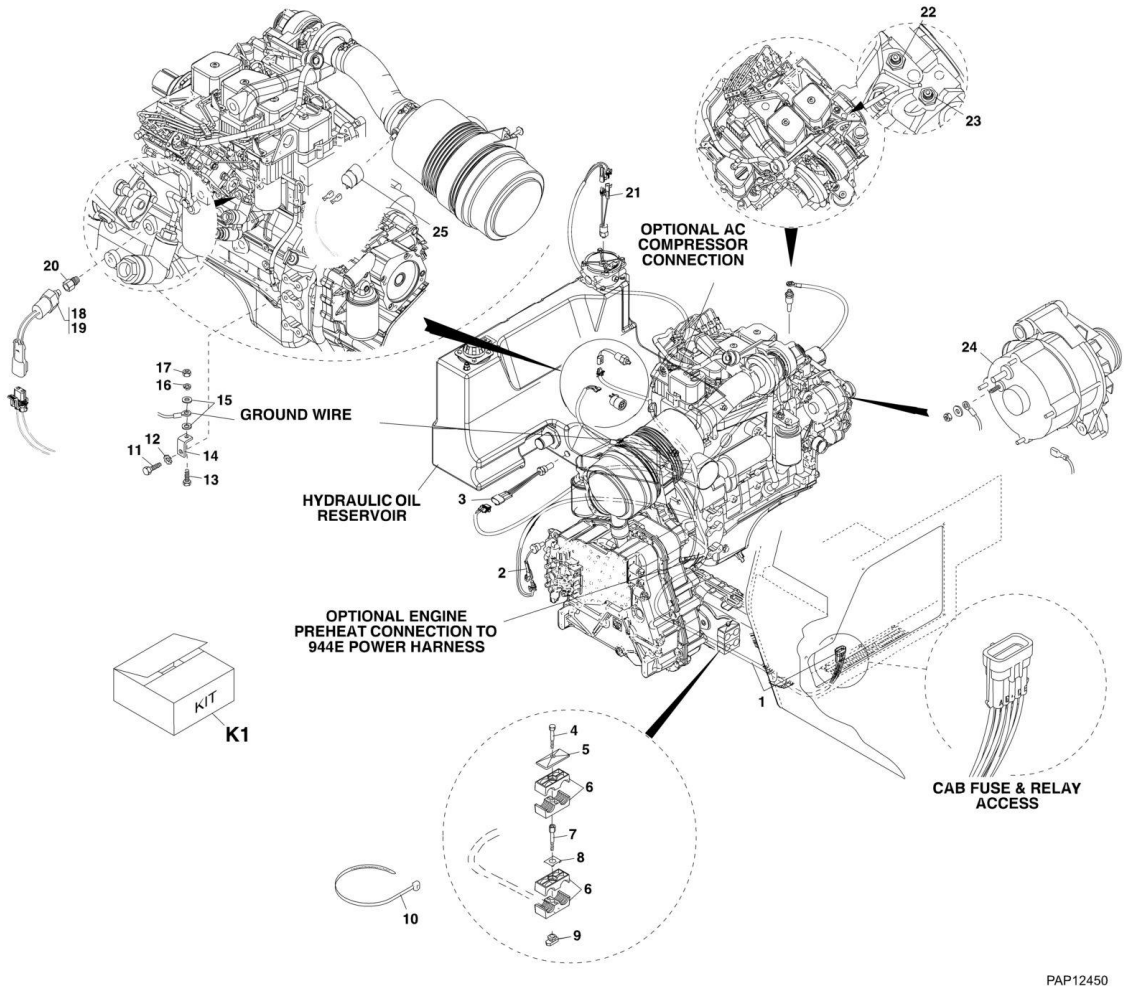

FIGURE 10-14. SENSOR COMPONENTS

ITEM	PART NUMBER	QTY	DESCRIPTION	REV
1	7300338	1	VEHICLE SENSOR HARNESS **(644E SN 17569 through 20123, SN 0160002514 through 0160012687; 944E SN 17569 through 20123, SN 0160002514 through 0160012684)**	I
1	4923266	1	VEHICLE SENSOR HARNESS **(644E SN 0160012410 through 0160043356; 944E SN 0160012745 through 0160014857)**	B
1	4923361	1	VEHICLE SENSOR HARNESS, (944E) **(944E SN 0160014891 through 0160041823)**	A
2	8223232	1	TRANSMISSION TEMPERATURE SWITCH	
3	8223240	1	DUAL HYDRAULIC TEMPERATURE SWITCH	
4	8303528	1	HEX HD CAPSCREW, M8X65, GR8.8 **(644E Prior to SN 0160048717, Excluding 0160045421; 944E Including 0160041827; Excluding)**	
5	8750025	1	TWIN COVER PLATE **(644E Prior to SN 0160048717, Excluding 0160045421; 944E Including 0160041827)**	
6	8750024	2	TWIN CLAMP SET, 1.18 DIA **(644E Prior to SN 0160048717, Excluding 0160045421; 944E Including 0160041827)**	
7	8750039	1	METRIC BOLT STACKING **(644E Prior to SN 0160048717, Excluding 0160045421; 944E Including 0160041827; Excluding)**	
8	8750017	1	LOCKING PLATE **(644E Prior to SN 0160048717, Excluding 0160045421; 944E Including 0160041827)**	
9	8750043	1	RAIL NUT, M8 **(644E Prior to SN 01600408717, Excluding 0160045421; 944E Including 0160041827)**	
10	8584001	AR	TIE WRAP	
11	8303533	1	HEX HD CAPSCREW, M12X20, GR8.8, (torque to 43 Nm) **(644E Prior to SN 0160048717, Excluding 0160045421; 944E Prior to SN 0160041827)**	
12	8310650	1	LOCKWASHER, 12mm, (external tooth) **(644E Prior to SN 0160048717, Excluding 0160045421; 944E Prior to SN 0160041827)**	
13	8303798	1	HEX HD CAPSCREW, M10X25, GR8.8, (torque to 43 Nm) **(944E Prior to SN 0160041827; 644E Excluding 0160045421; SN 644E through 0160048717)**	
14	7301529	1	BUSS BAR, 90, **(644E Prior to SN 0160048717, Excluding 0160045421; 944E Prior to SN 0160041827)**	
15	8307221	2	PLAIN WASHER, 10mm **(644E Prior to SN 0160048717, Excluding 0160045421; 944E Prior to SN 0160041827)**	
16	8307023	1	LOCKWASHER, 10mm **(644E Prior to SN 0160048717, Excluding 0160045421; 944E Prior to SN 0160041827)**	
17	8305038	1	HEX NUT, M10X1.5 **(644E Prior to SN 0160048717, Excluding 0160045421; 944E Prior to SN 0160041827)**	
18	Kit K1	NLA	ENGINE OIL PRESSURE SWITCH, (no longer available, use Kit K1 for service) **(644E SN 17569 through 20123, SN 0160002514 through 0160012687; 944E SN 17569 through 20123, SN 0160002514 through 944E)**	
18	4360609	1	ENGINE OIL PRESSURE SWITCH **(644E SN 0160012410 through 0160048717, Excluding 0160045421; 944E SN 0160012745 through 0160041823)**	
18		Ref	ENGINE OIL PRESSURE SWITCH, (See ENGINE AND ATTACHING PARTS SECTION for Breakdown) **(644E SN 0160048717 to Present, Including 0160045421; 944E SN 0160041827 to Present)**	
19	4923263	1	PRESSURE SWITCH JUMPER **(644E SN 0160012410 to Present; 944E SN 0160012745 through 0160041823)**	
20	77373058	1	ADAPTER **(644E SN 0160012410 to Present; 944E SN 0160012745 through 0160041823)**	
21		Ref	HYDRAULIC OIL FILTER PRESSURE SWITCH, 20 PSI, (See HYDRAULIC COMPONENTS SECTION for Breakdown)	

ITEM	PART NUMBER	QTY	DESCRIPTION	REV
22	8223246	1	ENGINE COOLANT TEMPERATURE SENDER, 644E	
23	8223246	1	ENGINE COOLANT TEMPERATURE SENDER, 944E	
24		Ref	ALTERNATOR, (See ENGINE AND ATTACHING PARTS SECTION for Breakdown) **(944E Prior to SN 0160041827; 644E Excluding 0160045421; SN 644E through 0160048717)**	
24		Ref	ALTERNATOR, (See ENGINE AND ATTACHING PARTS SECTION for Breakdown) **(644E SN 0160048717 to Present, Including 0160045421; 944E SN 0160041827 to Present)**	
25		Ref	VACUUM SWITCH, (See ENGINE AND ATTACHING PARTS SECTION for Breakdown)	
K1	2915053	1	PRESSURE SWITCH KIT, (includes item 18, 19 & 20) **(644E Prior to SN 0160048717, Excluding 0160045421; 944E Prior to SN 0160041827)**	

FIGURE 10-15. CONTROL COMPONENTS

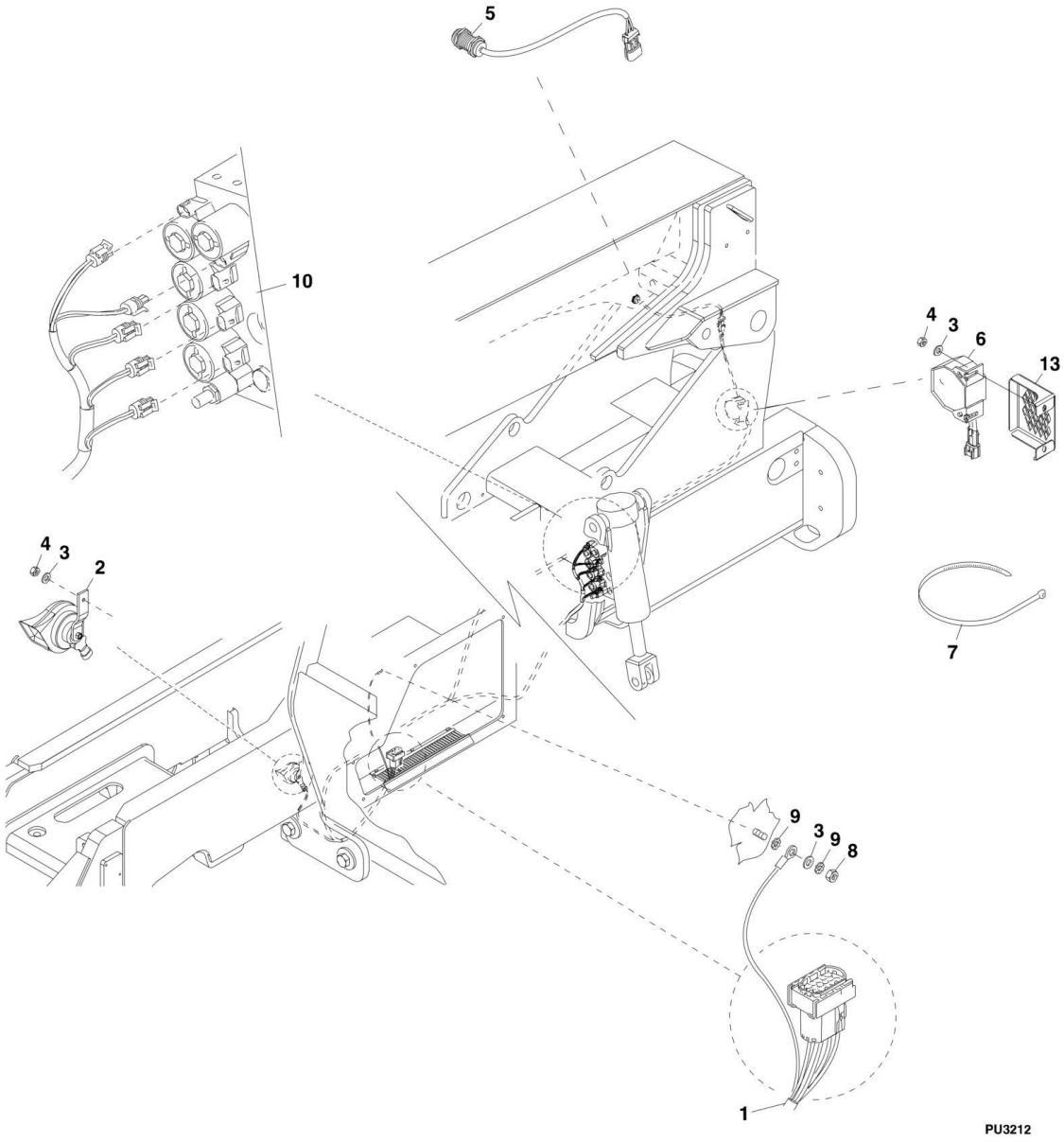

FIGURE 10-15. CONTROL COMPONENTS

ITEM	PART NUMBER	QTY	DESCRIPTION	REV
1	7300340	1	CONTROL HARNESS	
2	10268663	1	HORN ASSY, 12V	
3	8307219	4	WASHER, 6mm, (644E) **(Prior to SN 0160048717, Excluding 0160045421)**	
3	4711400	2	WASHER, 1/4, (644E) **(SN 0160048717 to Present, Including 0160045421)**	
4	8305047	3	HEX NUT, M6X1, (644E) **(Prior to SN 0160048717, Excluding 0160045421)**	
4	3311401	2	HEX NUT, 1/4-20, (644E) **(SN 0160048717 to Present, Including 0160045421)**	
5	1001130308	1	BOOM ANGLE PROXIMITY SWITCH	
6	8270621	1	BACKUP ALARM	
7	8584001	AR	TIE WRAP	
8	8305652	1	HEX LOCKNUT, M6X1	
9	8310687	2	LOCKWASHER, 6mm, (external tooth)	
10		Ref	STABIL-TRAK SOLENOID VALVE, (See HYDRAULIC COMPONENTS SECTION for Breakdown)	
13	1001125470	1	BACKUP ALARM GRILL	

FIGURE 10-16. TRANSMISSION COMPONENTS

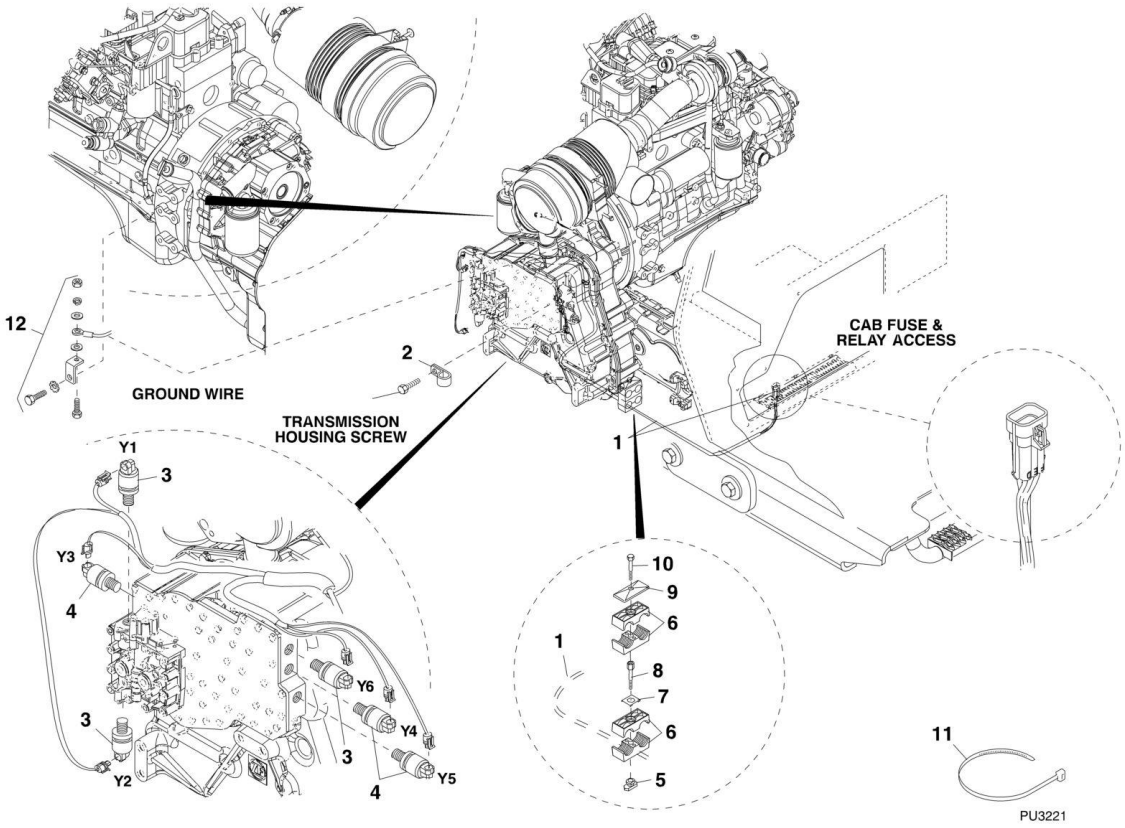

FIGURE 10-16. TRANSMISSION COMPONENTS

ITEM	PART NUMBER	QTY	DESCRIPTION	REV
1		Ref	TRANSMISSION HARNESS, (See TRANSMISSION HARNESS for Breakdown)	
2	8406105	2	TUBE CLIP, 3/4 **(644E Prior to SN 0160048717, Excluding 0160045421; 944E Prior to SN 0160041827)**	
3	8036528	3	SOLENOID VALVE	
4	8036529	3	SOLENOID VALVE	
5	8750043	1	RAIL NUT, M8 **(644E Prior to SN 0160048717, Excluding 0160045421; 944E Prior to SN 0160041827)**	
6	8750024	2	TWIN CLAMP SET, 1.18 DIA **(644E Prior to SN 0160048717, Excluding 0160045421; 944E Prior to SN 0160041827)**	
7	8750017	1	LOCKING PLATE **(644E Prior to SN 0160048717, Excluding 0160045421; 944E Prior to SN 0160041827)**	
8	8750039	1	BOLT STACKING **(644E Prior to SN 0160048717, Excluding 0160045421; 944E Prior to SN 0160041827)**	
9	8750025	1	TWIN COVER PLATE **(644E Prior to SN 0160048717, Excluding 0160045421; 944E Prior to SN 0160041827)**	
10	8303528	1	HEX HD CAPSCREW, M8X65, GR8.8 **(644E Prior to SN 0160048717, Excluding 0160045421; 944E Prior to SN 0160041827)**	
11	8584001	AR	TIE WRAP	
12		Ref	GROUND WIRE HARDWARE, (See SENSOR COMPONENTS for Breakdown)	

FIGURE 10-17. TRANSMISSION HARNESS

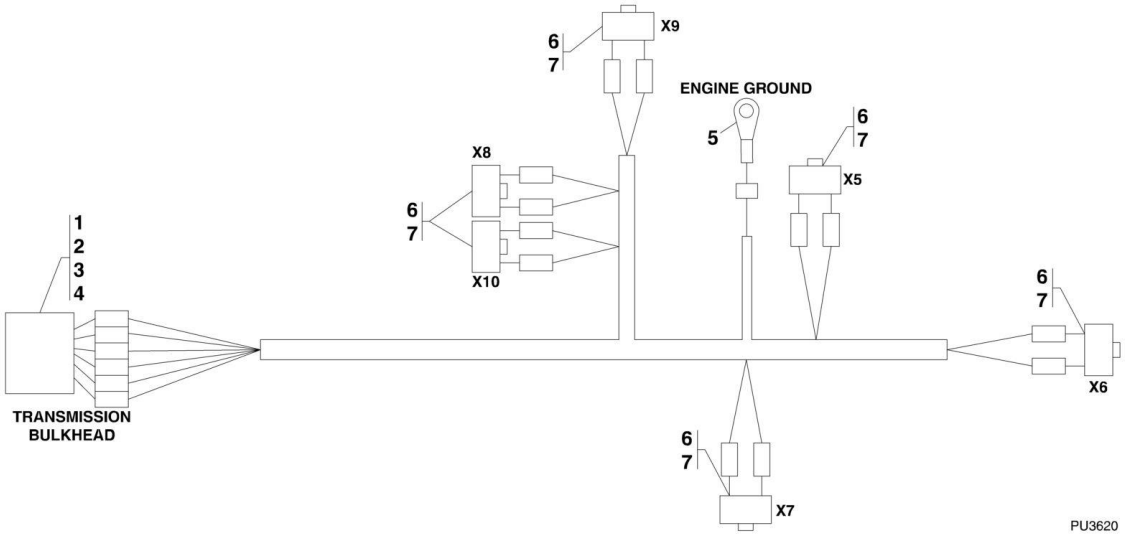

FIGURE 10-17. TRANSMISSION HARNESS

ITEM	PART NUMBER	QTY	DESCRIPTION	REV
	7300337	1	TRANSMISSION HARNESS, (includes all items)	AE
1	8220914	1	CONNECTOR	
2	N.S.S.	1	WEDGE LOCK	
3	8220103	6	TERMINAL	
4	8220158	6	SEAL	
5	8220077	1	TERMINAL RING, 3/8	
6	8220937	6	CONNECTOR	
7	4460842	12	TERMINAL	

FIGURE 10-18. ENGINE HARNESS (644E SN 0160048717 to Present, Including 0160045421; 944E SN 0160041827 to Present)

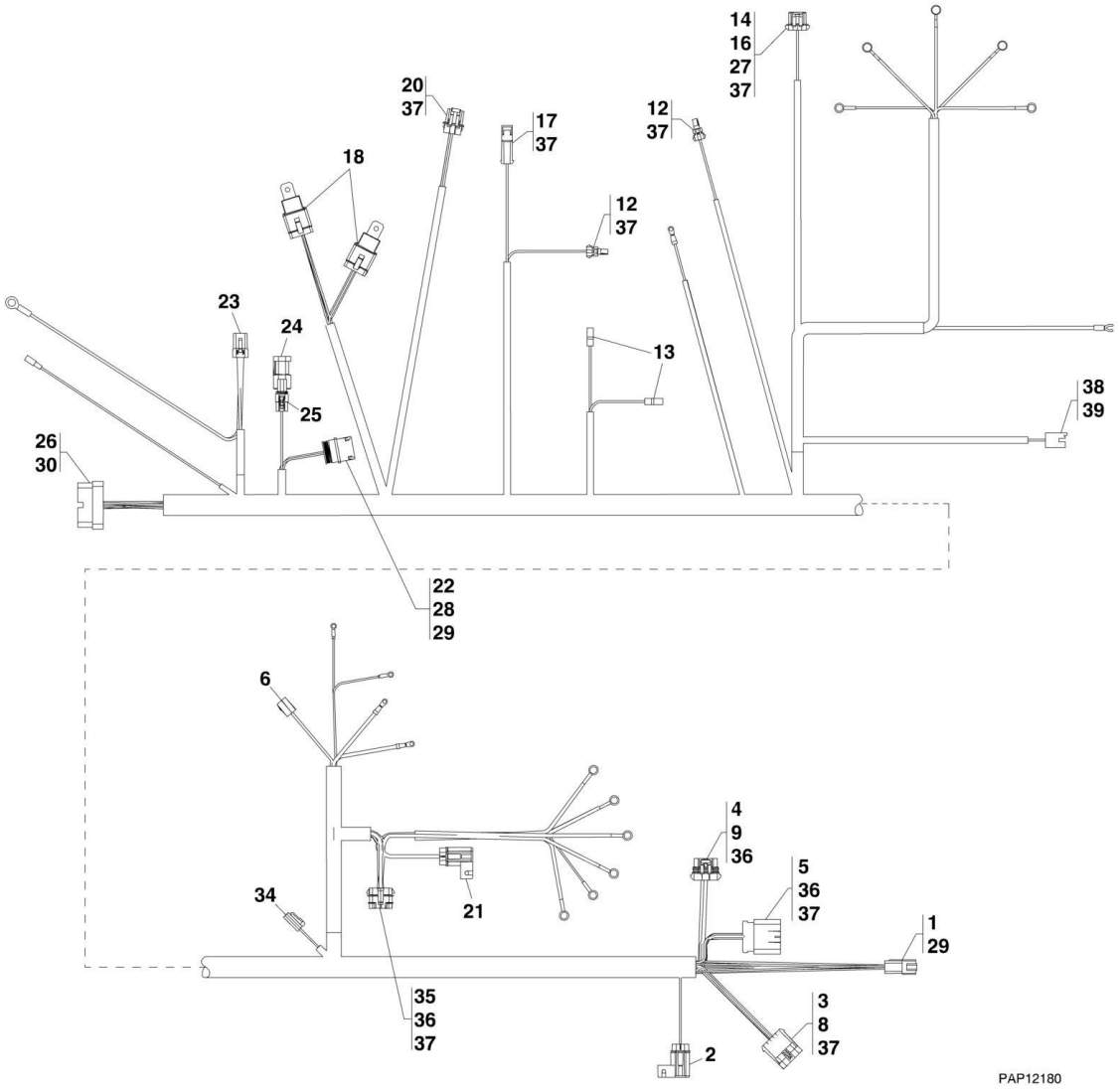

FIGURE 10-18. ENGINE HARNESS (644E SN 0160048717 to Present, Including 0160045421; 944E SN 0160041827 to Present)

ITEM	PART NUMBER	QTY	DESCRIPTION	REV
	1001118887	1	ENGINE HARNESS, (CUMMINS), (includes all items)	E
1	4460970	1	PLUG	
2	1001119411	2	CONNECTOR, (includes fuse)	
3	1001119049	1	CONNECTOR	
4	8220935	1	CONNECTOR, (includes item 9)	
5	8220960	1	CONNECTOR	
6	1001116981	1	CONNECTOR	
8	8220898	1	WEDGE LOCK	
9	8220936	1	WEDGE LOCK	
12	1001119004	2	CONNECTOR, (includes wedge lock)	
14	4460590	1	CONNECTOR	
16	N.S.S.	1	LOCK	
17	1001119106	1	CONNECTOR, (includes wedge lock)	
18	1001117025	2	CONNECTOR, (includes relay)	
20	1001117055	1	CONNECTOR	
20	8220891	1	WEDGE LOCK	
21	1001117070	2	CONNECOR, (includes 30 amp fuse)	
22	1001112612	1	CONNECTOR	
23	1001116810	1	CONNECTOR	
23	70021826	1	WEDGE LOCK	
24	1001116812	1	CONNECTOR	
24	91554019	1	WEDGE LOCK	
25	4461070	1	CONNECTOR, (includes resister)	
26	1001116821	1	CONNECTOR	
27	1001116751	2	CONNECTOR	
28	1001106736	1	CAP	
29	4460466	6	CONNECTOR	
30	4460518	33	PLUG	
34	4460891	1	CONNECTOR	
34	80604018	1	WEDGE LOCK	
35	1001129286	1	DUST CAP	
36	8220089	AR	SEAL	
37	4460458	AR	SEAL	
38	1001136632	1	CONNECTOR	
39	1001136660	2	TERMINAL	

FIGURE 10-19. ECM CAB HARNESS (644E SN 0160048717 to Present, Including 0160045421; 944E SN 0160041827 to Present)

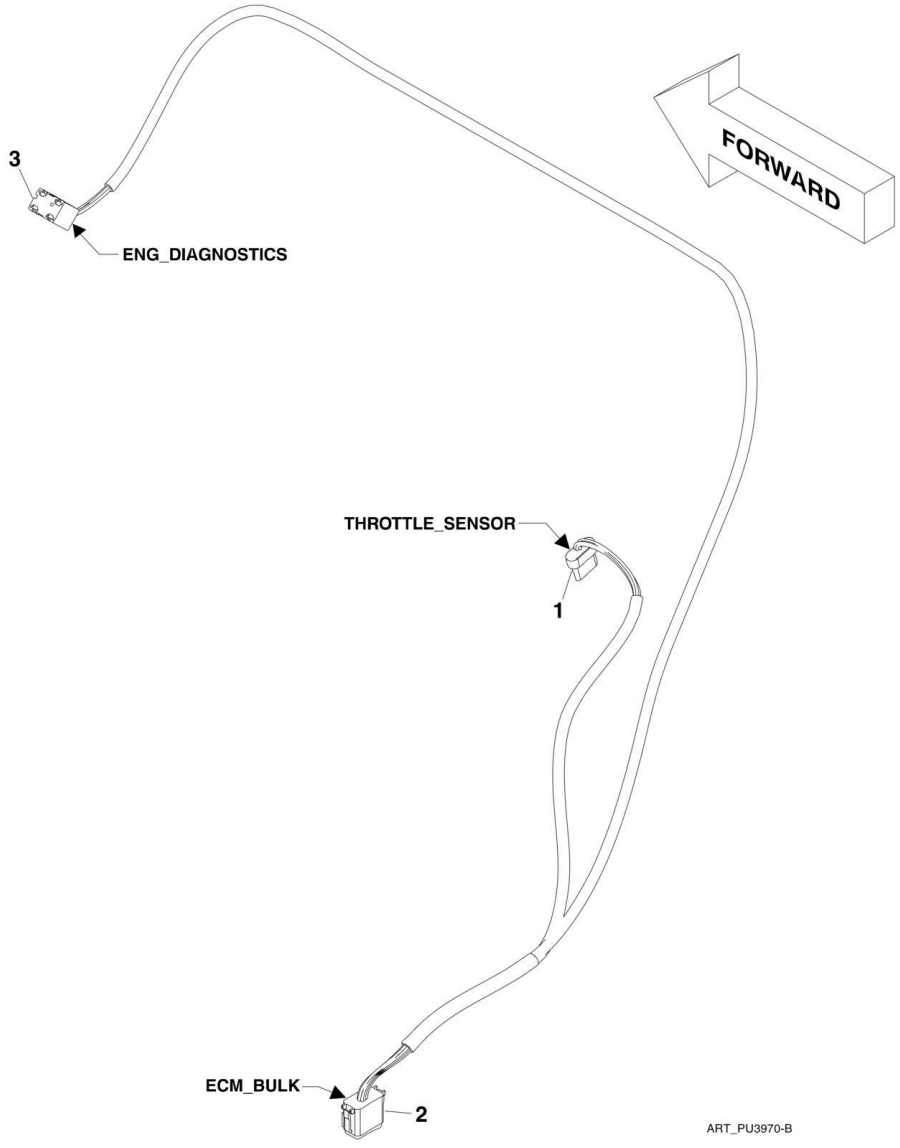

FIGURE 10-19. ECM CAB HARNESS (644E SN 0160048717 to Present, Including 0160045421; 944E SN 0160041827 to Present)

ITEM	PART NUMBER	QTY	DESCRIPTION	REV
	1001118939	1	ECM CAB HARNESS, (CUMMINS), (includes all items)	B
1	1001117064	1	CONNECTOR	
1	91554014	6	TERMINAL	
2	4460933	1	CONNECTOR	
2	4460465	10	TERMINAL	
2	4460466	2	PLUG	
3	1001117119	1	CONNECTOR	
3	4460419	4	TERMINAL	

FIGURE 10-20. FAN RELAY HARNESS

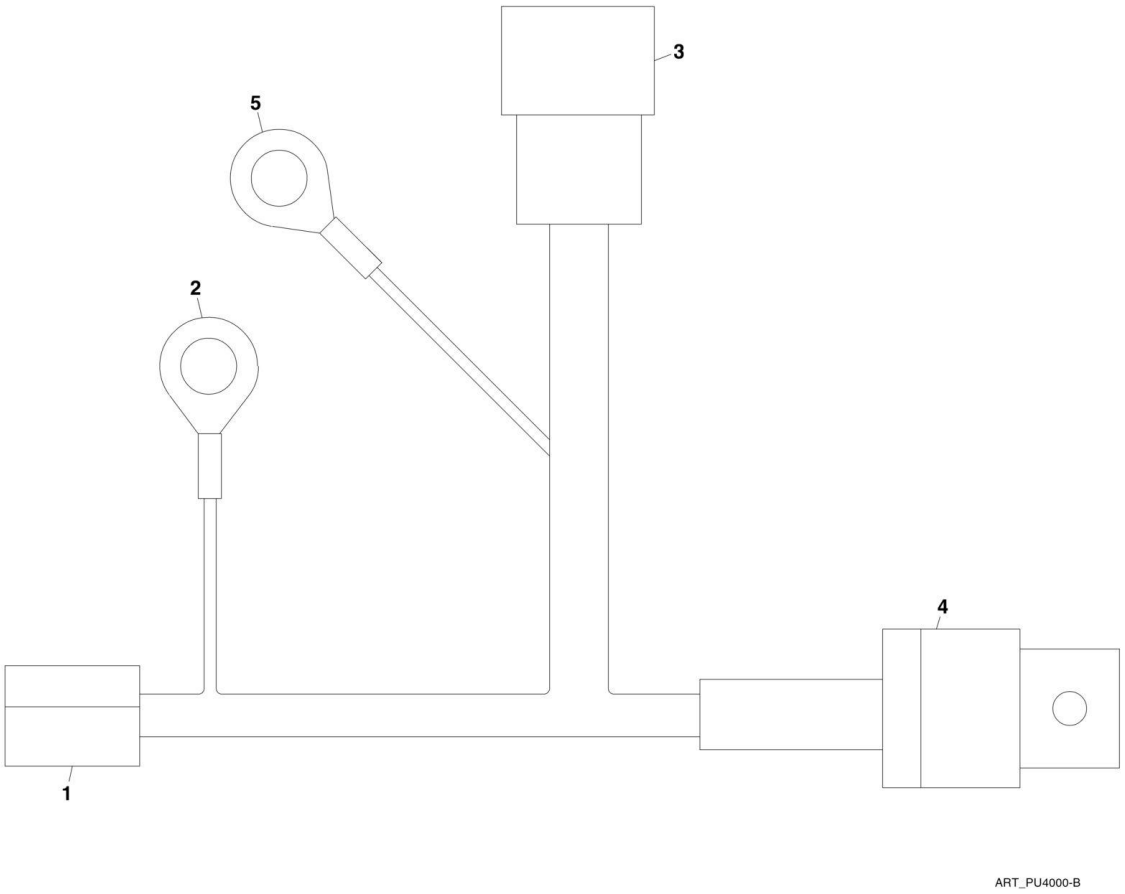

FIGURE 10-20. FAN RELAY HARNESS

ITEM	PART NUMBER	QTY	DESCRIPTION	REV
	1001134490	1	FAN RELAY HARNESS, (if equipped), (includes all items)	D
1	4460994	1	CONNECTOR	
1	1001116723	2	TERMINAL	
1	2400066	1	FUSE, HOLDER	
1	8229247	1	FUSE, 25 AMP	
2	4460019	1	TERMINAL RING	
3	4460897	1	CONNECTOR	
3	80604017	1	WEDGE LOCK	
3	4460464	2	TERMINAL	
4	1001118282	1	CONNECTOR WITH RELAY	
4	1001116734	2	TERMINAL	
4	1001116733	2	TERMINAL	
4	N.S.S.	1	PLUG	
5	4460256	1	TERMINAL RING	

FIGURE 10-21. JUMPER HARNESS

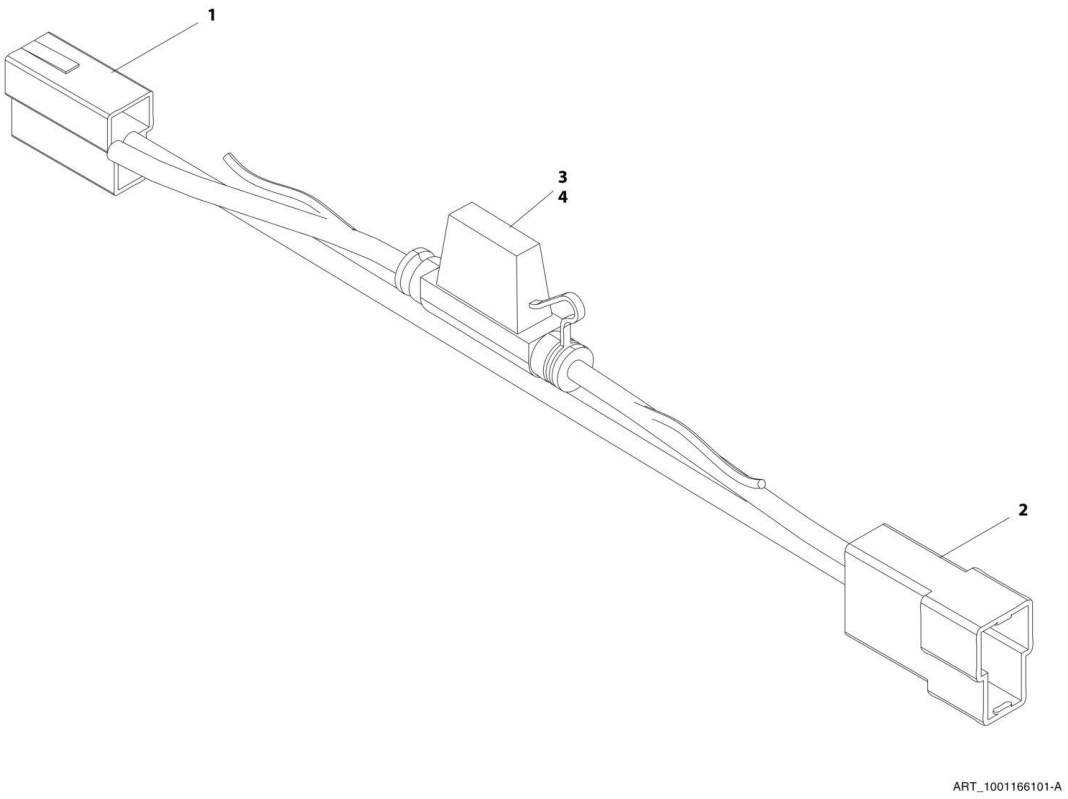

FIGURE 10-21. JUMPER HARNESS

ITEM	PART NUMBER	QTY	DESCRIPTION	REV
	1001166101	Ref	JUMPER HARNESS, (if equipped), (includes all items)	A
1	4460994	1	CONNECTOR	
1	1001116723	2	TERMINAL	
2	1001160152	1	CONNECTOR	
2	1001116701	2	TERMINAL	
3	2400066	1	FUSE HOLDER	
4	8229247	1	FUSE, 25 AMP	

SECTION 11 - DECALS

SECTION 11 - DECALS

FIGURE 11-1. DECALS (644E Prior to SN 0160048717, Excluding 0160045421; 944E Prior to SN 0160041827)

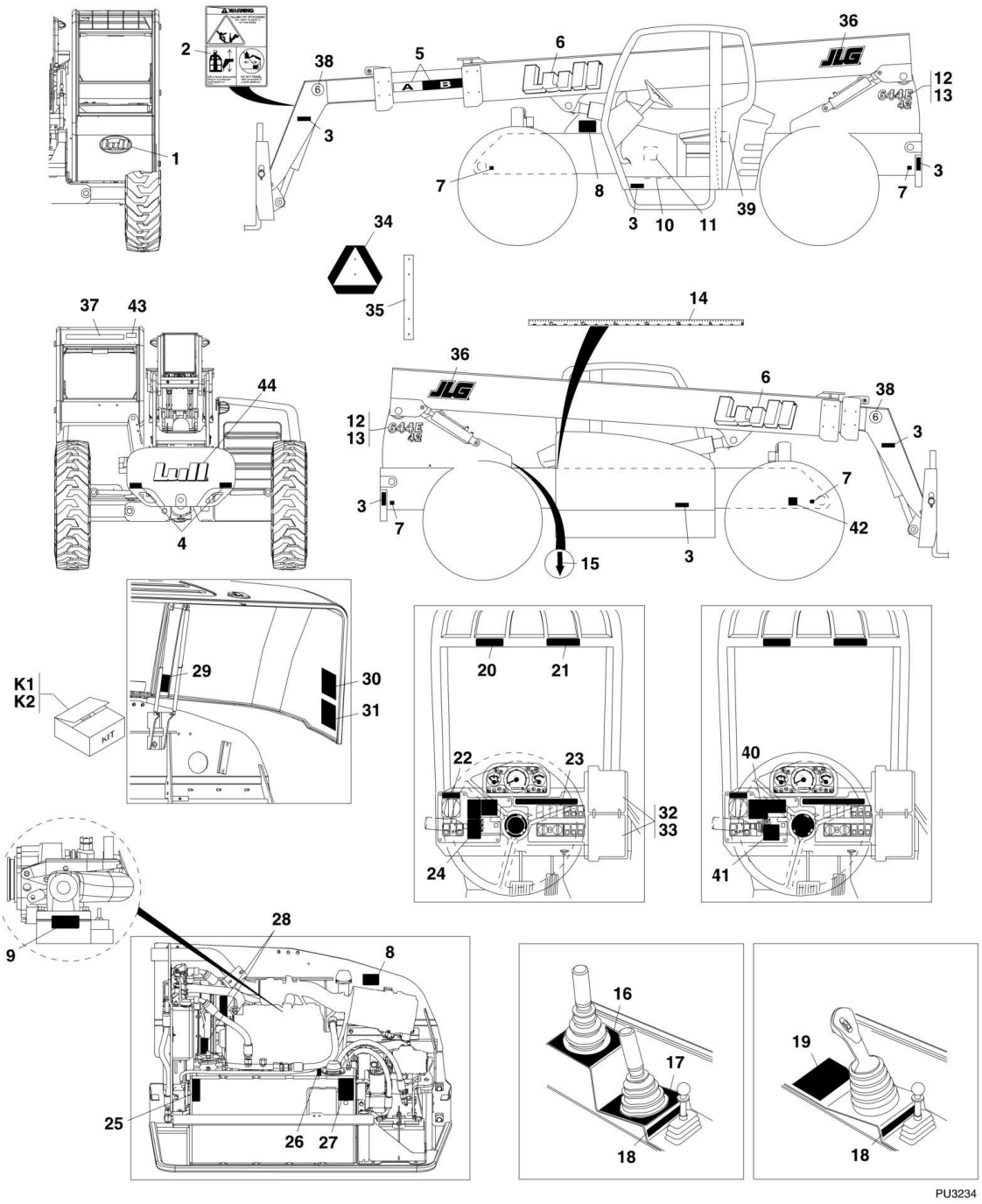

FIGURE 11-1. DECALS (644E Prior to SN 0160048717, Excluding 0160045421; 944E Prior to SN 0160041827)

ITEM	PART NUMBER	QTY	DESCRIPTION	REV
1	4110352	1	LULL DECAL	
2	4110389	1	CARRYING PERSONNEL WARNING DECAL	
3	7301380	6	ORANGE REFLECTIVE TAPE, (4.5X2)	
4	7301379	2	RED REFLECTIVE TAPE, (4.5X2)	
5	4110130	1	BOOM EXTEND STRIPES DECAL, (A-F)	
6	1706103	2	LULL DECAL	
7	4109801	4	TIE DOWN POINT DECAL	
8	1706300	2	ETHER STARTING WARNING DECAL, (engines equipped with cold start)	
9	8270427	1	GRID HEATER WARNING DECAL, (engines equipped with cold start)	
10	4110392	1	HYDRAULIC TEST LOCATIONS DECAL	
11	1705936	1	FUSE BLOCK FUSE LOCATIONS DECAL **(644E SN 17569 through 20123, SN 0160002514 through 0160034284; 944E SN 17569 through 20123, SN 0160002514 through 0160034278)**	
12	1706104	2	DECAL 644E-42	
13	1706105	2	DECAL 944E-42	
14	4110356	1	TRANSFER CARRIAGE EXTENSION TAPE MEASURE DECAL	
15	4110405	1	TRANSFER CARRIAGE INDICATOR POINTER DECAL	
16	4110366	1	FRONT JOYSTICK OVERLAY DECAL, (transfer and attach tilt control)	
17	4110360	1	MIDDLE JOYSTICK OVERLAY DECAL, (boom movement control)	
18	4110367	1	REAR JOYSTICK DECAL, (frame level control)	
19	4110423	1	SINGLE JOYSTICK DECAL	
20	4108991	1	ELECTROCUTION HAZARD DANGER DECAL	
21	4110137	1	TIPOVER HAZARD DANGER DECAL	
22	4110359	1	STEER MODE INDICATOR DECAL	
23	4110361	1	SAFETY INSTRUCTIONS DECAL	
24	4110358	1	WARNING AND DANGER DECAL **(644E SN 17569 through 20115, SN 0160002519 through 0160007267, Excluding 0160006857; 944E SN 18554 through 20123, SN 0160002514 through 0160007270, Excluding 0160005664)**	
25	4108302	1	HYDRAULIC OIL LEVEL DECAL	
26	4100181	1	HYDRAULIC OIL FILL DECAL	
27	1707077	1	BATTERY EXPLOSION WARNING DECAL	
28	4110184	2	MOVING PARTS/ENTANGLEMENT HAZARD WARNING DECAL	
29	4110390	1	HOOD LOCK RELEASE DECAL	
30	4110349	1	LUBRICATION CHART DECAL	
31	4110350	1	MAINTENANCE CHART DECAL	
32	7300628	1	CAPACITY CHART BOOKLET **(Prior to SN 0160037794)**	
32	1001134329	1	CAPACITY CHART BOOKLET **(SN 0160037794 through 0160043356)**	
32	1001110410	1	CAPACITY CHART BOOKLET, (contains capacity charts for 12 ft truss boom with winch, fork mounted lifting hook and grapple bucket), (644E) **(SN 0160037794 through 0160043356)**	
33	7301586	1	CAPACITY CHART BOOKLET, (944E) **(Prior to SN 0160037794)**	
33	1001106011	1	CAPACITY CHART BOOKLET, (944E) **(SN 0160037794 through 0160041823)**	
33	1001110411	1	CAPACITY CHART BOOKLET, (contains capacity charts for 12 ft truss boom with winch, fork mounted lifting hook and grapple bucket), (944E) **(SN 0160037794 through 0160041823)**	
34	7301495	1	SLOW MOVING VEHICLE SIGN	

SECTION 11 - DECALS

ITEM	PART NUMBER	QTY	DESCRIPTION	REV
35	7301383	1	SLOW MOVING VEHICLE BRACKET	
36	1706101	1	JLG DECAL	
37	1705687	1	WEBSITE DECAL	
38	1706170	2	GOOSENECK DECAL	
39	3251813	1	USA DECAL	
40	1705957	1	VEHICLE ROLLAWAY WARNING **(644E SN 0160007291 through 0160043356, Including 0160006857; 944E SN 0160007289 through 0160041823, Including 0160005664)**	
41	1705956	1	DO NOT JUMP WARNING **(644E SN 0160007291 through 0160043356, Including 0160006857; 944E SN 0160007289 through 0160041823, Including 0160005664)**	
42	N.S.S.	1	SN PLATE	
43	91404299	1	ESCAPE DECAL	
44	1706511	1	LULL DECAL **(644E SN 0160017554 through 0160043356; 944E SN 0160017557 through 0160041823)**	
K1	7301384	1	SLOW MOVING VEHICLE KIT, (includes items 38, 39 and appropriate installation hardware)	
K2	2915192	1	DECAL KIT, (includes items 1 thru 31 and items 36 thru 41)	

SECTION 11 - DECALS

FIGURE 11-2. DECALS (644E SN 0160048717 to Present, Including 0160045421; 944E SN 0160041827 to Present)

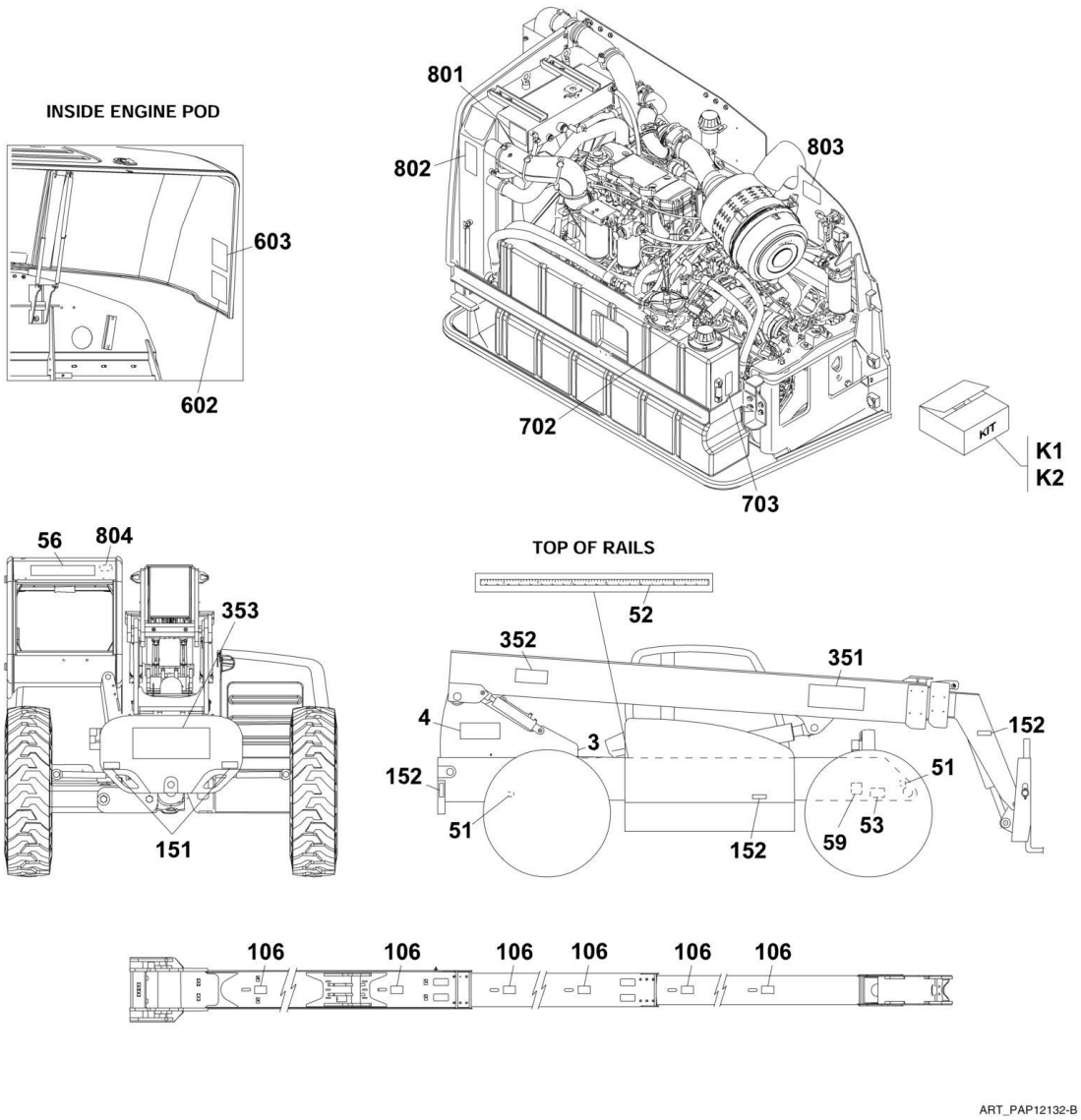

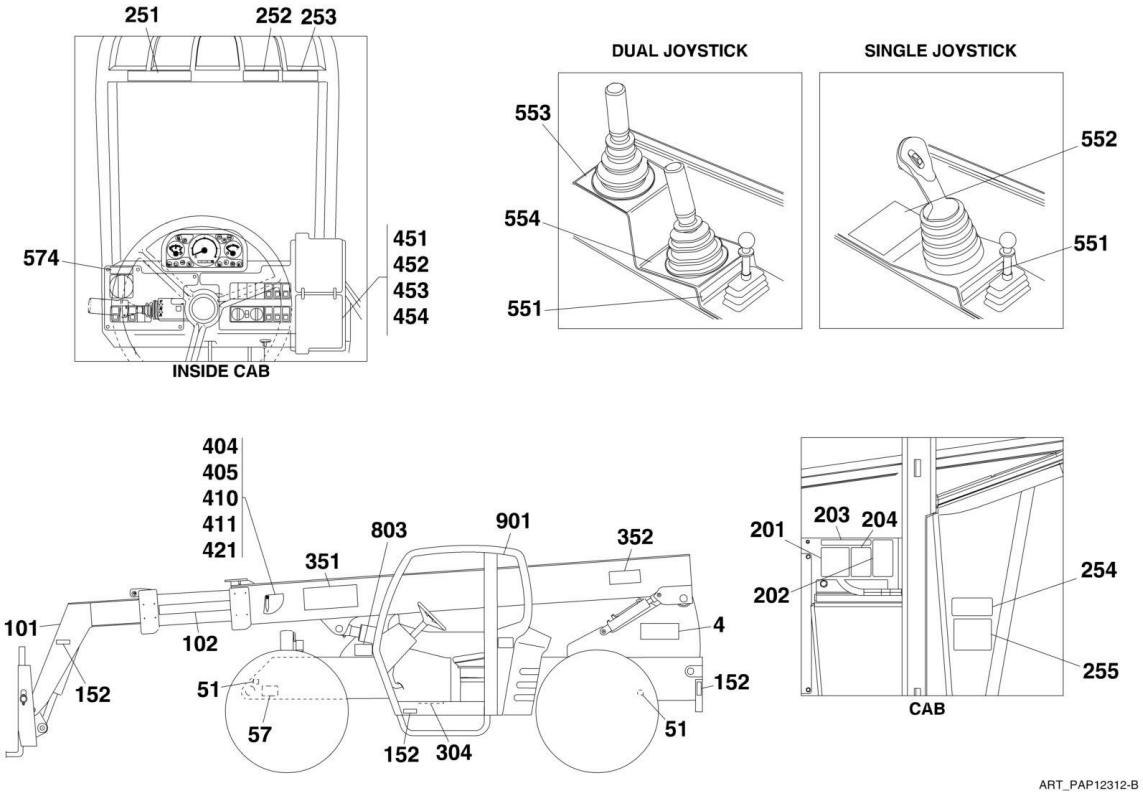
251
252 253
574
451
452
453
454
INSIDE CAB
DUAL JOYSTICK
SINGLE JOYSTICK
553
554
551
552
551
404
405
410
411
421
803
901
352
351
101
102
4
152
51
57
152
304
51
152
201
203 204
202
254
255
CAB
ART_PAP12312-B

SECTION 11 - DECALS

FIGURE 11-2. DECALS (644E SN 0160048717 to Present, Including 0160045421; 944E SN 0160041827 to Present)

ITEM	PART NUMBER	QTY	DESCRIPTION	REV
3	4110405	1	TRANSFER CARRIAGE INDICATOR POINTER DECAL	
4	1706104	2	MODEL DECAL, (644E)	
4	1706105	2	MODEL DECAL, (944E)	
51	4109801	4	TIE DOWN DECAL	
52	4110356	1	TRANSFER CARRIAGE EXTENSION TAPE MEASURE DECAL	
53	N.S.S.	1	SN PLATE	
56	1705687	1	WEBSITE DECAL	
57	1001131271	1	PATENT DECAL	
59	1702631	1	DECAL,BAR CODE	
101	1706298	1	ATTACH FALLING OFF WARNING DECAL	
102	4110130	1	BOOM EXTEND STRIPES DECAL, (A-F)	
106	1706302	6	PINCH POINT DECAL	
151	7301379	2	RED REFLECTIVE TAPE, (4.5X2)	
152	7301380	6	ORANGE REFLECTIVE TAPE, (4.5X2)	
201	1706851	1	DO NOT JUMP WARNING DECAL	
202	1706304	1	RUN OVER WARNING DECAL	
203	1706303	1	READ MANUAL DECAL	
204	1706767	1	MACHINE ROLLOVER WARNING DECAL	
251	1706306	1	TIP OVER WARNING DECAL	
252	1706299	1	ELECTROCUTION HAZARD DECAL	
253	1706850	1	CRUSH WARNING DECAL	
254	1706768	1	NO RIDERS DECAL	
255	N.S.S.	1	SN PLATE	
304	4110392	1	HYDRAULIC TEST LOCATIONS DECAL	
	0274236	Ref	LULL DECAL INSTALLATION, (not available to order, see items 351 thru 353 for service)	D
351	1706103	2	LULL DECAL	
352	1706101	2	JLG DECAL	
353	1706511	1	LULL DECAL	
404	4105262	1	BOOM ANGLE INDICATOR DECAL	
405	1001098769	1	BOOM ANGLE INDICATOR	
410	8305645	1	HEX LOCKNUT, 3/8-16	
411	4711600	1	WASHER, 3/8	
421	1001096404	1	ANGLE INDICATOR SPACER	
451	1001134329	1	CAPACITY CHART, (644E)	B
452	1001106011	1	CAPACITY CHART, (944E)	B
453	1001110410	1	SUPPLEMENTAL CAPACITY CHART, (644E, if equipped)	B
454	1001110411	1	SUPPLEMENTAL CAPACITY CHART, (944E, if equipped)	3
551	4110367	1	FRAME LEVEL DECAL	
552	4110423	1	SINGLE JOYSTICK DECAL, (if equipped with single joystick)	
553	4110366	1	FRONT JOYSTICK OVERLAY DECAL, (transfer and attach tilt control), (if equipped with dual joystick)	
554	4110360	1	MIDDLE JOYSTICK OVERLAY DECAL, (boom movement control), (if equipped with dual joystick)	
574	4110359	1	STEER MODE INDICATOR DECAL	
602	4110349	1	LUBRICATION CHART DECAL	
603	1001103931	1	MAINTENANCE CHART DECAL	
702	1707079	1	HYDRAULIC OIL DECAL	
703	1707114	1	HYDRAULIC OIL LEVEL DECAL	

ITEM	PART NUMBER	QTY	DESCRIPTION	REV
801	1001125892	1	COOLANT FILL DECAL	
802	1706301	1	MOVING PARTS DECAL	
803	1706300	2	ETHER START WARNING DECAL	
804	91404299	1	ESCAPE DECAL	
901	1701640	1	MANUAL DECAL	
K1	1001115208	1	CAB DECALS KIT, (ANSI), (includes items 58, 251 thru 254)	
K2	1001115205	1	RIGHT SIDE DASH DECAL KIT, (includes items 201 thru 204)	

SECTION 12 - OPTIONS

FIGURE 12-1. ROADLIGHT INSTALLATION

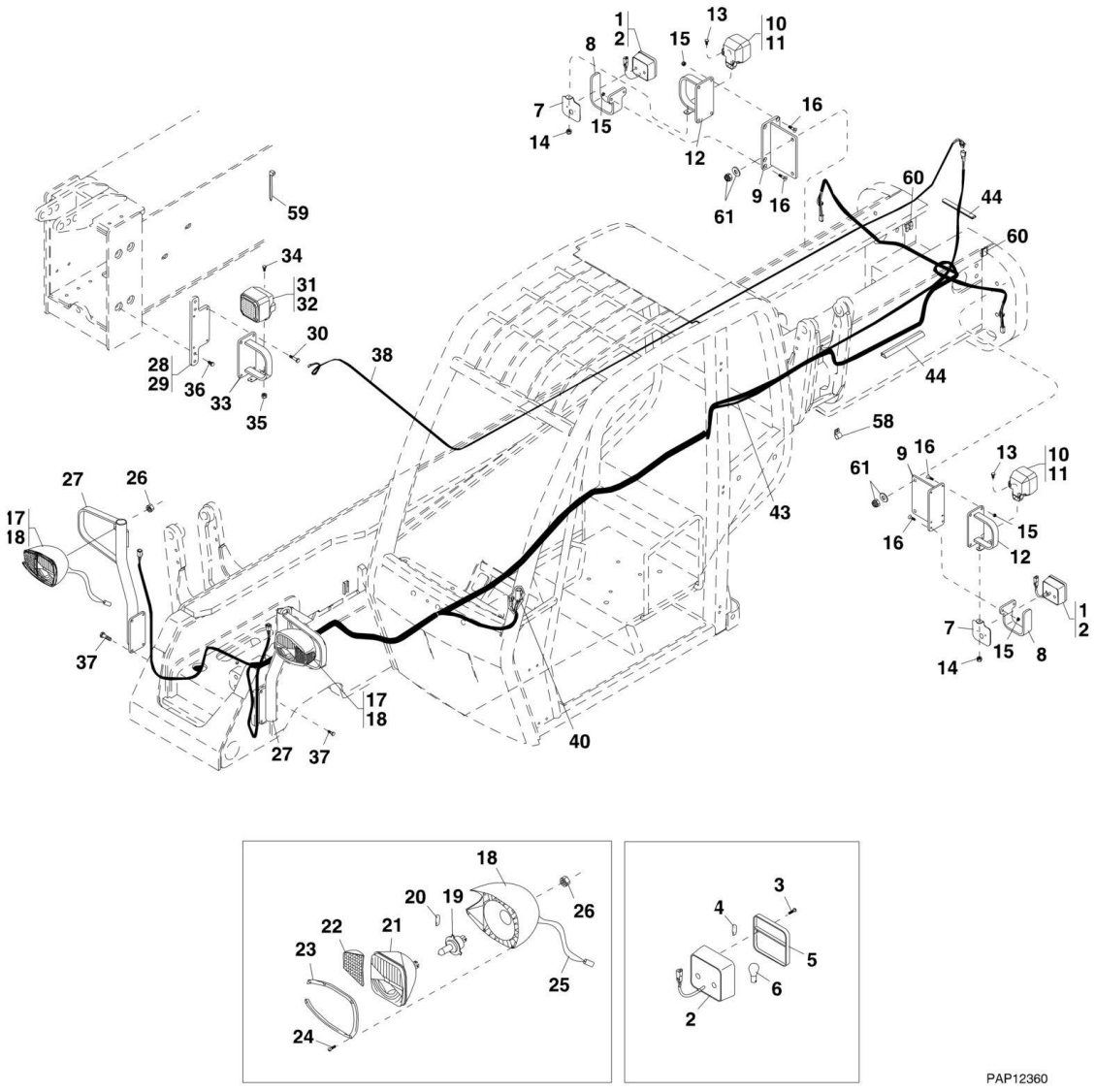

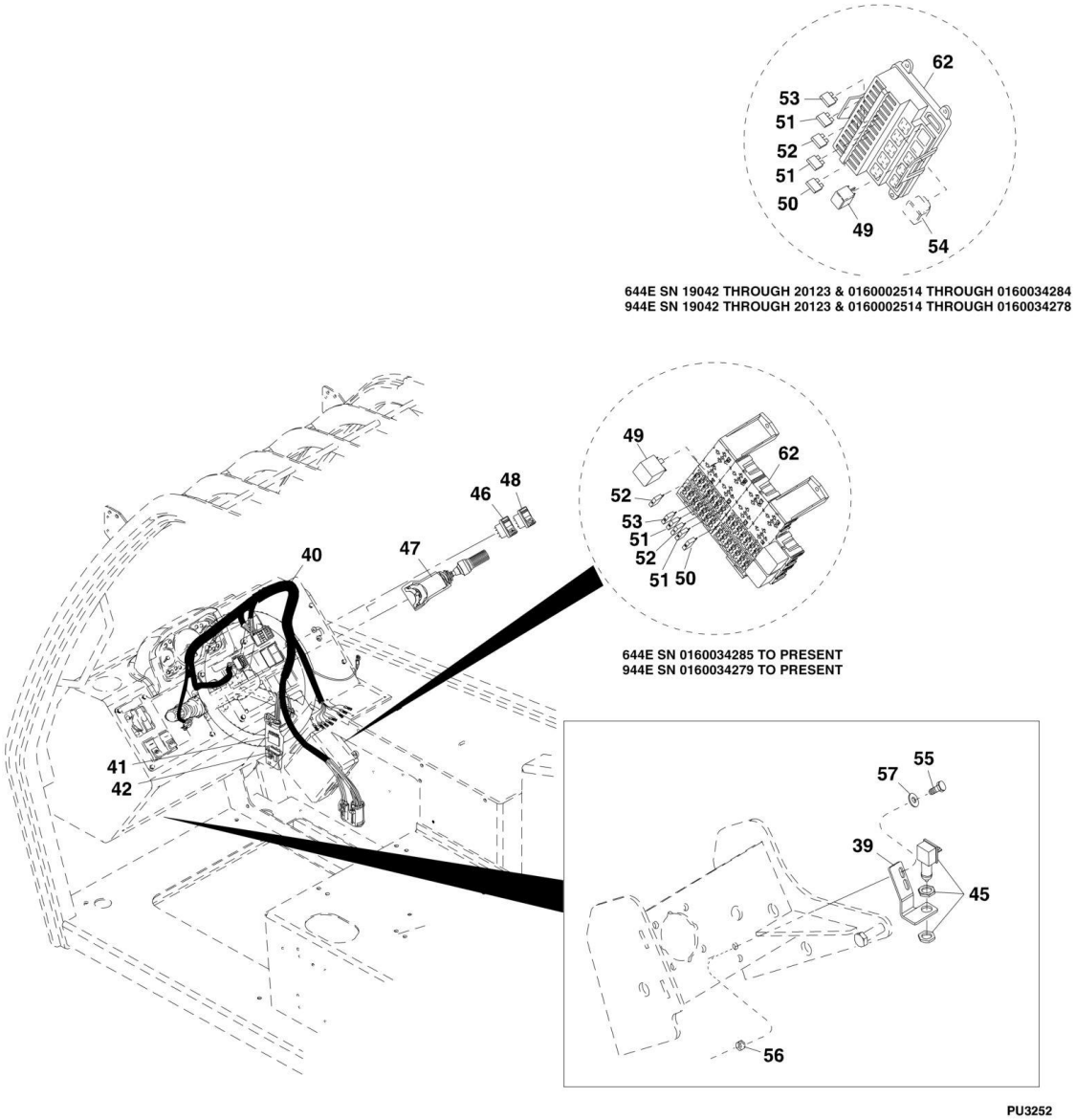
62
53
51
52
51
50
49
54
644E SN 19042 THROUGH 20123 & 0160002514 THROUGH 0160034284
944E SN 19042 THROUGH 20123 & 0160002514 THROUGH 0160034278
49
62
52
53
51
52
51
50
644E SN 0160034285 TO PRESENT
944E SN 0160034279 TO PRESENT
48
46
47
40
41
42
55
57
39
45
56
PU3252

FIGURE 12-1. ROADLIGHT INSTALLATION

ITEM	PART NUMBER	QTY	DESCRIPTION	REV
	7300423	1	ROADLIGHT INSTALLATION, (includes items 1 thru 60)	AA
1	7301225	1	ROADLIGHT ASSY, (left rear), (includes items 2 thru 16)	D
1	7301229	1	ROADLIGHT ASSY, (right rear), (includes items 2 thru 16)	D
2	7150690	2	DIRECTION STOP/TAIL LIGHT, (includes items 3 thru 6)	D
3	N.S.S.	4	TAIL LIGHT LENS SCREW	
4	8036221	1	BLINKER BULB	
5	8036219	1	TAIL LIGHT LENS	
6	8036222	1	TAIL LIGHT BULB AND BRAKE LIGHT	
7	7301230	1	TAIL LIGHT MOUNTING PLATE	
8	7301233	1	TAIL LIGHT GUARD	
9	7301238	1	REAR LIGHT BRACKET	
10	7301345	1	WORKLIGHT ASSY, (left rear), (includes items 11 thru 14)	
10	7301346	1	WORKLIGHT ASSY, (right rear), (includes items 11 thru 14)	
11	7150687	NLA	WORKLAMP, (no longer available, use 1001096314 for replacement), (644E & 944E) **(644E SN 19042 through 20123, SN 0160002514 through 0160030591; 944E SN 19042 through 20123, SN 0160002514 through 0160030592)**	
11	8036218	1	HALOGEN BULB, 12V	
11	8036217	NLA	LENS, (no longer available, use 1001096314 for replacement)	
11	8036216	4	LENS SCREW	
11	1001096314	1	WORKLAMP, (644E & 944E) **(644E SN 0160030593 to Present; 944E SN 01600030594 to Present)**	
11	70021859	1	LENS, (includes lens, reflective unit and gasket)	
11	8036218	1	HALOGEN BULB, 12V	
12	7301341	1	WORKLIGHT BRACKET ASSY	
12	7301324	1	MOUNTING PLATE	
12	7301342	1	WORKLIGHT GUARD	
12	7301343	1	WORKLIGHT MOUNTING BRACKET	
13	8303606	6	HEX HD CAPSCREW, M8X1.25X20MM, PC8.8	
14	8305043	6	NUT, M8X1.25	
15	8305645	6	HEX NUT, 3/8-16	
16	8310341	6	HEX HD CAPSCREW, 3/8-16X1-1/2	
17	7301318	1	ROADLIGHT ASSY INC LIGHT, (right front), (includes items 18 thru 27)	B
17	7301321	1	ROADLIGHT ASSY INC LIGHT, (left front), (includes items 18 thru 27)	B
18	7150703	1	ROADLIGHT, (right front), (includes items 19 thru 26)	AD
18	7150702	1	ROADLIGHT, (left front), (includes items 19 thru 26)	AD
19	8036213	1	HEADLIGHT BULB	
20	8036214	1	BLINKER BULB	
21	8036212	1	HEADLIGHT LENS	
22	8036210	1	AMBER HEADLIGHT LENS, (right front)	
22	8036209	1	AMBER HEADLIGHT LENS, (left front)	
23	N.S.S.	1	HEADLIGHT RING	
24	8036216	6	HEADLIGHT LENS SCREW	
25	8036215	1	WIRING HARNESS, (includes 6-way connector)	
26	N.S.S.	1	NUT, (torque to 7-15 lb-ft)	
27	7301320	1	ROAD LIGHT BRACKET ASSY, (right front)	
27	7301323	1	ROAD LIGHT BRACKET ASSY, (left front)	
27	7301324	1	COMMON LIGHT MOUNTING	
27	7301325	1	ROADLIGHT SUPPORT TUBING	

ITEM	PART NUMBER	QTY	DESCRIPTION	REV
27	7301327	1	ROADLIGHT GUARD	
27	7301328	1	LIGHT MOUNT BRACKET	
28	7301322	1	BOOM WORKLIGHT ASSY, (includes items 29 thru 37)	AA
29	7301319	1	BOOM WORKLIGHT BRACKET	
30	8303784	4	HEX HD CAPSCREW, M10X1.5X20MM, PC8.8	
31	7301346	1	WORKLIGHT ASSY, (right front), (includes items 32 thru 35)	
32	7150687	NLA	WORKLAMP, (no longer available, use 1001096314 for replacement), (644E & 944E) **(644E SN 19042 through 20123, SN 0160002514 through 0160030591; 944E SN 19042 through 20123, SN 0160002514 through 0160030592)**	
32	8036218	1	HALOGEN BULB, 12V	
32	8036217	NLA	LENS, (no longer available, use 1001096314 for replacement)	
32	8036216	4	LENS SCREW	
32	1001096314	1	WORKLAMP, (644E & 944E) **(644E SN 0160030593 to Present; 944E SN 01600030594 to Present)**	
32	70021859	1	LENS, (includes lens, reflective unit and gasket)	
32	8036218	1	HALOGEN BULB, 12V	
33	7301341	1	WORKLIGHT BRACKET ASSY	
33	7301324	1	MOUNTING PLATE	
33	7301342	1	WORKLIGHT GUARD	
33	7301343	1	WORKLIGHT MOUNTING BRACKET	
34	8303606	1	HEX HD CAPSCREW, M8X1.25X20MM, PC8.8	
35	8305043	1	NUT, M8X1.25	
36	8303769	2	HEX HD CAPSCREW, M10X1.5X25MM, PC8.8	
37	8303798	8	HEX HD CAPSCREW, M10X1.5X25MM, PC8.8	
38	7150730	1	BOOM WORKLIGHT CORD	
39	7151322	1	BRAKE LIGHT SWITCH BRACKET	
40	7300347	1	CAB ROADLIGHT HARNESS, (includes items 41 & 42), (644E & 944E) **(644E SN 17569 through 20123, SN 0160002514 through 0160034284; 944E SN 17569 through 20123, SN 0160002514 through 0160034278)**	
40	1001092359	1	CAB ROADLIGHT HARNESS, (includes items 41 & 42), (644E & 944E) **(644E SN 0160034285 to Present; 944E SN 0160034279 to Present)**	
41	8220363	1	3 DIODE CIRCUIT BOARD	
42	8220357	1	CLEAR VES-PAC COVER	
43	7300348	1	VEHICLE ROADLIGHT HARNESS	
44	7301998	2	CONDUIT	
45	8223019	1	MOMENTARY SWITCH	
46	8223060	1	HAZARD SWITCH	
47	8223073	1	TURN SIGNAL CONTROL SELECTOR	
48	8223080	1	WORKLIGHT SWITCH	
49	8225119	1	SEALED RELAY, HIGH INRUSH W/RESISTOR	
50	8229233	1	FUSE, AUTOMOBILE BLADE TYPE, 7.5 AMPS	
51	8229235	2	FUSE, AUTOMOBILE BLADE TYPE, 20 AMPS	
52	8229237	AR	FUSE, AUTOMOBILE BLADE TYPE, 15 AMPS	
53	8229238	1	FUSE, AUTOMOBILE BLADE TYPE, 40 AMPS	
54	8270628	1	ELECTRONIC FLASHER, (644E & 944E) **(644E SN 17569 through 20123, SN 0160002514 through 0160034284; 944E SN 17569 through 20123, SN 0160002514 through 0160034278)**	
55	8303607	2	HEX HD CAPSCREW, M6X1X25MM, PC8.8	
56	8305637	2	HEX LOCKNUT, M6X1	
57	8307219	2	WASHER, M6	
58	8406105	2	CLIP TUBE	

SECTION 12 - OPTIONS

ITEM	PART NUMBER	QTY	DESCRIPTION	REV
59	8584001	12	TIE WRAP	
60	8584018	2	CABLE TIE MOUNT	
61		Ref	BRACKET HARDWARE, (See FRAME AND ATTACHING PARTS SECTION for Breakdown)	
62		Ref	FUSE PANEL, (See ELECTRICAL SECTION for Breakdown)	

FIGURE 12-2. WORKLIGHT INSTALLATION

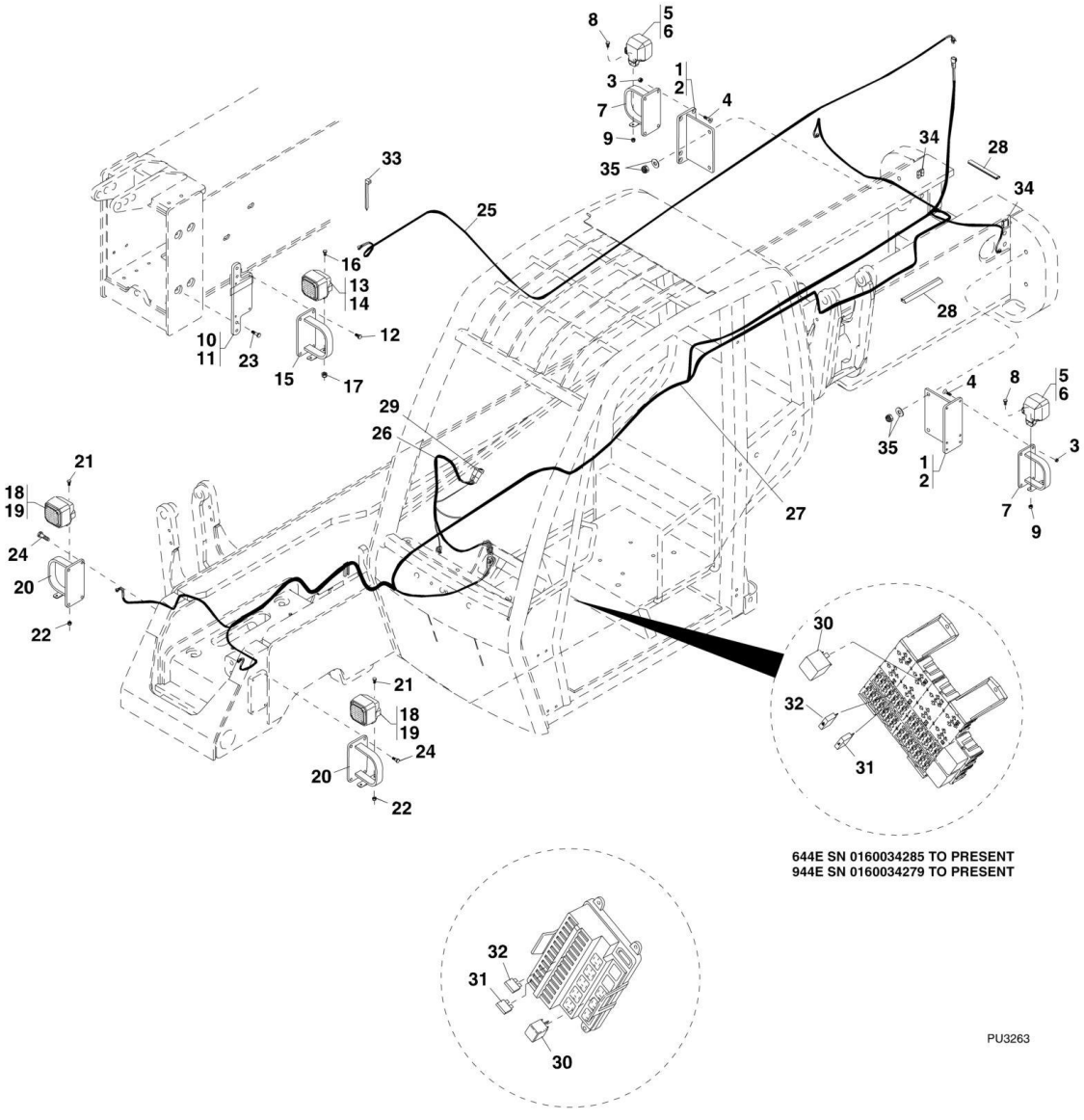

FIGURE 12-2. WORKLIGHT INSTALLATION

ITEM	PART NUMBER	QTY	DESCRIPTION	REV
	7300424	1	WORKLIGHT INSTALLATION, (includes items 1 thru 34)	
1	7301236	1	WORKLIGHT ASSY, (right rear), (includes 2 thru 9)	
1	7301237	1	WORKLIGHT ASSY, (left rear), (includes 2 thru 9)	
2	7301238	1	REAR LIGHT BRACKET	
3	8305645	4	HEX NUT, 3/8-16	
4	8310341	4	HEX HD CAPSCREW, 3/8-16X1-1/2	
5	7301346	1	WORKLIGHT ASSY, (right rear)	
5	7301345	1	WORKLIGHT ASSY, (left rear)	
6	7150687	NLA	WORKLAMP, (no longer available, use 1001096314 for replacement), (644E & 944E) **(644E SN 19042 through 20123, SN 0160002514 through 0160030591; 944E SN 19042 through 20123, SN 0160002514 through 0160030592)**	
6	8036218	1	HALOGEN BULB, 12V	
6	8036217	NLA	LENS, (no longer available, use 1001096314 for replacement)	
6	8036216	4	LENS SCREW	
6	1001096314	1	WORKLAMP, (644E & 944E) **(644E SN 0160030593 to Present; 944E SN 01600030594 to Present)**	
6	70021859	1	LENS, (includes lens, reflective unit and gasket)	
6	8036218	1	HALOGEN BULB, 12V	
7	7301341	1	WORKLIGHT BRACKET ASSY	
7	7301324	1	MOUNTING PLATE	
7	7301342	1	WORKLIGHT GUARD	
7	7301343	1	WORKLIGHT MOUNTING BRACKET	
8	8303606	1	HEX HD CAPSCREW, M8X1.25X20MM, PC8.8	
9	8305043	1	NUT, M8X1.25	
10	7301322	1	BOOM WORKLIGHT ASSY, (includes 11 thru 17)	
11	7301319	1	BOOM WORKLIGHT BRACKET	
12	8303784	4	HEX HD CAPSCREW, M10X1.5X20MM, PC8.8	
13	7301346	1	WORKLIGHT ASSY, (right front)	
14	7150687	NLA	WORKLAMP, (no longer available, use 1001096314 for replacement), (644E & 944E) **(644E SN 19042 through 20123, SN 0160002514 through 0160030591; 944E SN 19042 through 20123, SN 0160002514 through 0160030592)**	
14	8036218	1	HALOGEN BULB, 12V	
14	8036217	NLA	LENS, (no longer available, use 1001096314 for replacement)	
14	8036216	4	LENS SCREW	
14	1001096314	1	WORKLAMP, (644E & 944E) **(644E SN 0160030593 to Present; 944E SN 01600030594 to Present)**	
14	70021859	1	LENS, (includes lens, reflective unit and gasket)	
14	8036218	1	HALOGEN BULB, 12V	
15	7301341	1	WORKLIGHT BRACKET ASSY	
15	7301324	1	MOUNTING PLATE	
15	7301342	1	WORKLIGHT GUARD	
15	7301343	1	WORKLIGHT MOUNTING BRACKET	
16	8303606	1	HEX HD CAPSCREW, M8X1.25X20MM, PC8.8	
17	8305043	1	NUT, M8X1.25	
18	7301345	1	WORKLIGHT ASSY, (left front), (includes 19 thru 22)	
18	7301346	1	WORKLIGHT ASSY, (right front), (includes 19 thru 22)	
19	7150687	NLA	WORKLAMP, (no longer available, use 1001096314 for replacement), (644E & 944E) **(644E SN 19042 through 20123, SN 0160002514 through 0160030591; 944E SN 19042 through 20123, SN 0160002514 through 0160030592)**	

SECTION 12 - OPTIONS

ITEM	PART NUMBER	QTY	DESCRIPTION	REV
19	8036218	1	HALOGEN BULB, 12V	
19	8036217	NLA	LENS, (no longer available, use 1001096314 for replacement)	
19	8036216	4	LENS SCREW	
19	1001096314	1	WORKLAMP, (644E & 944E) **(644E SN 0160030593 to Present; 944E SN 01600030594 to Present)**	
19	70021859	1	LENS, (includes lens, reflective unit and gasket)	
19	8036218	1	HALOGEN BULB, 12V	
20	7301341	1	WORKLIGHT BRACKET ASSY	
20	7301324	1	MOUNTING PLATE	
20	7301342	1	WORKLIGHT GUARD	
20	7301343	1	WORKLIGHT MOUNTING BRACKET	
21	8303606	1	HEX HD CAPSCREW, M8X1.25X20MM, PC8.8	
22	8305043	1	NUT, M8X1.25	
23	8303769	2	HEX HD CAPSCREW, M10X1.5X45MM, PC8.8	
24	8303798	8	HEX HD CAPSCREW, M10X1.5X25MM, PC8.8	
25	7150730	1	BOOM WORKLIGHT HARNESS	
26	7300349	1	CAB WORKLIGHT HARNESS	
27	7300350	1	VEHICLE WORKLIGHT HARNESS	
28	7301998	2	SPLIT CONDUIT	
29	8223080	1	WORKLIGHT SWITCH	
30	8225119	1	SEALED RELAY, HIGH INRUSH W/RESISTOR	
31	8229236	1	FUSE, AUTOMOBILE BLADE TYPE, 30 AMPS	
32	8229238	1	FUSE, AUTOMOBILE BLADE TYPE, 40 AMPS	
33	8584001	12	TIE WRAP	
34	8584018	2	CABLE TIE MOUNT	
35		Ref	BRACKET HARDWARE, (See FRAME AND ATTACHING PARTS SECTION for Breakdown)	

FIGURE 12-3. BEACON AND STROBE LIGHT

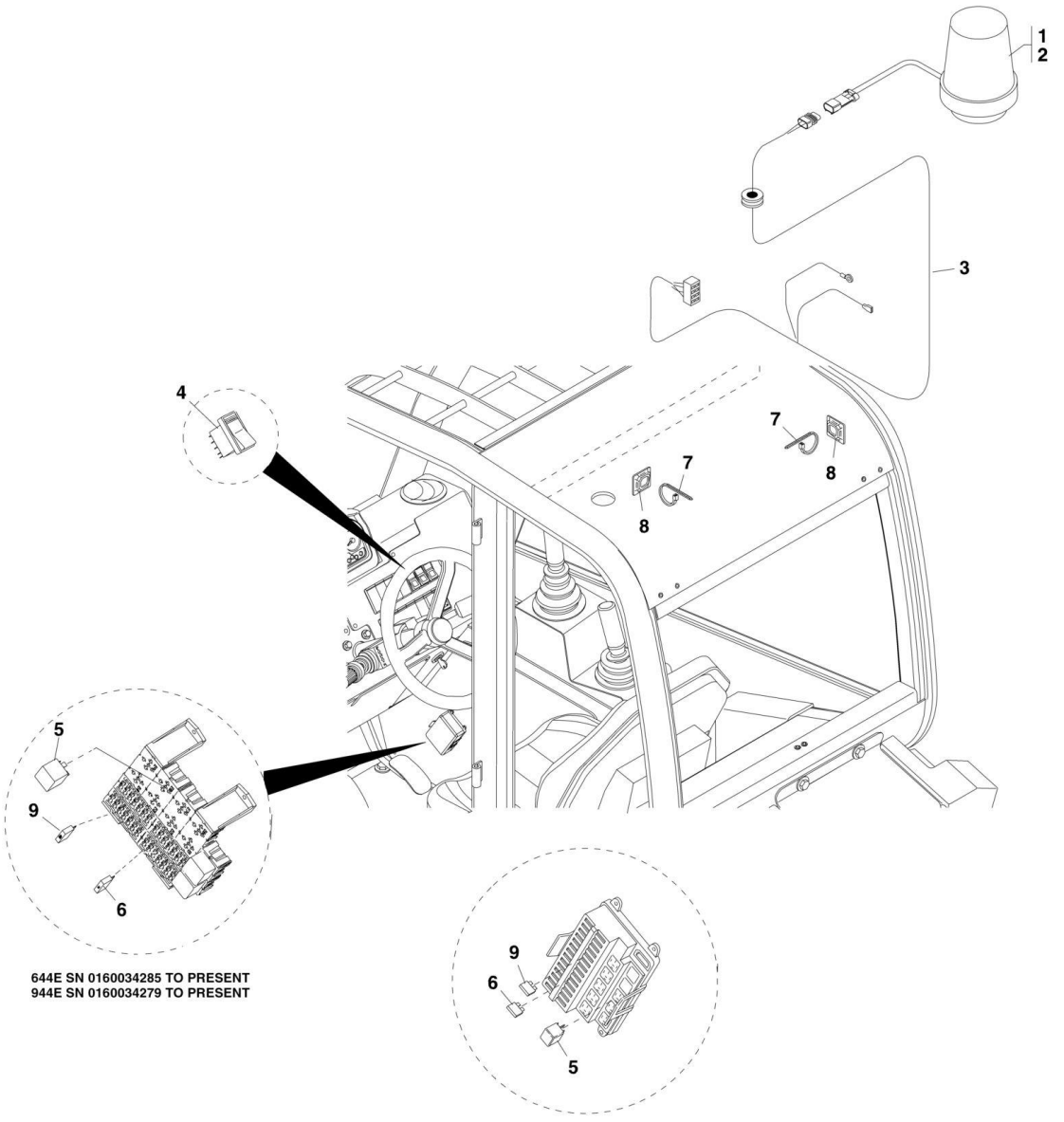

FIGURE 12-3. BEACON AND STROBE LIGHT

ITEM	PART NUMBER	QTY	DESCRIPTION	REV
1	8500066	1	ROTATING BEACON LIGHT	
2	8500061	1	STROBE BEACON LIGHT	
2	7016603	1	BULB	
3	7300351	1	BEACON/STROBE LIGHT HARNESS, (644E & 944E) **(644E SN 17569 through 20123, SN 0160002514 through 0160034284; 944E SN 17569 through 20123, SN 0160002514 through 0160034278)**	
3	1001092358	1	BEACON/STROBE LIGHT HARNESS, (644E & 944E) **(644E SN 0160034285 to Present; 944E SN 0160034279 to Present)**	
4	8223038	1	BEACON SWITCH	
5	8225119	1	HIGH INRUSH W/RESISTOR RELAY SEALED	
6	8229234	1	10 AMP FUSE	
7	8584001	12	TIE WRAP	
8	8584018	7	TIE WRAP MOUNT	
9	8229238	1	40 AMP FUSE	

FIGURE 12-4. SWING CARRIAGE CYLINDER ASSEMBLY ROSENBOOM

NOTE: CHECK CYLINDER FOR PART NUMBER & MANUFACTURER PRIOR TO ORDERING REPLACEMENT PARTS

ROSENBOOM

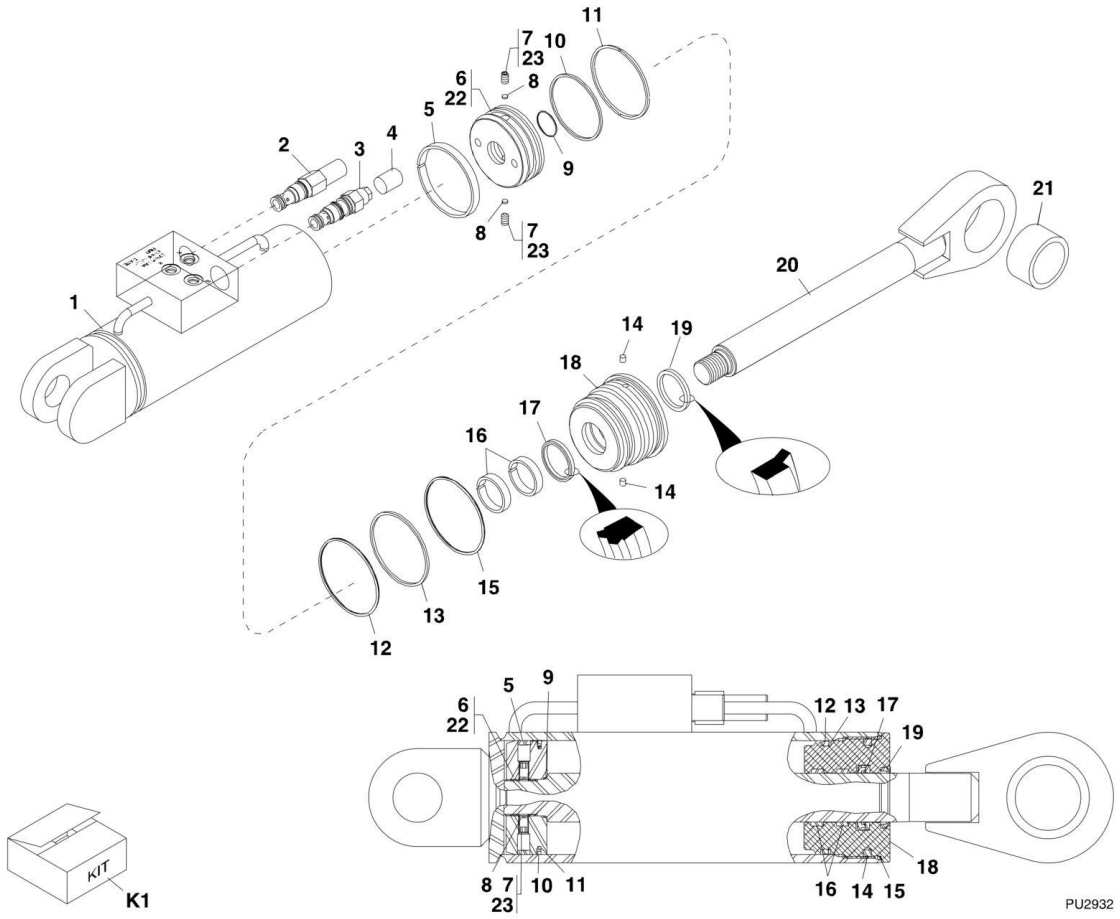

FIGURE 12-4. SWING CARRIAGE CYLINDER ASSEMBLY ROSENBOOM

ITEM	PART NUMBER	QTY	DESCRIPTION	REV
	2716153	NLA	SWING CARRIAGE CYLINDER, (no longer available, use 2717200 for replacement), (includes items 1 thru 21)	A
	1684436	NLA	SWING CARRIAGE CYLINDER, (no longer available, use 2717200 for replacement), (includes items 1 thru 21)	B
	2717200	1	SWING CARRIAGE CYLINDER, (includes items 1 thru 21)	C, F
1	8035864	1	WELDMENT TUBE	
2	70020428	1	RELIEF VALVE CARTRIDGE, (torque to 30-35 lb-ft)	
2	7024574	1	SEAL KIT	
3	8033786	1	COUNTERBALANCE VALVE, (torque to 30-35 lb-ft)	
3	8025655	1	SEAL KIT	
4	70021812	1	CAP	
5	Kit K1	1	PRECISION WEARBAND	
6	8035863	1	PISTON, (loctite and torque to 440-500 lb-ft)	
7	8035536	2	SET SCREW, 5/16-18X1/2, (Loctite and torque to 85-95 lb-in)	
8	Kit K1	2	LOCKING INSERT	
9	Kit K1	1	O-RING	
10	Kit K1	1	SQUARE RING	
11	Kit K1	1	SQUARE SECTION TFE PISTON SEAL	
12	Kit K1	1	O-RING	
13	Kit K1	1	BACK-UP RING	
14	Kit K1	2	LOCKING INSERT	
15	Kit K1	1	O-RING	
16	Kit K1	2	PRECISION WEARBAND	
17	Kit K1	1	DEEP Z-SEAL	
18	8035862	1	HEAD GLAND, (torque to 250-300 lb-ft)	
19	Kit K1	1	WIPER SEAL	
20	8035861	1	WELDMENT ROD	
21	70022046	1	DURALON JOURNAL BEARING	
22	8526011	AR	LOCTITE 271, (apply to item 6)	
23	8526036	AR	LOCTITE 242, (apply to item 7)	
K1	8035830	1	SEAL KIT, (includes items 5, 8 thru 17 & 19)	

FIGURE 12-5. SWING CARRIAGE CYLINDER ASSEMBLY ENERGY

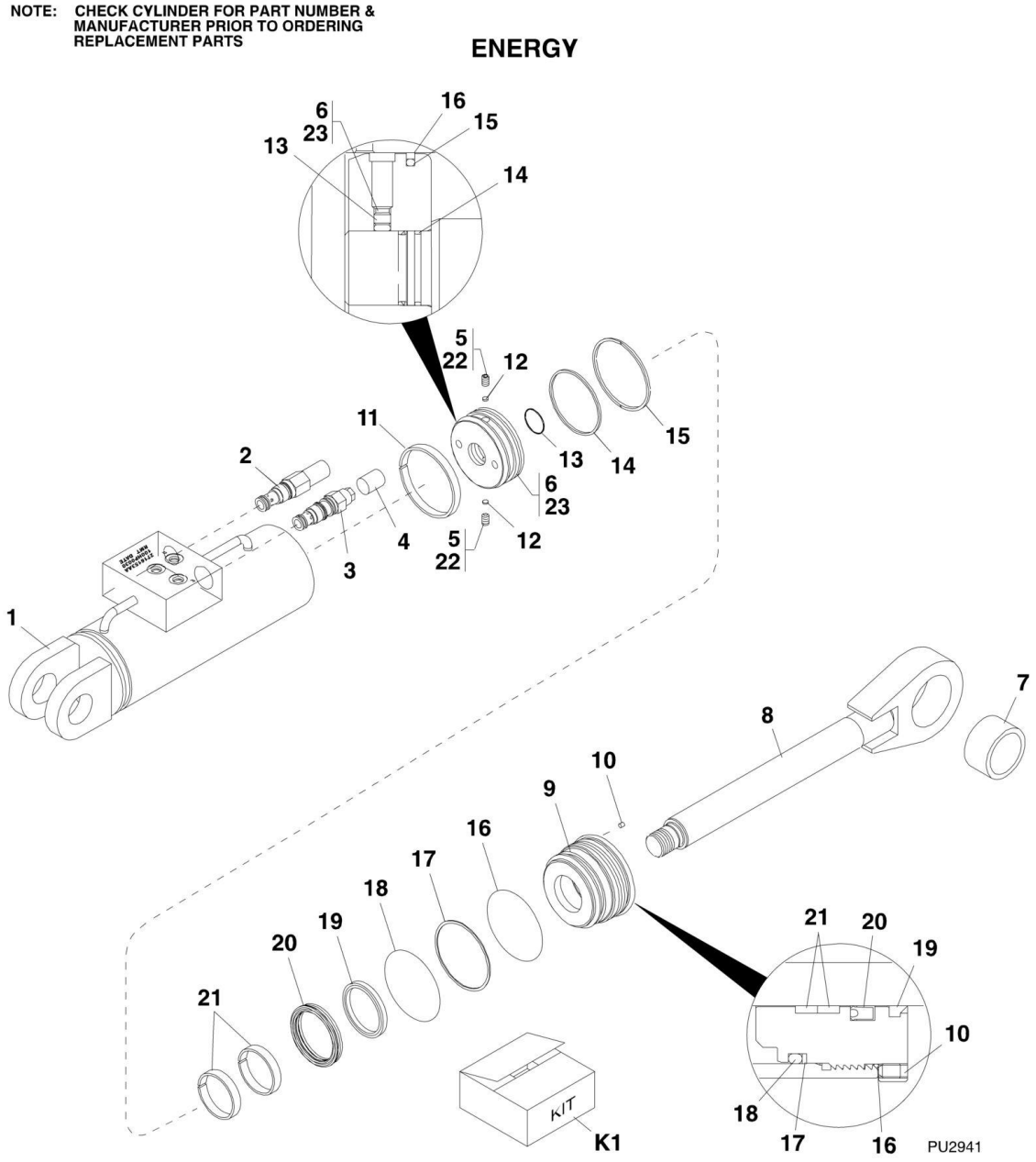

FIGURE 12-5. SWING CARRIAGE CYLINDER ASSEMBLY ENERGY

ITEM	PART NUMBER	QTY	DESCRIPTION	REV
	2717076	NLA	SWING CARRIAGE CYLINDER, (no longer available, use 2717200 for replacement), (includes items 1 thru 21)	B
1	N.S.S.	1	WELDMENT TUBE	
2	70020428	1	RELIEF VALVE CARTRIDGE, (torque to 30-35 lb-ft)	
2	7024574		SEAL KIT	
3	8033786	1	COUNTERBALANCE VALVE, (torque to 30-35 lb-ft)	
3	8025655		SEAL KIT	
4	N.S.S.	1	CAP	
5	8036817	2	SET SCREW, 1/2-20X1/4, (loctite and torque to 85-95 lb-in)	
6	8036819	1	PISTON, (loctite and torque to 425-500 lb-ft)	
7	8036830	2	DURALON JOURNAL BEARING	
8	8036820	1	WELDMENT ROD	
9	8036821	1	HEAD GLAND, (torque to 250-300 lb-ft)	
10	8036811	1	SET SCREW, 1/2-20X1/4	
11	Kit K1	1	PRECISION WEARBAND	
12	Kit K1	2	NYLON BALL	
13	Kit K1	1	O-RING	
14	Kit K1	1	O-RING	
15	Kit K1	1	PISTON SEAL	
16	Kit K1	1	O-RING	
17	Kit K1	1	BACK UP RING	
18	Kit K1	1	O-RING	
19	Kit K1	1	WIPER SEAL	
20	Kit K1	1	Z-SEAL	
21	Kit K1	2	PRECISION WEARBAND	
22	8526007	AR	LOCTITE 242, (apply to item 5)	
23	8526011	AR	LOCTITE 271, (apply to item 6)	
K1	8036783	1	SEAL KIT, (includes items 11 thru 21)	

FIGURE 12-6. 48IN, 50IN, 60IN & 72IN SIDE TILT CARRIAGE CYLINDER

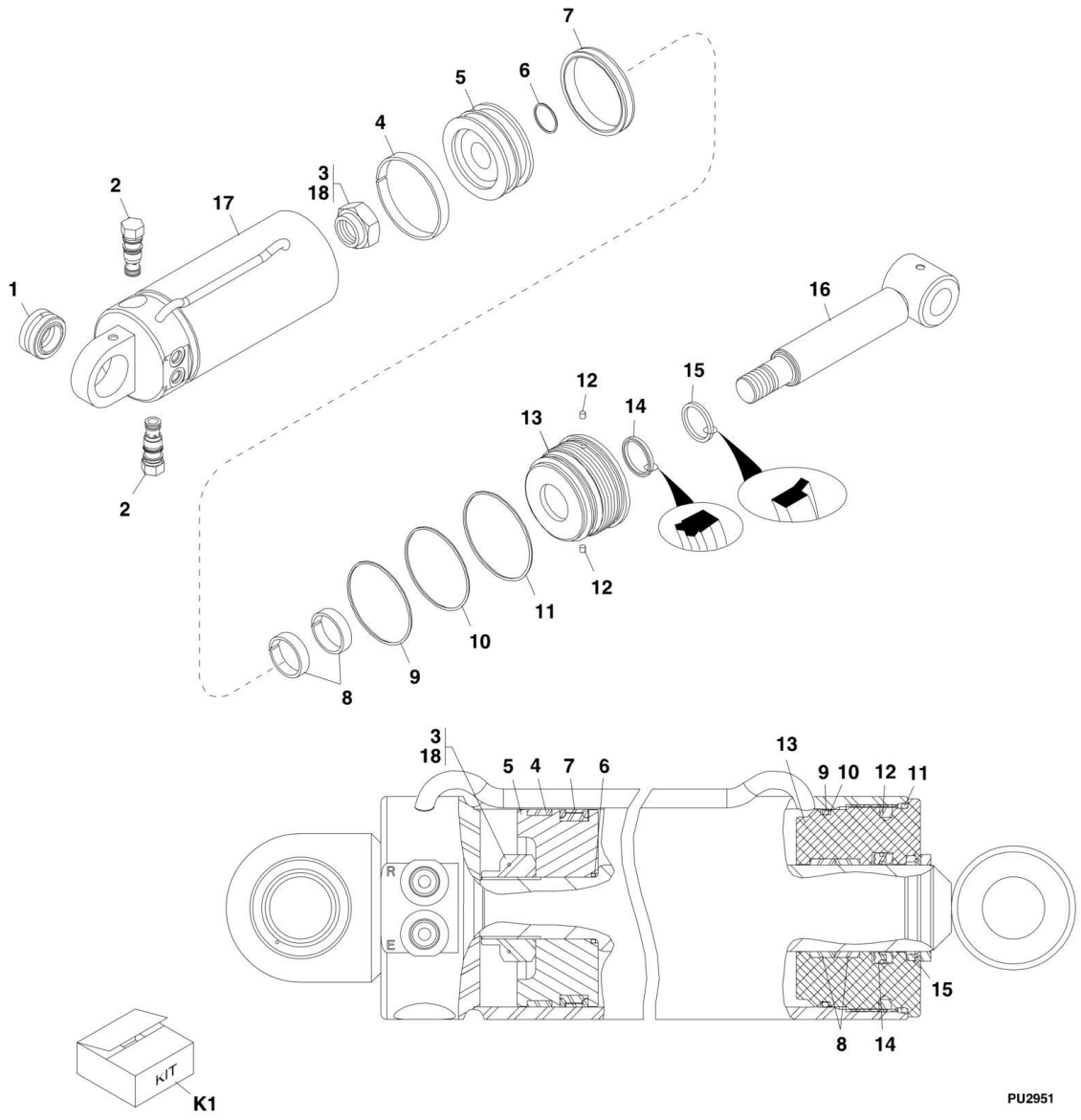

FIGURE 12-6. 48IN, 50IN, 60IN & 72IN SIDE TILT CARRIAGE CYLINDER

ITEM	PART NUMBER	QTY	DESCRIPTION	REV
	2716143	1	48IN, 50IN, 60IN AND 72IN SIDE TILT CARRIAGE CYLINDER, (includes items 1 thru 17)	C, F
1	8036451	1	SPHERICAL BEARING	
2	8036750	2	CHECK VALVE, (torque to 30-35 lb-ft)	
2	2900770	1	SEAL KIT	
3	8035865	1	LOCKNUT, (loctite and torque to 550-650 lb-ft)	
4	Kit K1	1	PRECISION WEARBAND	
5	8035868	1	PISTON	
6	Kit K1	1	O-RING	
7	Kit K1	1	CAPPED T-SEAL	
8	Kit K1	2	PRECISION WEARBAND	
9	Kit K1	1	O-RING	
10	Kit K1	1	BACK-UP RING	
11	Kit K1	1	O-RING	
12	Kit K1	2	LOCKING INSERT	
13	8035867	1	HEAD GLAND, (torque to 300-400 lb-ft)	
14	Kit K1	1	DEEP Z-SEAL	
15	Kit K1	1	WIPER SEAL	
16	8035866	1	ROD WELDMENT	
17	N.S.S.	1	TUBE WELDMENT	
18	0100019	AR	LOCTITE 271, (apply to item 3)	
K1	8035831	1	SEAL KIT, (includes items 4, 6 thru 12, 14 & 15)	

FIGURE 12-7. COLD START OPTION

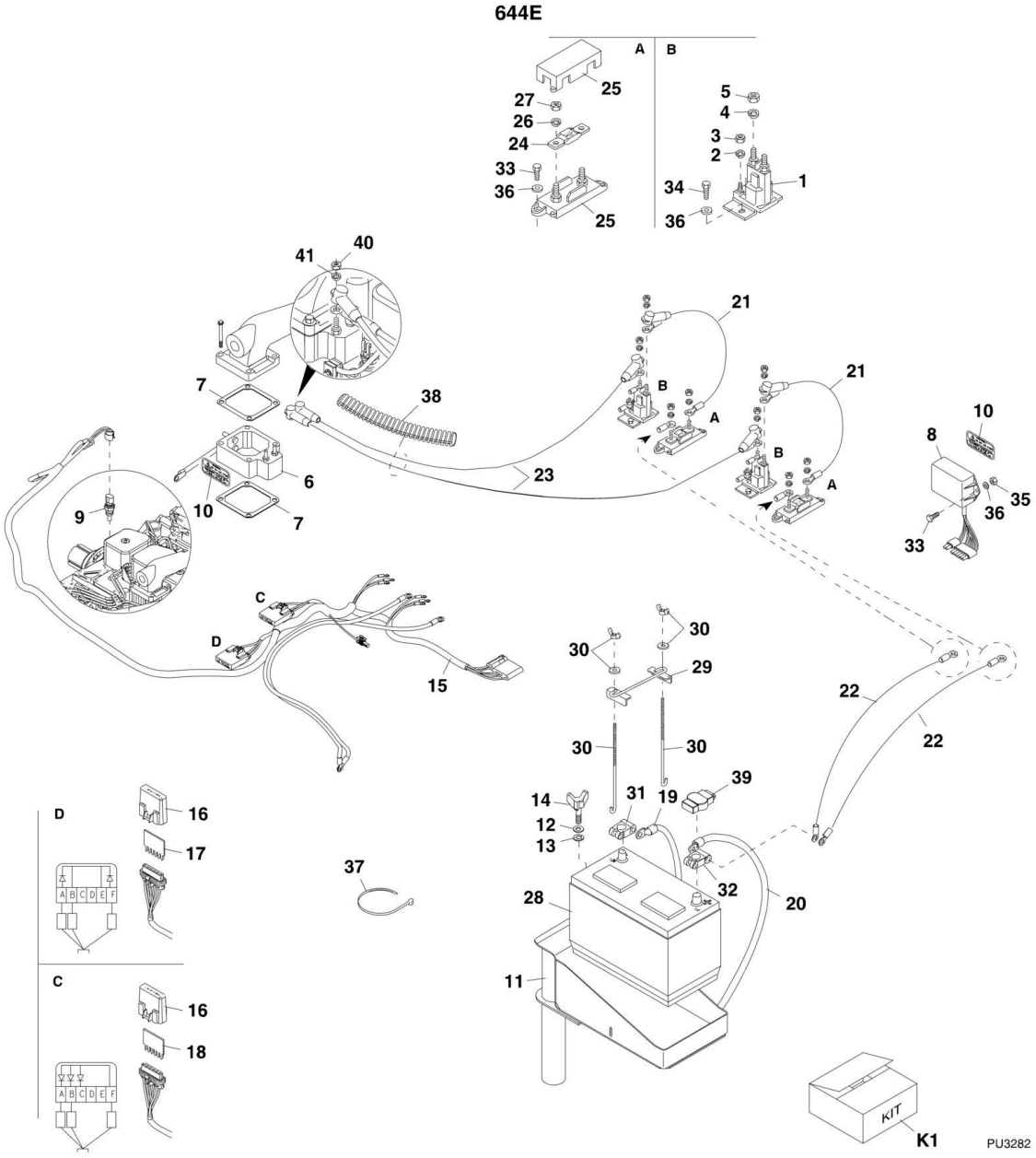

FIGURE 12-7. COLD START OPTION

ITEM	PART NUMBER	QTY	DESCRIPTION	REV
1	8225122	2	4 POST RELAY, (includes items 2 thru 5)	
2	8307003	2	LOCKWASHER, #10	
3	8305003	2	HEX NUT, #10-32	
4	N.S.S.	2	LOCKWASHER, 5/16	
5	N.S.S.	2	HEX NUT, 5/16-24	
6	8270423	1	INTAKE AIR HEATER, 12 VDC, 195 AMP	
7	8270424	2	GRID HEATER GASKET	
8	8270425	1	HEATER CONTROL MODULE	
9	8270426	1	GRID HEATER CONTROL TEMPERATURE SENSOR	
10	8270427	2	GRID HEATER DECAL	
11	7300535	1	UPPER BATTERY SUPPORT	
12	8307221	1	FLAT WASHER, M10	
13	8310070	1	PUSHNUT, 3/8X13/16O.D.	
14	8310709	1	CLAMP KNOB STUD, M10-1.5X40mm	
15	7300346	1	COLD START HARNESS, (includes items 16 thru 18)	
16	8220357	2	CLEAR VES-PAC COVER	
17	8220364	1	2 DIODE CIRCUIT BOARD	
18	8220366	1	3 DIODE CIRCUIT BOARD	
19	4923215	1	NEGATIVE BATTERY CABLE	
20	4923214	1	POSITIVE BATTERY CABLE	
21	7301448	2	GRID HEATER CABLE, FUSE TO RELAY	
22	7301449	2	GRID HEATER CABLE, BATTERY TO FUSE **(Prior to SN 0160010079, Excluding 0160009717)**	
22	4923225	2	GRID HEATER CABLE, BATTERY TO FUSE **(SN 0160010079 to Present, Including 0160009717)**	
23	7301450	2	GRID HEATER CABLE, RELAY TO GRID HEATER	
24	8229259	2	MEGA BOLT FUSE, 125 AMP	
25	8229260	2	FUSE HOLDER, (includes items 26 & 27)	
26	N.S.S.	2	LOCKWASHER, M8	
27	N.S.S.	2	HEX NUT, M8	
28	8270144	1	12 VOLT BATTERY, GROUP 27, 850 CCA	
29	8270145	1	BATTERY HOLD DOWN BRACKET ASSY	
30	8270146	2	BATTERY HOLD DOWN BOLT ASSY	
31	8270147	1	NEGATIVE BATTERY CLAMP	
32	8270148	1	POSITIVE BATTERY CLAMP	
33	8303544	6	HEX HD CAPSCREW, M6-1.0X20mm, PC8.8, (torque to 7-12.5 Nm)	
34	8303545	4	HEX HD CAPSCREW, M6-1.0X14mm, PC8.8	
35	8305652	2	LOCK HEX NUT, M6-1.0	
36	8307219	10	FLAT WASHER, M6	
37	8584001	12	TIE WRAP	
38	7125861	1	CONDUIT, 75IDX60 LG, (cut to fit)	
39	7301893	1	BATTERY TERMINAL INSULATOR	
40	8305047	2	HEX LOCKNUT, M6-1.0	
41	8310687	2	LOCKWASHER, M6, (external tooth)	
K1	8270422	1	GRID HEATER KIT, (includes items 1 thru 10)	

SECTION 13 - RECOMMENDED SPARE PARTS

SECTION 13 - RECOMMENDED SPARE PARTS

FIGURE 13-1. RECOMMENDED SPARE PARTS

ITEM	PART NUMBER	QTY	DESCRIPTION	REV
		Ref	**Note: The following list will service fleets of machines (built to current production per date on the front cover) with repair parts which can be installed in the field. Parts from the list should be replaced when inventory is depleted to keep service parts stock supplied. For further information, contact your JLG dealer or the JLG Industries Parts Department.**	
		Ref	**BOOM ASSEMBLY**	
	2717175	2	Tilt Cylinder Hose	
	2717176	1	Auxiliary Hose	
	7300034	8	Wear Pad	
	7300032	22	Wear Pad	
	7126172	AR	Shim, 3.42mm	
	7126182	AR	Shim, 1.90mm	
	7300517	AR	Shim, 3.42mm	
	7300518	AR	Shim, 1.90mm	
	7300064	6	Spacer	
	7300516	4	Spacer	
	7300973	4	Spacer	
	7118892	1	Quick Attach Pin	
		Ref	**ENGINE**	
	8024038	1	Engine Filter Kit, 644E Tier I, 250 Hour **(Prior to SN 0160048717, Excluding 01600045421)**	
	8024037	1	Engine Filter Kit, 644E Tier I, 1000 Hour **(Prior to SN 0160048717, Excluding 01600045421)**	
	2915034	1	Engine Filter Kit, 644E Tier II, 250 Hour **(Prior to SN 0160048717, Excluding 01600045421)**	
	2915035	1	Engine Filter Kit, 644E Tier II, 1000 Hour **(Prior to SN 0160048717, Excluding 01600045421)**	
	8024049	1	Engine Filter Kit, 250 Hour, (944E) **(Prior to SN 0160041827, Including 0160041849)**	
	8024044	1	Engine Filter Kit, 1000 Hour, (944E) **(Prior to SN 0160041827, Including 0160041849)**	
	70020349	1	Primary Fuel Filter **(644E SN 0160048717 to Present, Including 0160045421; 944E SN 0160049678 to Present)**	
	70020348	1	Secondary Fuel Filter **(644E SN 0160048717 to Present, Including 0160045421; 944E SN 0160049678 to Present)**	
	1001093641	1	Non-locking Fuel Cap **(644E SN 0160015439 to Present; 944E SN 0160015442 to Present)**	
	1001080707	1	Lockable Fuel Cap, (if equipped) **(644E SN 0160015439 through 0160043356; 944E SN 0160015442 through 0160041823)**	
	1001102657	1	Lockable Fuel Cap **(644E SN 0160048717 to Present, Including 0160045421; 944E SN 0160049678 to Present)**	
	8272031	1	21 IN Fan, **(644E Prior to SN 0160048717, Excluding 0160045421; 944E Prior to SN 0160041827, Including 0160041849)**	
	1001122234	1	23 IN Fan **(644E SN 0160048717 to Present, Including 0160045421; 944E SN 0160041827 to Present)**	
	1001131527	1	16 IN Electric Fan **(644E SN 0160048717 to Present, Including 0160045421; 944E SN 0160041827 to Present)**	
	8036605	1	Fan Belt **(644E Prior to SN 0160048717, Excluding 0160045421; 944E Prior to SN 0160041827, Including 0160041849)**	
	7028783	1	Fan Spacer **(644E Prior to SN 0160048717, Excluding 0160045421; 944E Prior to SN 0160041827, Including**	

ITEM	PART NUMBER	QTY	DESCRIPTION	REV
			0160041849)	
		Ref	**DRIVE TRAIN**	
	8223072	1	Selector Transmission Control	
	8160102	1	Throttle Cable, (644E) **(SN 17569 through 20115, SN 0160002519 through 0160003672, Excluding 19557 and 0160003489)**	
	8160103	1	Throttle Cable, (644E) **(SN 0160003690 through 0160043356, Including 19557, 20118 and 0160003489)**	
	1319726	1	Transmission Filter	
	1319433	4	Wheel End Bushing	
	7027211	4	Wheel End Seal	
	80304173	4	Wheel End Hub	
	1319472	8	Wheel Hub Bearing	
	1319470	2	Front Axle Wheel Hub O-Ring, (644E) **(Prior to SN 0160039830, Excluding 0160036724, 0160036811, 0160036907 and 0160037012)**	
	70022203	2	Front Axle Wheel Hub O-Ring, (644E) **(SN 0160039830 to Present, Including 0160036724, 0160036811, 0160036907 and 0160037012)**	
	1321155	2	Front Axle Wheel Hub O-Ring, (944E) **(Prior to SN 0160040124, Excluding 0160034634, 0160036710, 0160036722, 0160036735 and 0160036738)**	
	70022203	2	Front Axle Wheel Hub O-Ring, (944E) **(SN 0160040124 to Present, Including 0160034634, 0160036710, 0160036722, 0160036735 and 0160036738)**	
	1319470	2	Rear Axle Wheel Hub O-Ring, (644E) **(Prior to SN 0160039830, Excluding 0160036724, 0160036811, 0160036907 and 0160037012)**	
	70022203	2	Rear Axle Wheel Hub O-Ring, (644E) **(SN 0160039830 to Present, Including 0160036724, 0160036811, 0160036907 and 0160037012)**	
	1321155	2	Rear Axle Wheel Hub O-Ring, (944E) **(Prior to SN 0160040124, Excluding 0160034634, 0160036710, 0160036722, 0160036735 and 0160036738)**	
	70022203	2	Rear Axle Wheel Hub O-Ring, (944E) **(SN 0160040124 to Present, Including 0160034634, 0160036710, 0160036722, 0160036735 and 0160036738)**	
	8841322	1	Oil Dipstick	
		Ref	**HYDRAULIC SYSTEM**	
	8902335	1	Boom Joystick Assy	
		Ref	Boom Joystick Handle Assy	
	8036475	1	Extend/Retract Cylinder Seal Kit, (644E)	
	8036328	1	Extend/Retract Cylinder Seal Kit, (944E) **(SN 18554 through 20123, SN 0160002514 through 0160005729)**	
	70020310	1	Extend/Retract Cylinder Seal Kit, (944E) **(SN 0160005814 to Present)**	
	8036474	1	Lift Cylinder Seal Kit, (644E)	
	8036644	1	Lift Cylinder Seal Kit, (944E)	
	8035326	1	Attachment Tilt Cylinder Seal Kit, (644E)	
	8036547	1	Attachment Tilt Cylinder Seal Kit, (944E)	
	8036477	1	Frame Level Cylinder Seal Kit, (644E)	
	8036543	1	Frame Level Cylinder Seal Kit, (944E) **(SN 17569 through 20123, SN 0160002514 through 0160004849, Excluding 0160004238 and 0160004239)**	
	8036477	1	Frame Level Cylinder Seal Kit, (944E) **(SN 0160004927 to Present, Including 0160004238 and 0160004239)**	
	8036477	1	Stabil-Trak Cylinder Seal Kit, (644E)	

SECTION 13 - RECOMMENDED SPARE PARTS

ITEM	PART NUMBER	QTY	DESCRIPTION	REV
	8036550	1	Stabil-Trak Cylinder Seal Kit, (944E) **(SN 17569 through 20123, SN 0160002514 through 0160004849, Excluding 0160004238 and 0160004239)**	
	8036477	1	Stabil-Trak Cylinder Seal Kit, (944E) **(SN 0160004927 to Present, Including 0160004238 and 0160004239)**	
	8035332	1	Tilt Compensation Cylinder Seal Kit, (644E)	
	8036551	1	Tilt Compensation Cylinder Seal Kit, (944E)	
	8036476	1	Transfer Cylinder Seal Kit	
	8035830	1	Swing Carriage (Rosenboom) Cylinder Seal Kit	
	8036783	1	Swing Carriage (Energy) Cylinder Seal Kit	
	8035831	1	Tilt Carriage Cylinder Seal Kit	
	8320053	1	Hydraulic Filter Element	
	7138740	1	Tank Strainer	
	7300479	1	Filler/Breather Cap	
	91563136	1	Fluid Level Sight Gauge	
		Ref	**ELECTRICAL**	
	8223246	1	Engine Coolant Temperature Sender, (644E)	
	8223246	1	Engine Coolant Temperature Sender, (944E)	
	7301076	1	Fuel Level Sender	
	8270621	1	Backup Alarm	
	1001125470	1	Backup Alarm Grill, (944E)	
	1101202	1	Ignition Switch	
	7029525	1	Alternator **(644E SN 0160014889 through 0160043356; 944E SN 0160014891 through 0160041823)**	
	70023287	1	Alternator, (944E) **(SN 0160041827 through 0160044164)**	
	70024464	1	Alternator **(644E SN 0160048717 to Present, Including 0160045421; 944E SN 0160041827 to Present)**	
	7026666	1	Starter **(644E Prior to SN 0160048717, Excluding 0160045421; 944E Prior to SN 0160041827, Including 0160041849)**	
	70020352	1	Starter, (944E) **(SN 0160041827 through 0160049550)**	
	1001128594	1	Starter **(644E SN 0160048717 to Present, Including 0160045421; 944E SN 0160049678 to Present)**	
	10268663	1	Horn	
		Ref	**MISC**	
	8342813	1	Hood Latch Key	
	8342808	1	Door Key	
	1101203	1	Ignition Key	
	80904003	1	Hydraulic Test Kit	
	8990459	1	Owner/Operator Manual, (644E) **(SN 17569 through 0160003877)**	
	3120038	1	Owner/Operator Manual, (644E) **(SN 0160003878 through 0160037404)**	
	8990496	1	Owner/Operator Manual, (944E) **(SN 18554 through 0160003881)**	
	3120039	1	Owner/Operator Manual, (944E) **(SN 0160003882 through 0160037751)**	
	31200354	1	Operation and Safety Manual **(SN 0160037794 to Present)**	
	8990461	1	Service Manual **(644E Prior to SN 0160048717, Excluding 0160045421; 944E Prior to SN 0160041827)**	
	31200355	1	Service Manual **(644E SN 0160048717 to Present, Including 0160045421; 944E SN 0160041827 to Present)**	
		Ref	**Special Tools**	
	80304484	1	Pry Bar Set, ZF Axle	
	80304480	1	Two-armed Puller, ZF Axle	
	7025854	1	Two-armed Puller, ZF Axle	
	70010241	1	Threaded Ring, M105X3, ZF Axle	

ITEM	PART NUMBER	QTY	DESCRIPTION	REV
	70010239	1	Two-armed Puller, 160-150mm, ZF Axle and Transmission	
	70023172	1	Gripping Insert Super, ZF Axle	
	70023173	1	Back-off Insert, Rear ZF Axle	
	70023174	1	Eye Bolt Assortment, ZF Axle and Transmission	
	70022872	1	Internal Extractor, 45-58mm, ZF Axle and Transmission	
	70022873	1	Internal Extractor, 70-100mm, ZF Axle	
	70022871	1	Counter Support, Rear, ZF Axle and Transmission	
	7029740	1	Driver, ZF Axle	
	7029739	1	Driver, ZF Axle	
	7029738	1	Driver, ZF Axle	
	70010244	1	Internal Extractor, ZF Axle	
	70010245	1	Counter Support, ZF Axle	
	70022866	1	Spanner, ZF Axle	
	70022867	1	Torque Spanner, 5-45Nm, ZF Axle	
	80304492	1	Wheel Bolt Puller Basic Set, ZF Axle	
	70110101	1	Driver, ZF Axle	
	80304498	1	Handle, ZF Axle	
	70010281	1	Slotted Nut Wrench, ZF Axle	
	70010283	1	Installer, ZF Axle	
	70010284	1	Installer, ZF Axle	
	80304497	1	HP-Pump, ZF Axle	
	7025856	1	Striker, ZF Axle	
	70010243	1	Measuring Hub, 9/16in-18UNF	
	80304486	1	Two-armed Puller, 500mm, ZF Axle, (944E-42)	
	70010240	1	Gripping Insert Super, ZF Axle, (944E-42)	
	70010285	1	Extracting Tool, ZF Axle, (944E-42)	
	70010282	1	Assembly Ring, ZF Axle, (944E-42)	
	70023175	1	Driver, ZF Axle, (944E-42)	
	70022835	1	Support, ZF Transmission	
	7025112	1	Support, ZF Transmission	
	70024052	1	Support, ZF Transmission	
	6623749	1	CAP, KEYLESS,DIESEL FUEL	

PART NUMBER INDEX

PART NUMBER INDEX

0080268.....505, 509
0080271.....131
0100011.....69, 121, 319, 335, 349, 530
0100019.....607
0100063.....65
0100087.....505, 509
0100093.....132, 135
0240156.....107
0274236.....586
0274385.....307
0541408.....351, 353
0641405.....98, 530, 541
0641406.....303, 319
0641509.....351, 353
0641514.....423
0641518.....141
0641606.....530
0641609.....351, 353
0641610.....121
0641611.....141
0641612.....69
0641628.....122, 425
0641676.....530
0642032.....63, 65, 69
0681610.....375, 531
0681616.....335
0681618.....335
0681810.....69
0681812.....369, 373, 375
0682032.....122
0682034.....121
0683020.....13, 15, 25
0700610.....331
0700815.....531
0701017.....121
0701221.....29
0710827.....335
0711015.....121
0711017.....335
0741610.....69
0760810.....531
0760815.....149
0761010.....25
0761012.....122, 425, 530
0761210.....373, 530, 541
0761230.....122
0770810.....335
0770816.....335
0791505.....530
0791606.....530
0860520.....97, 319
0903071.....370, 374
0903221.....423
0903609.....29
0930020.....105
1001001422.....131, 135
1001080707.....132, 135, 612
1001081280.....321
1001081306.....325
1001081310.....325, 327
1001090063.....69
1001090064.....69
1001090134.....515
1001090140.....69
1001091304.....505
1001092280..... 97
1001092281..... 506
1001092358..... 601
1001092359..... 593
1001092360..... 551
1001092391..... 95
1001092481..... 97
1001092482..... 97
1001093140..... 97
1001093171..... 93, 97
1001093273..... 107
1001093342..... 537
1001093377..... 77, 107
1001093465..... 107
1001093641..... 131, 135, 612
1001093891..... 135
1001093892..... 135
1001093944..... 135
1001094330..... 107
1001094782..... 19
1001094830..... 107
1001095418..... 73
1001095650..... 435, 439
1001095739..... 255
1001095741..... 255
1001095744..... 285
1001095810..... 97
1001096019..... 97
1001096020..... 97
1001096021..... 97
1001096023..... 97
1001096024..... 97
1001096025..... 97
1001096306..... 97
1001096314..... 592, 593, 597, 598
1001096404.. 34, 37, 586
1001097072..... 97
1001097168..... 97
1001098582..... 98
1001098769.. 33, 37, 586
1001098971..... 141
1001099113..... 69
1001099115..... 69
1001099251..... 141
1001099351..... 83
1001099901..... 87
1001099902..... 87
1001100005..... 297, 299
1001100044..... 153, 155
1001100045..... 153
1001100227..... 77
1001100228..... 77
1001100229..... 77
1001100284..... 297, 299
1001100324..... 297, 299
1001100822..... 59
1001100823..... 59
1001100824..... 59
1001100849..... 153, 155
1001100967..... 79
1001101085..... 319
1001101115..... 77
1001101116..... 77
1001101867..... 49
1001101956..... 69
1001102378..... 69
1001102657..... 131, 135, 612
1001102813..... 98
1001102844..... 313
1001103182..... 517
1001103216..... 351
1001103491..... 487
1001103492..... 511
1001103493..... 343
1001103494..... 549
1001103619..... 187, 235
1001103626..... 161
1001103627..... 161
1001103631..... 215
1001103637..... 97
1001103730..... 97
1001103736..... 97
1001103931..... 586
1001105892..... 309
1001106011..... 581, 586
1001106736..... 571
1001107559..... 155
1001108668..... 110
1001109417..... 321
1001109573..... 29
1001109604..... 29
1001110410..... 581, 586
1001110411..... 581, 586
1001110704..... 73
1001110784..... 333
1001111190..... 73, 110
1001112199..... 374
1001112200..... 375
1001112202..... 375
1001112241..... 121
1001112244..... 473
1001112264..... 25
1001112271..... 25
1001112302..... 121
1001112303..... 121
1001112306..... 121
1001112310..... 149
1001112312..... 149
1001112327..... 155
1001112328..... 155
1001112329..... 155
1001112330..... 155
1001112352..... 373
1001112354..... 373
1001112366..... 509
1001112367..... 509
1001112368..... 373
1001112370..... 373
1001112377..... 373
1001112379..... 373
1001112381..... 25
1001112382..... 25
1001112383..... 26
1001112384..... 26
1001112386..... 26
1001112387..... 26
1001112594..... 429
1001112601..... 373
1001112602..... 373
1001112603..... 373
1001112612..... 571
1001112800.....375
1001112801.....375
1001114675.....331
1001114803.....141
1001114822.....530
1001114823.....530
1001114824.....530
1001114825.....530
1001114940.....155
1001114941.....333
1001114942.....333
1001114943.....135
1001114944.....135
1001114945.....125
1001115174.....333
1001115205.....587
1001115208.....587
1001116122.....141
1001116177.....141
1001116181.....373
1001116701.....577
1001116723.....575, 577
1001116733.....575
1001116734.....575
1001116751.....571
1001116810.....571
1001116812.....571
1001116821.....571
1001116981.....571
1001117025.....571
1001117055.....571
1001117064.....573
1001117070.....571
1001117118.....531
1001117119.....573
1001117214.....122, 333
1001118282.....575
1001118887.....571
1001118939.....573
1001119004.....571
1001119049.....571
1001119106.....571
1001119339.....121
1001119411.....571
1001119801.....425
1001119904.....531, 541
1001119969.....541
1001120376.....141
1001120377.....141
1001120636.....541
1001120703.....353
1001120707.....19
1001120740.....530
1001120839.....122, 425
1001120840.....425
1001120842.....425
1001120844.....425
1001120853.....425
1001120883.....530
1001120884.....530
1001120914.....69
1001120915.....69
1001120988.....155
1001121022.....530
1001121062.....530
1001121070.....377
1001121071.....411

1001121085 ..... 297, 299
1001121100 377
1001121113 411
1001121309 121
1001121341 141
1001121568 141
1001121579 141
1001121586 141
1001121599 141
1001121600 141
1001121628 429
1001121629 429
1001121843 141
1001121911 141
1001121963 373
1001122234 ..... 121, 612
1001122286 141
1001122313 141
1001122314 141
1001122315 141
1001122417 530
1001122421 531
1001122480 531
1001125007 331
1001125299 26
1001125301 26
1001125401 25
1001125402 25
1001125456 25
1001125457 25
1001125458 25
1001125459 25
1001125463 25
1001125470 ..... 565, 614
1001125709 55
1001125710 55
1001125711 56
1001125720 25
1001125721 25
1001125892 587
1001125968 255
1001127467 347
1001128594 ..... 129, 614
1001129286 571
1001130308 565
1001130369 149
1001130443 149
1001130444 149
1001130445 149
1001130452 149
1001131271 586
1001131527 ..... 141, 612
1001131528 141
1001131631 142
1001131727 141
1001131761 531
1001131818 336
1001131991 26
1001132178 142
1001132205 142
1001132240 215
1001132276 142
1001132301 142
1001132367 155
1001132368 155
1001132514 63
1001133072 69
1001134329..... 581, 586
1001134490..... 575
1001135553..... 475
1001135555..... 475
1001136632..... 571
1001136660..... 571
1001136877..... 336
1001137512..... 95
1001137644..... 127
1001137959..... 375
1001137960..... 375
1001137961..... 373
1001137971..... 375
1001137990..... 374
1001138002..... 373
1001138468..... 375
1001142508..... 335
1001142790..... 113
1001143083..... 19
1001143084..... 55
1001143475..... 336
1001143521..... 336
1001143522..... 336
1001146084..... 65
1001146086..... 65
1001146088..... 65
1001146159..... 65
1001146160..... 65
1001146644..... 336
1001147574..... 129
1001147881..... 530
1001147882..... 530
1001148177..... 331
1001151099..... 297
1001151100..... 297
1001151103..... 299
1001151104..... 299
1001151107..... 297
1001151109..... 299
1001151561..... 65
1001155219..... 530
1001155287..... 336
1001160152..... 577
1001166101..... 577
10114383 ..... 345, 347
10116401 ..... 345, 347
10118167 ..... 53, 55
1012355 81
10125085 81
10138329 483
10138818 .. 345, 347, 349
10139087 313
10165110 53
10165950 ..... 53, 55
10167789 .. 533, 535, 537
10238252 ..... 33, 37
10239367 317
10267585 81
10268516 ..... 145, 147
10268663 ..... 565, 614
10268992 511
10339076 483
1060379 98
1065110 55
10700303 317
10700484 81
10701253 317
10704216.....13, 15, 19
10705034.....89, 91
10705107.....317
10717672.....369, 375
10720496.....339
10721556.....81
10721557.....81
10725268.....313
10725464.....317
10727327.....81
10727770.....81
10728873.....131, 135
10731709...259, 285, 289
10731744.....259
10731761.....287
10731789.....207, 249
10731790.....187, 235
10731845..261, 263, 265, 267, 273, 275
10731949..190, 193, 238, 241
10731959.....291
10732071.....289
10732072.....289
10732095.....287
10740662.....483
10837247.....493
10837352.....487
10837580.....488
10837924.....477, 481
10867167.....493
10868086.....487
10868902.....487
1101202....543, 545, 549, 614
1101203....543, 545, 549, 614
1101244.....485
1101312.....145, 147
1101313.....145, 147
11045080.....81
11160110.....81
11170040.....81
1120591.....132
11419080.....81, 85
1170021.....63
1170024.....63
1170027.....63
1170054.....69
1170057.....69
1319210.....201, 205, 245
1319214.....193, 241
1319229.....257
1319333.....163, 218
1319334.....163, 218
1319335.....163, 218
1319336.....163, 218
1319337.....163, 218
1319338.....163, 218
1319339.....163, 218
1319340.....163, 218
1319341.....163, 218
1319342.....163, 218
1319343.....163, 218
1319344.....163, 218
1319345.....163, 218
1319346.....163, 218
1319347..... 163, 218
1319348..... 163, 218
1319349..... 163, 218
1319350..... 163, 218
1319351..... 163, 218
1319352..... 163, 218
1319353... 163, 168, 176, 218, 221, 225
1319354..... 163, 217
1319355..... 163, 217
1319356..... 163, 217
1319357..... 163, 217
1319358..... 163, 217
1319359..... 163, 217
1319360..... 163, 217
1319361..... 163, 217
1319362..... 163, 217
1319363..... 163, 217
1319364..... 163, 217
1319365..... 163, 217
1319366..... 163, 217
1319367..... 163, 217
1319369..... 163, 217
1319370..... 163, 217
1319371..... 163, 217
1319372..... 163, 217
1319373..... 163, 217
1319374..... 163, 217
1319375..... 163, 217
1319376..... 163, 217
1319377..... 163, 217
1319378..... 163, 217
1319379..... 163, 217
1319380..... 163, 217
1319381..... 164, 217
1319382..... 164, 217
1319383..... 164, 217
1319384..... 164, 217
1319385..... 164, 217
1319386..... 164, 217
1319387..... 217
1319388..... 164, 217
1319389..... 164, 217
1319390..... 164, 217
1319391..... 164, 217
1319392..... 164, 217
1319393..... 164, 217
1319394..... 164, 217
1319395..... 164, 217
1319396..... 164, 217
1319397..... 164, 218
1319398..... 164, 218
1319399..... 164, 218
1319400..... 164, 218
1319401..... 164, 218
1319402..... 164, 218
1319406..... 164, 217
1319412..... 229
1319414..... 229
1319415..... 179, 229
1319423... 183, 187, 233, 235
1319425... 183, 189, 233, 237
1319429..... 183, 233
1319433.... 183, 233, 613

PART NUMBER INDEX

1319436....183, 187, 233, 235, 291
1319439.....183, 233
1319440.....183, 233
1319441....183, 187, 233, 235
1319444....164, 201, 217, 245
1319445.....201, 205, 245
1319447....201, 205, 207, 245, 249
1319448.....201, 245
1319449.....201, 245
1319450.....201, 245
1319451.....201, 245
1319452.....201, 245
1319453.....201, 245
1319454.....201, 245
1319455.....201, 245
1319456.....201, 245
1319457.....201, 245
1319458.....201, 245
1319459.....201, 245
1319460.....201, 245
1319461.....201, 245
1319462.....201, 205, 245
1319463.....201, 245
1319464....201, 205, 207, 245, 249
1319470.....201, 245, 613
1319472....201, 205, 207, 246, 249, 613
1319476.....205
1319477....202, 205, 207, 246, 249
1319483.....209, 251
1319484.....209, 251
1319485.....209, 251
1319488.....209, 251
1319491.....189, 237
1319496.....190, 238
1319497.....190, 238
1319499.....190, 238
1319500.....190, 238
1319501.....190, 238
1319502.....190, 238
1319504.....190, 238
1319505.....190, 238
1319506....183, 190, 209, 211, 233, 238, 251
1319510.....189, 237
1319511.....189, 237
1319512.....189, 237
1319513.....189, 237
1319514.....189, 237
1319515.....189, 237
1319516.....189, 237
1319517.....189, 237
1319518.....189, 237
1319519.....189, 237
1319520.....189, 237
1319521.....189, 237
1319522.....189, 237
1319523.....189, 237
1319524.....189, 237
1319525.....189, 237
1319526.....189, 237
1319527..... 189, 237
1319529..... 189, 237
1319530..... 189, 237
1319531..... 189, 237
1319532..... 189, 237
1319533..... 189, 237
1319534..... 189, 237
1319535..... 189, 237
1319536..... 189, 237
1319537... 189, 193, 237, 241
1319538..... 189, 237
1319539... 189, 193, 237, 241
1319540... 189, 193, 237, 241
1319541..... 189, 237
1319542... 189, 193, 237, 241
1319543..... 189, 237
1319545... 189, 193, 237, 241
1319558..... 257
1319563..... 257
1319571.... 257, 259, 291
1319573..... 291
1319576..... 257
1319578... 187, 193, 213, 235, 241, 253, 259, 291
1319581..... 259, 285
1319585.... 257, 259, 285
1319590..... 259
1319591..... 261, 263
1319593..... 277, 279
1319594..... 277, 279
1319595... 261, 263, 265, 267, 273, 275, 277, 279, 281, 283
1319596... 261, 263, 265, 267, 273, 275
1319600... 261, 263, 265, 267, 269, 271, 273, 275, 277, 279, 281, 283
1319601... 261, 263, 265, 267, 269, 271, 273, 275, 277, 279, 281, 283
1319602... 261, 263, 265, 267, 269, 271, 273, 275, 277, 279, 281, 283
1319603... 261, 263, 265, 267, 269, 271, 273, 275, 277, 279, 281, 283
1319604... 261, 263, 265, 267, 269, 271, 273, 275, 277, 279, 281, 283
1319606... 261, 263, 265, 267, 273, 275
1319607..... 261, 263
1319608.... 261, 263, 285
1319614..... 265, 267
1319615... 265, 267, 273, 275, 277, 279, 281, 283
1319617... 277, 279, 281, 283
1319618... 277, 279, 281, 283
1319619..... 269, 271
1319620... 277, 279, 281, 283
1319621... 277, 279, 281, 283
1319622... 277, 279, 281, 283
1319623... 277, 279, 281, 283
1319624... 277, 279, 281, 283
1319625... 277, 279, 281, 283
1319626... 277, 279, 281, 283
1319627... 277, 279, 281, 283
1319628... 277, 279, 281, 283
1319629... 277, 279, 281, 283
1319630... 277, 279, 281, 283
1319631... 277, 279, 281, 283
1319632... 277, 279, 281, 283
1319635..... 273, 275
1319636... 273, 275, 277, 279, 281, 283
1319638... 277, 279, 281, 283
1319641..... 257
1319646..... 259
1319647..... 291
1319648..... 291
1319649..... 291
1319652..... 289
1319661..... 289
1319666... 187, 190, 235, 238
1319670.... 259, 285, 289
1319683..... 289
1319684..... 289
1319685..... 289
1319686..... 289
1319687..... 289
1319688..... 289
1319689..... 289
1319693..... 289
1319694..... 289
1319719..... 285
1319726..... 285, 613
1320748..... 291
1320754..... 291
1320755..... 291
1321136..... 370, 374
1321148..... 183, 233
1321149..... 183
1321150..... 190, 238
1321151..... 190, 238
1321152..... 190, 238
1321153..... 179, 229
1321154..... 179, 229
1321155.... 205, 245, 613
1321157.... 201, 205, 245
1321158..... 189, 237
1321159..... 189, 237
1321162.....190, 238
1321163.....190, 238
1321172.....243
1321174.....190, 238
1321175.....205
1321177.....269
1321178.....243
1321184.....179, 229
1321185.....171
1321186.....171
1321187.....171
1321189.....171
1321190.....171
1321191.....211
1321194.....172
1321196.....171
1321197.....171
1321198.....171
1321199.....171
1321201.....172
1321202.....172
1321203.....172
1321204.....172
1321205.....211
1321206.....195
1321207.....195
1321208.....195
1321210.....172
1321211.....164, 217
1321212.....172
1321213.....171
1321214.....211
1321215.....179, 229
1321217.....179
1321218.....179
1321219.....179
1321220.....179
1321221.....179
1321225.....179, 229
1321226....202, 207, 246, 249
1321228.....205
1321230.....171
1321231.....209, 251
1321232.....211
1321233.....211
1321237.....164, 217
1321238.....251
1321239.....246
1321242.....209, 251
1321244.....195
1321245.....201, 245
1321246.....201, 245
1321247.....209, 251
1321248.....172
1321249.....205
1321250.....205
1321251.....205
1321254.....205
1321255.....211
1321256.....205
1321257.....205
1321258.....211
1321259.....229
1321260.....229
1321265.....289
1321339.....531

1321733 .... 378, 386, 398
1321797 117
1321814 125
1321918 125
1321951 125
1321955 125
1380165 538
14404978 132
1560020 527
1560023 147
1684436 603
170023400 175
1701509 98
1701640 587
1702631 586
1702773 97
1704277 98
1704885 97
1705687 ..... 582, 586
1705936 581
1705956 582
1705957 582
1706101 ..... 582, 586
1706103 ..... 581, 586
1706104 ..... 581, 586
1706105 ..... 581, 586
1706170 582
1706298 586
1706299 586
1706300 ..... 581, 587
1706301 587
1706302 586
1706303 586
1706304 586
1706306 586
1706511 ..... 582, 586
1706767 586
1706768 586
1706850 586
1706851 586
1706892 97
1707077 ..... 505, 581
1707079 ..... 505, 586
1707114 ..... 505, 586
2080040 98
2080044 97
2110404 421
2110604 ... 389, 415, 421, 513
2110606 69, 91, 357, 361, 394, 401, 403, 411, 415, 417, 419, 421
2110608 69
2110806 ..... 377, 378
2110808 ..... 69, 366, 370, 390, 394, 398, 405, 409, 411, 509
2110810 ..... 81, 381, 386
2111212 ... 366, 370, 374, 509
2111612 .... 365, 369, 374
2130404 421
2130604 .... 411, 415, 513
2130606 89, 91, 366, 370, 374, 377, 390, 401, 403, 411, 415, 419, 421, 513
2130608 ..... 89, 91, 411
2130808 ..... 81, 378, 389, 393, 397, 405, 407, 411, 509
2130810 411
2130812 ..... 381, 385
2131210 ..... 423, 425
2131212 ... 365, 369, 374, 381, 385, 386
2131216 425
2131616 ..... 423, 429
2150606 .... 403, 419, 421
2150808 411
2151216 425
2170106 ..... 412, 421
2170108 398
2170206 421
2170212 386
2170306 ... 377, 394, 411, 513
2170406 .... 370, 374, 377
2170706 ... 377, 378, 403, 411, 419, 421, 513
2170708 377
2170716 .... 369, 374, 429
2170812 425
2170912 ..... 365, 369
2171108 385
2171112 385
2171206 89
2172006 377
2172010 ... 381, 386, 389, 393, 397
2172104 421
2172106 69, 89, 377, 403, 411, 415, 419, 421, 513
2172108 ..... 81, 409
2172116 ... 365, 369, 374, 427
2172312 425
2180467 141
2220218 .... 401, 403, 513
2220282 333
2220371 ..... 67, 79
2220372 67
2220415 ..... 71, 73
2220473 ..... 71, 73
2220609 ..... 71, 73
2220628 ..... 71, 73, 79
2220767 141
2220775 71
2300037 335
2340037 95
2340038 95
2340039 95
2340045 95
2340046 95
2400066 ..... 575, 577
2600281 97
2711992 67
2716143 607
2716153 603
2716629 411
2716850 467
2716861 433
2716864 447
2716894 449
2716897 437
2716900 463
2716901 465
2716904 441
2716906 453
2716908 459
2716911 ..... 365, 369, 373
2716914 427
2716915 427
2716920 409
2716921 409
2716922 377
2716923 377
2716924 377
2716925 411
2716927 411
2716928 411
2716934 ..... 365, 369, 374
2716936 365
2716937 365
2716938 377
2716939 377
2716940 ..... 381, 386
2716950 ..... 401, 403
2716951 377
2716952 377
2716953 411
2716954 411
2716955 411
2716956 411
2716957 411
2716960 ..... 415, 417, 419
2716961 415
2716962 ..... 415, 417, 419
2716963 .... 401, 403, 415, 417, 419
2716964 415
2716965 415
2716966 ..... 401, 403
2716967 415
2716968 ..... 417, 419
2716969 417
2716974 366
2716980 405
2716981 405
2716986 381
2716989 381
2716997 381
2716998 ..... 381, 389, 393
2717000 ..... 401, 403
2717012 ..... 451, 455
2717013 ..... 457, 461
2717014 423
2717015 423
2717016 427
2717029 ..... 365, 369, 373
2717030 ..... 365, 369
2717031 ..... 365, 369
2717032 ..... 365, 369
2717038 377
2717039 411
2717040 411
2717050 423
2717051 423
2717057 ..... 401, 403
2717058 ..... 401, 403
2717059 ..... 401, 403
2717060 ..... 401, 403
2717062 390
2717063 .... 381, 386, 397
2717064 ..... 381, 386
2717065 .... 390, 394, 397
2717066 .... 390, 394, 397
2717067 377
2717069 381
2717070 ..... 381, 401
2717076 605
2717084 421
2717093 81
2717115 389
2717118 390
2717131 394
2717132 394
2717133 394
2717134 393
2717144 ..... 381, 385
2717145 ..... 381, 385
2717146 ..... 381, 385
2717147 ..... 381, 385
2717160 ..... 89, 91
2717161 ..... 89, 91
2717162 ..... 89, 91
2717169 ..... 401, 403
2717170 403
2717171 ..... 401, 403
2717172 ..... 401, 403
2717173 ..... 401, 403
2717175 ... 389, 393, 397, 612
2717176 ... 389, 393, 397, 612
2717178 421
2717180 421
2717184 421
2717186 421
2717187 421
2717188 421
2717189 421
2717190 421
2717191 ..... 389, 393
2717192 ..... 389, 393
2717193 .... 370, 374, 477
2717194 .... 370, 374, 477
2717200 603
2717204 .... 366, 370, 374
2717209 421
2717241 435
2717242 445
2717243 439
2717252 394
2717253 394
2717265 ..... 386, 397
2717266 386
2717267 385
2717268 385
2717269 385
2717270 385
2717271 385
2717272 407
2717273 385
2717275 397
2717276 397
2717277 385
2717278 385

PART NUMBER INDEX

2717283.....89, 91
2717287.....71, 73
2717288.....369, 374
2717289.....369, 374
2717384.....386
2720557.....139
2900707.....488
2900770....447, 449, 515, 607
2915007.....478
2915023.....517
2915028.....333
2915032.....153
2915034.....117, 612
2915035.....118, 612
2915053.....562
2915055.....139
2915056.....319
2915155.....131
2915158.....349
2915170.....117
2915192.....582
2940074.....97
31200160.....97
31200336.....97
31200354.....614
31200355.....614
3120038.....614
31200387.....97
31200388.....97
3120039.....614
3140007.....331
3251813.....582
3271601....122, 141, 335, 425, 531
3290405.....23, 25
3290805.....335
3291001.....530
3300240.....63, 65, 69
3311401.....565
3311405.....98
3380542.....313
3421453.....98
3423242.....63, 65, 69
3423275.....63, 65, 69
3423276.....63, 65, 69, 73
3423307.....69
3460407.....153
3460408.....153
3460440.....369
3460446.....423
3460471.....423
3520072.....97
3520198.....97
3575924.....13, 15, 19
3575947.....117
3576011.....159
3576286.....351, 353
3620060.....139
3760170.....98
3820020.....97
3841203.....69
3860123.....41
3900140.....132
3900382.....335
3931632.....365, 369, 374
3980039.....319
4060805..... 333
4100181..... 505, 581
4105262..... 33, 37, 586
4107692..... 71
4107702..... 71
4107712..... 71
4108232..... 67
4108302..... 505, 581
4108991..... 581
4109801..... 581, 586
4110130..... 581, 586
4110137..... 581
4110184.... 137, 139, 581
4110252..... 81
4110349..... 581, 586
4110350..... 581
4110352..... 581
4110356..... 581, 586
4110358..... 581
4110359..... 581, 586
4110360..... 581, 586
4110361..... 581
4110366..... 581, 586
4110367..... 581, 586
4110389..... 581
4110390..... 581
4110392..... 581, 586
4110405..... 581, 586
4110412..... 81, 85
4110422.... 81, 83, 85, 87
4110423..... 581, 586
4110424..... 81
4110461..... 103
4110473..... 71, 89, 91
4150512..... 477
4220238..... 39, 41
4340962..... 153
4341041..... 423
4341074..... 303
4341154..... 351, 353
4341156..... 351, 353
4360569..... 313
4360609..... 561
4400473..... 131, 135
4460019..... 575
4460256..... 575
4460419..... 573
4460458..... 571
4460464..... 575
4460465..... 573
4460466..... 571, 573
4460518..... 571
4460590..... 571
4460842..... 569
4460891..... 571
4460897..... 575
4460933..... 573
4460970..... 571
4460994..... 575, 577
4461070..... 571
4461270..... 531
4520319..... 297
4520405..... 295
4520407..... 295
4520412..... 297
4520413..... 297
4520466..... 299
4520467..... 299
4520469..... 299
4520652..... 295
4520653..... 295
4640438..... 515
4641316..... 415
4641501..... 91
4641502..... 91
4711400..... 98, 351, 353, 530, 541, 565
4711500..... 351, 353
4711600 33, 37, 121, 335, 351, 353, 425, 530, 586
4712000..... 121
4740274..... 141
4740275..... 335
4751400..... 97, 303, 319
4751500..... 141
4751600..... 141
4761400..... 351, 353
4761500..... 351, 353
4761600 ... 121, 351, 353, 375, 425, 530
4761800..... 373, 375
4811900..... 335
4812000.... 121, 425, 530
4832000..... 25, 336, 530
4832100..... 29, 121, 530, 541
4846452..... 97
4891800..... 69
4922986..... 535
4923054..... 545
4923214..... 527, 609
4923215..... 527, 609
4923216..... 537
4923225..... 538, 609
4923263..... 561
4923266..... 561
4923344..... 351
4923359..... 535
4923361..... 561
4923604..... 549
5200810..... 121
5201010..... 141
5201012..... 153, 155
5221000.... 141, 153, 155
6040500..... 61
6040600..... 61
6040700..... 61
6604662..... 71, 73
6608621..... 71
6611172 ... 525, 527, 531, 543, 545, 549
6620731..... 33, 37
6621412.... 533, 535, 538
6623576..... 29
6623749..... 131, 615
6623864..... 321
70000656..... 289
70010239..... 615
70010240..... 615
70010241..... 614
70010243..... 615
70010244..... 615
70010245..... 615
70010281..... 615
70010282.....615
70010283.....615
70010284.....615
70010285.....615
70020036.....291
70020310.....439, 613
70020348..125, 127, 129, 612
70020349..125, 127, 129, 612
70020350...125, 127, 129
70020351...125, 127, 129
70020352...125, 127, 614
70020354.....291
70020355.....291
70020358.....125
70020367.....117
70020408.....190, 238
70020409.....190, 238
70020413.....195, 233
70020428...517, 603, 605
70020483.....190, 238
70020484.....190, 238
70020485.....190, 238
70020486.....190, 238
70020487.....190, 238
70020493.....291
70020551.....351, 353
70020555.....93
70020562.....105
70021111.....233
70021227.....269
70021228.....269
70021268.....269
70021269.....269
70021342.....83, 105
70021349.....79, 83
70021358.....105
70021359.....105
70021360.....105
70021361.....105
70021362.....105
70021364.....105
70021365.....105
70021366.....105
70021367.....105
70021387.....79, 105
70021391.....105
70021392.....105
70021393.....519
70021399.....105
70021415.....83
70021440.....519
70021444.....519
70021446.....519
70021447.....519
70021448.....519
70021451.....519
70021452.....519
70021464.....519
70021465.....519
70021466.....519
70021495.....183, 233
70021526.....257
70021553..201, 207, 245, 249

70021554 . 201, 207, 245, 249
70021555 209
70021568 ..... 183, 233
70021569 ..... 183, 233
70021570 ..... 183, 233
70021571 ..... 183, 233
70021573 81
70021599 ..... 131, 135
70021617 ..... 183, 233
70021726 ..... 183, 233
70021789 ..... 205, 207
70021790 ..... 205, 207
70021812 ..... 517, 603
70021815 ..... 549, 558
70021826 571
70021859 . 592, 593, 597, 598
70021908 515
70021920 259
70021921 ..... 79, 83
70021935 ..... 79, 83
70021948 309
70021977 ..... 79, 83
70021978 ..... 79, 83
70021979 ..... 79, 83
70021980 105
70021981 105
70021982 105
70022028 ..... 79, 83
70022038 515
70022039 515
70022040 515
70022041 515
70022042 515
70022043 515
70022044 517
70022045 517
70022046 ..... 517, 603
70022052 ..... 201, 245
70022170 ..... 207, 249
70022171 ..... 193, 241
70022172 ..... 187, 235
70022173 ..... 187, 235
70022174 ..... 187, 235
70022175 ..... 187, 235
70022176 ..... 193, 241
70022177 ..... 187, 235
70022178 ..... 187, 235
70022179 ..... 207, 249
70022180 ..... 187, 235
70022181 ..... 187, 235
70022182 ..... 187, 235
70022183 ..... 193, 241
70022184 ..... 187, 235
70022185 ..... 181, 231
70022186 ..... 193, 241
70022187 ..... 207, 249
70022188 ..... 207, 249
70022189 ..... 193, 241
70022190 ..... 193, 241
70022191 199
70022192 199
70022193 ..... 193, 241
70022194 ..... 193, 241
70022195 199
70022196 ..... 193, 241
70022197 ..... 213, 253
70022198 ..... 193, 241
70022199 199
70022200 ..... 181, 231
70022201 ..... 187, 235
70022202 199
70022203 .. 207, 249, 613
70022204 ..... 187, 235
70022205 ..... 187, 235
70022206 ..... 187, 235
70022207 ..... 213, 253
70022208 ..... 207, 249
70022209 ..... 193, 241
70022210 187
70022211 ..... 181, 231
70022213 . 168, 176, 221, 225
70022215 .. 193, 199, 241
70022216 . 167, 175, 221, 225
70022217 ..... 187, 235
70022218 ..... 207, 249
70022219 ..... 187, 235
70022220 . 168, 176, 221, 225
70022221 ..... 213, 253
70022223 ..... 207, 249
70022225 ..... 181, 231
70022226 ..... 181, 231
70022227 ..... 181, 231
70022228 ..... 181, 231
70022229 ..... 181, 231
70022230 ..... 207, 249
70022232 167
70022233 ..... 213, 253
70022234 ..... 207, 249
70022235 ..... 193, 241
70022236 ..... 193, 241
70022237 ..... 207, 249
70022238 ..... 207, 249
70022239 ..... 213, 253
70022240 ..... 207, 249
70022241 ..... 187, 235
70022242 ..... 213, 253
70022243 ..... 213, 253
70022244 . 168, 176, 222, 226
70022245 . 168, 176, 221, 225
70022246 ..... 187, 235
70022247 ..... 187, 235
70022248 199
70022249 ..... 207, 249
70022250 ..... 193, 241
70022251 199
70022252 199
70022253 ..... 193, 241
70022254 ..... 187, 235
70022255 ..... 187, 235
70022256 ..... 213, 253
70022257 207
70022259 ..... 187, 235
70022260 181
70022261 181
70022262 ..... 181, 231
70022263 181
70022264 181
70022265 207
70022266 207
70022267 207
70022270 213
70022271 213
70022272 175
70022273 213
70022274 213
70022278 213
70022279 213
70022280 222
70022281 253
70022282 ..... 193, 241
70022283 253
70022284 231
70022285 231
70022384 449
70022527 105
70022528 79
70022529 79
70022610 ..... 184, 233
70022634 125
70022781 249
70022782 249
70022784 253
70022786 226
70022787 226
70022788 241
70022789 235
70022790 289
70022835 615
70022866 615
70022867 615
70022871 615
70022872 615
70022873 615
70022931 110
70022932 110
70022934 110
70022935 111
70022936 110
70022937 111
70022939 111
70022942 111
70022946 111
70022949 111
70022950 111
70022952 111
70022957 110
70022960 110
70022969 110
70022970 110
70022980 111
70022984 110
70022985 110
70022987 110
70022990 111
70022992 110
70022993 110
70022994 110
70022995 110
70022997 113
70022998 111
70023003 110
70023004 110
70023005 111
70023006 111
70023007 111
70023008 110
70023009 110
70023010 110
70023014 110
70023015 111
70023016 110
70023033 ..... 471, 473
70023040 319
70023041 319
70023139 319
70023172 615
70023173 615
70023174 615
70023175 615
70023287 ..... 125, 614
70023288 125
70023289 125
70023325 ..... 351, 353
70023328 447
70023400 .. 167, 222, 226
70023404 .. 235, 241, 253
70023405 249
70023443 ..... 127, 129
70023444 .. 125, 127, 129
70023474 291
70023475 291
70023476 291
70023502 291
70023503 439
70023736 ..... 127, 129
70023790 117
70023795 117
70023800 291
70023801 291
70023878 149
70023879 149
70023885 259
70023890 319
70023904 231
70023905 235
70023906 235
70023907 235
70023908 241
70023909 249
70023910 231
70023925 111
70023926 141
70023927 141
70023932 125
70023933 125
70024052 615
70024059 79
70024060 79
70024061 79
70024062 79
70024063 79
70024064 79
70024123 113
70024306 95
70024307 95
70024325 411
70024463 ..... 127, 129
70024464 .. 127, 129, 614
70024465 ..... 127, 129
70024535 113
70024536 113

PART NUMBER INDEX

70024537.....113
70024538.....113
70024539.....521
70024540.....113
70024541.....113
70024542.....113
70024543.....113
70024544.....113
70024545.....113
70024546.....113
70024547.....521
70024548.....521
70024549.....521
70024550.....113
70024551.....113
70024552.....113
70024553.....113
70024554.....113
70024555.....113
7010542.....488
7010543.....483, 487, 488
70110101.....615
7012941.....483, 487
7016603.....601
7017402.....485, 487
7017406.....485
7017496.....491
7020368.....390, 394, 398
7020369.....390, 394, 398
7024574.....517, 603, 605
7025112.....615
7025854.....614
7025856.....615
7026481.....351, 353
7026577.....291
7026578.....291
7026618.....291
7026628.....435, 439
7026629.....435
7026630.....437, 439
7026666.....117, 614
7026744.....257
7026745.....257
7026747.....257
7026748.....257
7026749.....257
7026750.....259
7026751.....259
7026752.....259
7026753.....259
7026754.....259
7026755.....259
7026756.....259
7026757.....277, 279
7026758.....261, 263, 265, 267, 269, 271, 273, 275, 277, 279, 281, 283
7026759.....261, 263, 265, 267, 269, 271, 273, 275, 277, 279, 281, 283
7026760.....261, 263, 265, 267, 269, 271, 273, 275, 277, 279, 281, 283
7026761.....261, 263, 265, 267, 269, 271, 273, 275, 277, 279, 281, 283
7026762.....281, 283
7026763..... 265, 267
7026764..... 269, 271
7026765..... 269, 271
7026766..... 269, 271
7026767..... 271
7026768..... 271
7026769... 257, 269, 271, 291
7026770..... 273, 275
7026771..... 257
7026772..... 257
7026773..... 285
7026774..... 257
7026775..... 257
7026776..... 287
7026777..... 287
7026778..... 287
7026779..... 287
7026780..... 287
7026781..... 287
7026782..... 285
7026783..... 285
7026784..... 285
7026785..... 289
7026786..... 289
7026787..... 289
7026788..... 289
7026789..... 289
7026790..... 289
7026791..... 285
7026792..... 285
7026793..... 285
7026794..... 259, 285
7026798..... 319
7026799..... 319
7026900..... 319
7026901..... 319
7026902..... 319
7026905..... 319
7026906..... 319
7027211.... 183, 233, 613
7027212..... 195
7027217.... 187, 190, 238
7027218..... 201, 245
7027219..... 201, 245
7027220..... 201, 245
7027221..... 201, 245
7027222..... 201, 245
7027225..... 179
7027227..... 183
7027229..... 163
7027230..... 179
7027256..... 257
7027258..... 277
7027259..... 277, 281
7027260..... 281
7027261..... 261
7027264..... 265
7027266..... 269
7027267..... 269
7027268..... 273
7027270..... 291
7027271..... 291
7027272..... 291
7027273..... 291
7028738..... 323
7028783..... 117, 612
7028838..... 131
7028932..... 505, 509
7028976..... 229
7028977.... 201, 205, 245
7029081..... 139
7029104..... 196
7029186..... 473
7029195..... 473
7029196..... 473
7029267..... 287, 289
7029367..... 355
7029412..... 333
7029413..... 333
7029414..... 333
7029415..... 333
7029417..... 285
7029419.... 357, 359, 361
7029513.... 435, 439, 445
7029514..... 445
7029517..... 445
7029518.... 435, 439, 445
7029520..... 93
7029521..... 93
7029525..... 117, 614
7029532... 261, 263, 265, 267
7029533... 261, 263, 265, 267
7029692..... 83, 105
7029714..... 105
7029715..... 287, 289
7029716..... 505, 509
7029738..... 615
7029739..... 615
7029740..... 615
7029760..... 515
7029829..... 117
7029830..... 117
7029831..... 117
7029849... 261, 263, 265, 267, 269, 271, 277, 279, 281, 283
7029850... 261, 263, 265, 267, 269, 271, 277, 279, 281, 283
7029851... 261, 263, 265, 267, 269, 271, 277, 279, 281, 283
7029852... 261, 263, 265, 267, 269, 271, 277, 279, 281, 283
7029947..... 127
7029972..... 259
7029973..... 259
7029991..... 117
7057141.... 137, 139, 141
7062922..... 71, 73
7065482..... 67
7070191..... 67
7075611..... 33, 37
7077481..... 67
7077501..... 67
7077511..... 67
7083922..... 43, 45
7085411..... 67
7085501..... 67
7085552..... 47
7085571.....47
7096491.....317
7097523.....95
7110494.....71
7110694.....71
7110702.....71, 73
7110712.....71, 73
7110722.....71, 73
7110744.....59
7112523.....75
7112533.....75
7112642.....75, 77
7112704.....75
7114032.....49
7114941.....75, 77
7117204.....67
7117214.....67
7117244.....67
7117254.....67
7117264.....67
7117502.....49
7117582.....49
7118882.....47
7118892.....47, 612
7118993.....61
7120182.....39
7121422.....47
7125741.....67
7125800.....71
7125811.....537
7125861.....609
7125891.....397
7126172....33, 37, 39, 41, 43, 45, 53, 55, 612
7126182....33, 37, 39, 41, 43, 45, 53, 55, 612
7127091.....345
7128772.....61, 67
7128792.....61, 67
7129300.....75
7129441.....303
7130131.....373
7130412....495, 497, 499, 501, 503
7137142....13, 15, 19, 53, 56
7138209.....505, 509
7138361.....335, 336
7138478.....335
7138483.....335
7138658.....297
7138659.....297
7138660.....299
7138661.....299
7138740.....505, 509, 614
7138833.....355
7138836.....355
7138858.....317, 319
7138878.....545, 549
7138883.....317
7138944.....313
7138979.....51
7138986.....51
7139108....343, 345, 347, 349
7139159.....297
7139160.....297

7139161 299
7139162 299
7139165 299
7139168 297
7139325 ..... 33, 37
7139605 295
7139606 295
7139608 79
7139739 295
7139740 295
7139746 95
7139747 95
7139886 ... 13, 15, 19, 33, 37, 53, 55, 56
7139911 ..... 53, 55
7139912 55
7139913 293
7139914 293
7139915 ..... 53, 55
7139918 ..... 91, 389
7139919 151
7139951 55
7139952 55
7139956 55
7139980 .... 366, 370, 373
7150668 29
7150687 .... 592, 593, 597
7150690 592
7150695 29
7150696 29
7150702 592
7150703 592
7150706 29
7150730 ..... 593, 598
7151241 303
7151242 303
7151245 135
7151246 131
7151250 313
7151251 313
7151262 313
7151271 313
7151272 313
7151273 313
7151276 305
7151279 303
7151280 313
7151285 .... 345, 347, 349
7151313 313
7151317 303
7151322 593
7151337 313
7161200 61
7300032 ... 33, 37, 39, 41, 43, 45, 433, 435, 437, 439, 612
7300034 ... 33, 37, 39, 41, 43, 45, 53, 56, 612
7300064 .. 33, 37, 41, 612
7300076 49
7300078 49
7300080 51
7300094 47
7300095 47
7300098 39
7300099 43
7300106 51
7300111 ..... 43, 45
7300112 ..... 43, 45
7300135 343
7300136 343
7300137 343
7300143 ... 343, 345, 347, 349
7300218 ... 495, 497, 499, 501
7300226 505
7300229 505
7300260 13
7300272 139
7300275 135
7300285 ..... 145, 147
7300287 ..... 137, 139
7300288 137
7300326 303
7300327 303
7300336 545
7300337 569
7300338 561
7300339 533
7300340 565
7300341 ..... 525, 527
7300342 ..... 525, 527
7300343 ..... 525, 527
7300344 ... 531, 533, 535, 538
7300346 609
7300347 593
7300348 593
7300349 598
7300350 598
7300351 601
7300353 ..... 545, 549
7300364 ..... 23, 25
7300370 23
7300374 ..... 137, 139
7300375 ..... 137, 139
7300377 131
7300378 131
7300379 131
7300409 355
7300411 551
7300423 592
7300424 597
7300435 .... 117, 121, 159
7300439 303
7300445 159
7300446 117
7300447 117
7300448 15
7300467 ..... 401, 403
7300468 ..... 401, 403
7300469 ..... 401, 403
7300479 .... 505, 509, 614
7300484 365
7300485 ..... 365, 369
7300487 ..... 505, 509
7300490 ... 495, 497, 499, 501, 503
7300499 ..... 401, 403
7300503 ..... 19, 53
7300509 .... 433, 435, 437
7300510 ..... 131, 135
7300511 43
7300512 43
7300516 ... 33, 39, 41, 612
7300517 ..... 39, 41, 612
7300518 ..... 39, 41, 612
7300522 ..... 39, 41
7300534 ..... 13, 15
7300535 ..... 15, 609
7300536 ..... 447, 449
7300537 ..... 505, 509
7300538 ..... 505, 509
7300539 505
7300565 55
7300566 ..... 53, 55
7300567 ..... 389, 393, 397
7300572 ..... 53, 56
7300573 303
7300579 39
7300580 ..... 53, 56
7300586 405
7300587 405
7300609 23
7300613 49
7300618 .... 381, 385, 389, 393, 397
7300620 ..... 43, 45
7300622 55
7300628 581
7300630 ..... 23, 26
7300634 25
7300645 25
7300682 345
7300687 ..... 23, 25
7300704 295
7300716 ..... 53, 56
7300723 ..... 33, 37
7300726 19
7300727 19
7300732 ..... 365, 369
7300737 ..... 381, 386
7300738 ..... 381, 386
7300739 411
7300740 411
7300741 ..... 381, 386
7300742 ..... 389, 393, 397
7300743 ..... 390, 393, 397
7300744 ..... 381, 386
7300745 ..... 390, 393, 397
7300746 ..... 390, 393, 397
7300750 .... 378, 381, 385, 389, 393, 397
7300753 19
7300754 ..... 13, 15, 19
7300757 377
7300778 ..... 366, 370, 374
7300793 303
7300805 41
7300816 45
7300829 ..... 43, 45
7300853 ..... 533, 535, 537
7300859 19
7300886 439
7300899 45
7300911 49
7300912 51
7300927 .... 381, 385, 389, 393, 397
7300943 25
7300944 411
7300945 377
7300946 411
7300947 377
7300948 ..... 401, 403
7300949 ..... 401, 403
7300950 33
7300955 55
7300966 37
7300969 ..... 365, 369
7300970 51
7300973 ..... 41, 45, 612
7300983 67
7300987 511
7300998 365
7300999 378
7301001-OM 378
7301002 415
7301003 415
7301004 415
7301005 415
7301013 511
7301030 366
7301033 ..... 53, 55
7301040 79
7301054 297
7301055 295
7301056 299
7301066 343
7301072 ..... 389, 393
7301076 .... 131, 135, 614
7301093 503
7301096 ..... 13, 15
7301097 19
7301098 ..... 13, 15
7301099 439
7301102 ..... 53, 56
7301146 19
7301147 .... 543, 545, 549
7301149 ..... 13, 15, 19
7301154 ..... 389, 393
7301165 .... 151, 153, 155
7301171 331
7301175 33
7301178 85
7301179 81
7301180 103
7301183 37
7301191 81
7301198 55
7301199 55
7301222 19
7301225 592
7301229 592
7301230 592
7301233 592
7301236 597
7301237 597
7301238 ..... 592, 597
7301253 43
7301257 45
7301259 333
7301260 551
7301261 ..... 333, 551
7301262 335
7301264 335
7301265 551

PART NUMBER INDEX

7301273.....339
7301279.....313
7301289.....85
7301294.....89
7301295.....91
7301301.....389, 393, 477
7301302.....335
7301308.....53
7301309.....56
7301311.....29
7301312.....23, 25
7301313.....55
7301318.....592
7301319.....593, 597
7301320.....592
7301321.....592
7301322.....593, 597
7301323.....592
7301324.....592, 593, 597, 598
7301325.....592
7301326.....329
7301327.....593
7301328.....593
7301341.....592, 593, 597, 598
7301342.....592, 593, 597, 598
7301343.....592, 593, 597, 598
7301345.....592, 597
7301346.....592, 593, 597
7301370.....25
7301371.....23, 25
7301372.....23, 25
7301373.....23, 25
7301379.....581, 586
7301380.....581, 586
7301382.....374
7301383.....582
7301384.....582
7301392.....349
7301393.....349
7301394.....349
7301408.....89, 91, 95
7301412.....537
7301413.....349
7301434.....333
7301438.....381, 390, 394, 398
7301441.....335
7301442.....335
7301443.....335
7301444.....335
7301446.....351
7301448.....537, 609
7301449.....538, 609
7301450.....537, 609
7301457.....339
7301458.....339
7301476.....339
7301478.....339
7301479.....339
7301495.....581
7301516.....15
7301526.....25
7301527.....25
7301529.....530, 537, 561
7301533.....39, 41
7301535.....39, 41
7301536.....389, 393, 397
7301538.....409
7301568.....91
7301569.....89, 91
7301578.....89
7301579.....89, 91
7301586.....581
7301600.....543
7301605.....495
7301641.....389, 393, 397
7301642.....389, 393, 397
7301657.....339
7301658.....339
7301659.....339
7301660.....339
7301662.....381, 390, 394, 398
7301663.....381, 390, 394, 398
7301666.....381, 390, 394, 398
7301667.....381, 390, 394, 398
7301670.....307
7301671.....309
7301718.....103
7301726.....89
7301730.....305
7301731.....305
7301745.....403
7301747.....321
7301756.....41
7301757.....41
7301762.....313
7301772.....365, 369
7301783.....335
7301808.....361
7301809.....361
7301810.....361
7301811.....309
7301812.....309
7301813.....335
7301815.....335
7301831.....477
7301843.....369, 374, 477
7301845.....295
7301868.....19
7301873.....370
7301874.....370
7301881.....335
7301893.....525, 527, 609
7301998.....593, 598
7302032.....397
7302064.....33
7302065.....37
7302113.....398
7302114.....386
7302197.....375
7302331.....347
7310012.....117, 531, 535
77133136.....423
77133137.....423
77373058.....561
77383377.....541
8024036.....201, 205
8024037.....118, 612
8024038.....117, 612
8024044.....118, 612
8024045.....382, 390, 394, 398
8024049.....118, 612
8024061.....433
8024062.....437
8025655.....603, 605
80263012.....97
80264082.....321
80304082.168, 176, 221, 225
80304088.167, 175, 221, 225
80304089.167, 175, 221, 225
80304090.167, 175, 221, 225
80304091.167, 175, 221, 225
80304092.167, 175, 221, 225
80304093.167, 175, 221, 225
80304094.167, 175, 221, 225
80304095.167, 175, 221, 225
80304096.167, 175, 221, 225
80304097.168, 176, 221, 225
80304099.168, 176, 221, 225
80304100.168, 176, 221, 225
80304101.168, 176, 221, 225
80304102.168, 176, 222, 225
80304104.168, 176, 221, 225
80304107.168, 176, 221, 225
80304108.168, 176, 221, 225
80304110.167, 175, 221, 225
80304111.167, 175, 221, 225
80304112.167, 175, 221, 225
80304113.167, 175, 221, 225
80304115.167, 175, 221, 225
80304117.167, 175, 221, 225
80304118.167, 175, 221, 225
80304119.167, 175, 221, 225
80304120.167, 175, 221, 225
80304121..168, 176, 221, 225
80304122..168, 176, 221, 225
80304123..168, 176, 221, 225
80304124..167, 175, 221, 225
80304125..168, 176, 221, 225
80304126..168, 176, 221, 225
80304127..168, 176, 221, 225
80304128..168, 176, 221, 225
80304129..168, 176, 221, 225
80304130..168, 176, 221, 225
80304131..168, 176, 221, 225
80304132..168, 176, 221, 225
80304133..168, 176, 221, 225
80304134..168, 176, 221, 225
80304135..168, 176, 221, 225
80304136..168, 176, 221, 225
80304137..168, 176, 221, 225
80304143..167, 175, 222, 226
80304144..167, 175, 222, 226
80304145..167, 175, 222, 226
80304146..167, 175, 222, 226
80304147..167, 175, 222, 226
80304148..167, 175, 222, 226
80304149..167, 175, 222, 226
80304150..167, 175, 222, 226
80304151..167, 175, 222, 226
80304152..167, 175, 222, 226
80304153..167, 175, 222, 226
80304154..167, 175, 222, 226
80304155..167, 175, 222, 226
80304156..167, 175, 222, 226
80304157..167, 175, 222, 226
80304158..167, 175, 222, 226

80304159 . 167, 175, 222, 226
80304160 . 167, 175, 222, 225
80304161 . 167, 175, 222, 226
80304162 . 167, 175, 222, 226
80304163 . 167, 175, 222, 226
80304164 . 167, 175, 222, 226
80304165 . 167, 175, 222, 226
80304166 . 167, 175, 222, 226
80304167 . 167, 175, 222, 226
80304168 . 167, 175, 222, 226
80304169 . 167, 175, 222, 226
80304173 . 201, 205, 207, 246, 249, 613
80304227 .. 211, 269, 271
80304394 .. 257, 259, 285
80304405 . 201, 205, 245, 257
80304462 ..... 193, 241
80304480 614
80304484 614
80304486 615
80304492 615
80304497 615
80304498 615
8032994 491
8033075 ..... 325, 327
8033769 487
8033786 .... 517, 603, 605
8034798 321
8034800 321
8034801 321
8034803 321
8034804 321
8034805 ..... 321, 327
8034807 327
8034808 321
8034811 321
8034815 325
8035308 441
8035309 441
8035315 ... 433, 435, 437, 439
8035321 ..... 447, 449
8035322 ... 447, 451, 455, 457, 461, 467
8035323 ... 447, 451, 455, 457, 461
8035324 447
8035326 ..... 447, 613
8035327 ..... 447, 449
8035329 463
8035330 463
8035332 ..... 463, 614
8035392 325
8035393 325
8035410 325
8035416 321
8035439 309
8035441 309
8035445 309
8035475 321
8035477 ..... 309, 321
8035478 321
8035479 321
8035486 321
8035490 .... 305, 307, 323
8035493 327
8035498 327
8035499 327
8035506 321
8035509 321
8035511 321
8035523 ... 305, 307, 309, 323
8035536 ..... 517, 603
8035547 465
8035631 309
8035632 309
8035637 309
8035639 309
8035640 ..... 307, 323
8035659 310
8035757 ... 451, 453, 455, 491
8035781 491
8035782 491
8035784 491
8035785 ... 441, 443, 445, 451, 453, 455, 491
8035830 ..... 603, 614
8035831 ..... 607, 614
8035855 ..... 477, 481
8035861 603
8035862 ..... 517, 603
8035863 ..... 517, 603
8035864 603
8035865 607
8035866 607
8035867 607
8035868 607
8035871 171
8035872 171
8035873 171
8035874 171
8035875 171
8035876 171
8035877 171
8035878 171
8035879 171
8035881 171
8035882 171
8035883 171
8035884 171
8035885 171
8035886 171
8035887 171
8035888 171
8035889 171
8035890 171
8035891 171
8035892 171
8035893 171
8035894 171
8035895 171
8035896 171
8035897 171
8035898 171
8035899 171
8035900 171
8035901 171
8035902 171
8035903 171
8035904 171
8035905 171
8035906 171
8035907 171
8035908 171
8035909 172
8035910 172
8035911 172
8035912 172
8035913 172
8035914 172
8035915 172
8035916 172
8035917 172
8035918 172
8035919 172
8035920 172
8035921 172
8035923 ..... 179, 229
8035924 183
8035925 183
8035927 ..... 183, 233
8035933 ..... 183, 233
8035936 ..... 190, 238
8035939 ..... 190, 238
8035945 ..... 189, 237
8035946 ..... 189, 237
8035947 ..... 189, 237
8035948 ..... 189, 237
8035951 ..... 189, 237
8035958 195
8035959 205
8035960 205
8035961 205
8035962 205
8035963 205
8035964 205
8035965 205
8035966 205
8035967 205
8035968 205
8035969 205
8035970 205
8035971 205
8035972 205
8035973 ..... 201, 205, 245
8035974 205
8035977 ..... 211, 251
8035981 ..... 183, 233
8035982 ..... 163, 217
8035983 ..... 164, 217
8035984 229
8035986 233
8035987 233
8035994 ..... 201, 245
8035995 ..... 201, 245
8035996 ..... 201, 245
8035997 ..... 201, 245
8035998 ..... 183, 233
8036009 317
8036010 317
8036011 317
8036013 317
8036014 317
8036015 317
8036059 309
8036061 309
8036064 309
8036065 309
8036072 327
8036088 327
8036105 309
8036162 491
8036185 ..... 477, 481
8036209 592
8036210 592
8036212 592
8036213 592
8036214 592
8036215 592
8036216 ... 592, 593, 597, 598
8036217 ... 592, 593, 597, 598
8036218 ... 592, 593, 597, 598
8036219 592
8036221 592
8036222 592
8036229 ... 433, 437, 441, 443
8036233 ..... 437, 439
8036236 .... 441, 443, 445
8036238 ..... 443, 445
8036241 ..... 443, 445
8036242 ..... 443, 445
8036304 ..... 190, 238
8036305 ..... 190, 238
8036312 ..... 183, 233
8036313 ..... 183, 233
8036320 195
8036321 195
8036328 ..... 437, 613
8036330 ... 202, 205, 207, 245, 249
8036331 ... 183, 189, 209, 211, 233, 237, 251
8036338 ..... 201, 245
8036413 .... 202, 205, 245
8036417 183
8036418 ..... 187, 235
8036419 ..... 183, 233
8036430 183
8036431 183
8036433 293
8036434 .... 201, 205, 246
8036435 ..... 201, 246
8036436 ..... 209, 251
8036438 551
8036444 ..... 189, 237
8036445 ..... 189, 237
8036447 ... 189, 193, 237, 241
8036451 607
8036456 487

PART NUMBER INDEX

8036457.....487
8036460.....487
8036463.....551
8036474.....441, 613
8036475.....433, 435, 613
8036476.....467, 614
8036477....451, 455, 457, 461, 613, 614
8036480.....471, 473
8036481.....469, 471, 473
8036482.....471, 473
8036483.....469, 471, 473
8036484.....469, 471, 473
8036485.....469, 471
8036493.....487
8036503.....478, 481
8036505.....477, 481
8036506.....477, 481
8036507.....477, 481
8036508.....477, 481
8036509.....477, 481
8036510.....477, 481
8036511.....477, 481
8036512.....477, 481
8036513.....469, 477, 481
8036514.....477, 481
8036515.....478, 481
8036516.....477, 481
8036517.....477, 481
8036518.....477, 481
8036519.....477, 481
8036520.....477, 481
8036521.....477, 481
8036523.....477, 481
8036524.....469
8036525.....493
8036526.....493
8036527.....493
8036528.....287, 289, 567
8036529.....287, 567
8036534.....305
8036535.....305
8036541.....469, 471, 473
8036543.....453, 613
8036547.....449, 613
8036550.....459, 614
8036551.....465, 614
8036564.....487
8036565.....487
8036566.....487
8036567.....488
8036568.....487
8036569.....487
8036570.....487
8036571.....487
8036572.....487, 488
8036573.....485, 487
8036574.....485, 487
8036575....261, 263, 265, 267, 269, 271, 273, 275, 277, 279, 281, 283
8036577.....447
8036579.....491
8036580.....491
8036581.....491
8036582.....491
8036583... 451, 453, 455, 457, 459, 461
8036584... 451, 455, 457, 461
8036585... 451, 455, 457, 461
8036586..... 467
8036587..... 467
8036588..... 467
8036589..... 467
8036590..... 433, 437
8036591..... 433
8036592..... 433, 435
8036593..... 433, 435
8036594..... 433, 435
8036596..... 441, 443
8036597..... 441
8036598..... 441
8036599..... 463, 465
8036600..... 463
8036601..... 131, 135
8036603..... 551
8036605..... 117, 612
8036606..... 233
8036610..... 202, 246
8036613..... 357
8036614..... 357
8036615..... 357
8036616..... 357
8036617..... 357
8036618..... 357
8036619..... 357
8036620.... 357, 359, 361
8036621..... 359
8036622..... 359
8036623..... 359
8036624..... 359, 361
8036625..... 359
8036626..... 317
8036627..... 505
8036629..... 449
8036630..... 449
8036631..... 449
8036632..... 449
8036633..... 453, 459
8036634..... 453, 459
8036635..... 453, 459
8036636..... 453, 459
8036638..... 437, 439
8036639..... 437, 439
8036640..... 443, 445
8036641..... 465
8036642..... 465
8036643..... 465
8036644.... 443, 445, 613
8036647..... 485
8036648..... 485
8036649..... 485
8036650..... 485
8036651..... 485
8036652..... 485
8036654..... 307
8036655..... 307, 323
8036656..... 309, 325
8036657..... 325
8036658..... 305, 307
8036659..... 305, 307
8036660..... 305, 307
8036662..... 325
8036663..... 305, 307
8036664..... 307
8036665..... 307
8036666..... 305, 307
8036667..... 305, 307
8036668..... 325
8036669..... 325
8036670..... 325
8036672..... 321
8036673..... 321
8036674..... 321
8036675..... 321
8036676..... 321
8036677..... 327
8036678..... 321, 327
8036679..... 327
8036680..... 327
8036681..... 327
8036682..... 327
8036684..... 309
8036685..... 309
8036687..... 309
8036688..... 309
8036689..... 309
8036690..... 309
8036691..... 309
8036692..... 309
8036693..... 309
8036694..... 310
8036695..... 309
8036696..... 309
8036699..... 309
8036700..... 309
8036701..... 309
8036702..... 309
8036703..... 309
8036704..... 309
8036705..... 309
8036706..... 309
8036707..... 309
8036709..... 309
8036710..... 309
8036711..... 309
8036712..... 309
8036714..... 321
8036716..... 321
8036717..... 321
8036718..... 321
8036719..... 321
8036720..... 305
8036721..... 305
8036722..... 305
8036723..... 333
8036724..... 333
8036725..... 333
8036726..... 333
8036727..... 333
8036729..... 321
8036733..... 89, 91
8036734..... 321
8036739... 451, 453, 455, 491
8036740..... 491
8036750.... 447, 449, 607
8036751..... 218
8036752.....229
8036753.....179, 229
8036756.....183, 233
8036757.....183, 233
8036758....183, 187, 233, 235
8036759....183, 187, 233, 235
8036761.....321, 327
8036783.....605, 614
8036787.....481
8036805.....361
8036807.....361
8036811.....605
8036817.....605
8036819.....605
8036820.....605
8036821.....605
8036830.....605
8036831.....491
8036832.....491
8036841.....171
8036846.....189, 237
8036847.....193, 241, 259
8036848.....195
8036849.....195
8036852.....195
8036854.....195
8036855.....195
8036856.....196
8036859.....195
8036861.....195
8036862.....195
8036866.....205
8036868.....145, 147
8036869.....145, 147
8037080.....463
8037204.....305, 307
80383410.....351, 353
80384398.....125
8040283.....161
8040284.....215
8040286.....161
8040287.....215
8050001.....13, 15, 19, 53
805001.....56
8050085.....53, 56
8050086.....53, 55
80604017.....575
80604018.....571
8065062.....71, 73
8065634.....67
80673023.....122, 141
80683217.....333
80904003.....614
8160102.....345, 613
8160103.....347, 613
8180210.....137, 139
8180215.....137, 139
8180216.....137, 139
8180219.....137
8180311.....137, 139
8180320.....137, 139
8180324.....137, 139
8180325.....137, 139
8180326.....137, 139
8180327.....137, 139

8180329 ..... 137, 139
8180330 ..... 137, 139
8180332 ..... 137, 139
8205655 517
8205656 ... 433, 437, 441, 443
8205657 .... 433, 435, 439
8220077 569
8220089 571
8220103 569
8220115 531
8220116 531
8220158 569
8220164 531
8220357 ... 537, 543, 545, 593, 609
8220360 .... 543, 545, 549
8220362 .... 543, 545, 554
8220363 .... 543, 545, 593
8220364 ..... 537, 609
8220366 ..... 537, 609
8220553 537
8220888 335
8220891 571
8220898 571
8220914 569
8220935 571
8220936 571
8220937 569
8220960 571
8223019 593
8223038 601
8223040 551
8223043 551
8223044 551
8223050 543
8223054 .... 543, 545, 549
8223060 593
8223071 .... 543, 545, 549
8223072 ... 543, 545, 549, 613
8223073 593
8223074 313
8223075 313
8223080 ..... 593, 598
8223081 .... 349, 351, 353
8223232 561
8223238 343
8223240 .... 505, 509, 561
8223241 .... 543, 545, 549
8223246 .... 121, 562, 614
8223526 ..... 505, 509
8223527 ..... 145, 147
8223531 335
8225119 ... 545, 549, 554, 558, 593, 598, 601
8225122 .... 537, 541, 609
8226234 .... 537, 554, 558
8229233 .... 554, 558, 593
8229234 .... 554, 558, 601
8229235 .... 554, 558, 593
8229236 598
8229237 .... 554, 558, 593
8229238 ... 554, 558, 593, 598, 601
8229243 .... 537, 554, 558
8229247 ..... 575, 577
8229259 ... 537, 554, 558, 609
8229260 ..... 537, 609
8229262 ..... 554, 558
8229263 554
8262161 117
8262162 117
8262167 117
8270144 .... 525, 527, 609
8270145 .... 525, 527, 609
8270146 .... 525, 527, 609
8270147 ... 525, 527, 530, 531, 609
8270148 ... 525, 527, 530, 531, 609
8270224 117
8270422 609
8270423 609
8270424 609
8270425 609
8270426 609
8270427 ..... 581, 609
8270621 ..... 565, 614
8270627 .... 543, 545, 549
8270628 ..... 554, 593
8272031 ..... 117, 612
8273029 ..... 145, 147
8274022 131
8275042 151
8275044 151
8275212 .... 365, 369, 373
8275240 ..... 151, 153
8275247 ..... 153, 155
8276019 335
8277172 ..... 23, 26
8278020 ..... 137, 139
8278040 ..... 117, 159
8278041 303
8301453 ... 495, 497, 499, 501, 503
8301456 75
8302446 ..... 53, 56
8303005 349
8303097 . 37, 39, 41, 137, 139
8303107 ..... 137, 139
8303261 343
8303265 ..... 43, 45
8303515 ..... 131, 135
8303519 ... 135, 495, 497, 499, 501, 503
8303528 ... 131, 145, 147, 333, 366, 370, 374, 385, 397, 533, 535, 537, 561, 567
8303531 ..... 53, 55
8303533 ... 533, 535, 537, 538, 561
8303541 .... 401, 403, 495
8303544 ... 313, 335, 401, 403, 415, 417, 419, 537, 609
8303545 ... 533, 535, 537, 541, 609
8303550 ... 131, 365, 369, 373, 378, 381, 389, 393, 397, 427, 477
8303551 .... 33, 37, 39, 41, 43, 45, 151, 153, 155
8303606 43, 45, 137, 139, 333, 495, 497, 501, 503, 592, 593, 597, 598
8303607 ..... 313, 421, 593
8303611 33, 37, 137, 139, 405, 499
8303618 ..... 51, 131
8303621 355
8303624 ..... 345, 349
8303625 29
8303626 .. 29, 75, 77, 365, 369
8303634 .... 61, 67, 71, 73, 89, 91
8303656 137
8303658 ..... 89, 91
8303670 335
8303674 317
8303675 .... 329, 365, 369, 374
8303681 329
8303703 ..... 366, 370, 373
8303715 ..... 71, 73, 309
8303739 ..... 67, 343
8303743 89
8303753 41
8303755 ..... 13, 15, 39
8303769 ..... 41, 159, 593, 598
8303770 67
8303777 .... 23, 25, 43, 45, 439, 533, 535, 538
8303778 ..... 45, 53, 56
8303783 39, 41, 313, 317, 319, 389, 393, 495, 497, 499, 501, 503, 511
8303784 .... 23, 25, 39, 43, 45, 365, 369, 433, 435, 437, 593, 597
8303785 .... 347, 433, 435, 437, 439
8303790 ..... 49, 117, 121, 159, 345, 365, 369, 373
8303798 .... 39, 41, 53, 56, 137, 139, 151, 153, 155, 159, 313, 365, 369, 505, 509, 537, 561, 593, 598
8303799 ..... 331, 345
8303837 ..... 345, 347, 538
8303992 558
8305003 .... 533, 535, 537, 541, 609
8305006 ..... 533, 535, 537
8305012 ..... 75, 77
8305038 23, 26, 151, 153, 155, 345, 347, 349, 525, 527, 533, 535, 537, 561
8305043 .... 137, 139, 345, 347, 349, 389, 393, 397, 495, 497, 499, 501, 503, 511, 592, 593, 597, 598
8305044 ... 122, 343, 347, 365, 369, 533, 535, 537
8305047 ... 335, 361, 537, 565, 609
8305402 ..... 345, 347
8305624 .89, 91, 303, 349
8305626 ..... 67, 317, 319, 335
8305630 ... 39, 41, 43, 45, 137, 139, 335, 345, 347, 349
8305637 593
8305638 ... 343, 378, 381, 385, 389, 393, 397
8305643 ... 61, 67, 71, 73, 89, 91, 117, 121, 159
8305644 ..... 29, 75, 77
8305645 . 33, 37, 67, 137, 139, 329, 336, 586, 592, 597
8305646 51
8305647 ..... 33, 37
8305652 33, 37, 543, 545, 549, 565, 609
8305654 ... 13, 15, 19, 23, 25, 53, 56, 145, 147, 149, 365, 369, 373, 374, 477, 525, 527, 531, 543, 545, 549
8305655 ... 15, 19, 33, 37, 47
8305916 355
8307003 ... 533, 535, 537, 541, 609
8307004 .... 533, 535, 537
8307005 .... 366, 370, 374
8307007 ..... 75, 77
8307022 117
8307023 ... 533, 535, 537, 561
8307024 331
8307025 ..... 29, 49, 51
8307104 ... 495, 497, 499, 501, 503
8307106 .... 137, 317, 319
8307109 .... 389, 393, 397
8307110 ..... 329, 355
8307111 538
8307112 .75, 77, 345, 349
8307113 ..... 33, 37
8307202 349
8307203 . 23, 25, 67, 137, 139, 317, 319, 335
8307204 ... 378, 381, 385, 389, 393, 397
8307205 317
8307206 29
8307219 33, 37, 313, 361, 374, 415, 421, 495, 497, 499, 501, 503, 533, 535, 537, 541, 543, 545, 549, 565, 593, 609
8307220 ... 13, 15, 19, 41, 122, 131, 135, 159, 343, 347, 365, 369,

PART NUMBER INDEX

373, 433, 435, 437, 439, 533, 535, 537
8307221....13, 15, 33, 37, 39, 41, 43, 45, 53, 56, 137, 139, 313, 335, 365, 369, 433, 435, 437, 439, 505, 509, 525, 527, 533, 535, 537, 561, 609
8307222 33, 37, 137, 139, 313, 333, 343, 397, 525, 527, 531, 543, 545, 549
8307703.....51
8307904.....43, 45, 71, 73
8307912.....53, 55, 56
8307913.....53, 55, 56
8307918.....43, 45, 71, 73
8310009.....407
8310028.....389, 393, 397
8310030.....33, 370, 374, 495, 497, 499, 501, 503
8310046.....525, 527
8310053.....336
8310061.....159
8310070.....15, 609
8310085.....345, 347, 538
8310093.....43, 45
8310125.....33, 45
8310136.....309, 321
8310160.....71, 73
8310161.....71, 73
8310164..29, 33, 37, 303, 366, 370, 373
8310188.....361, 545, 549
8310194....495, 497, 499, 501, 503
8310211....495, 497, 499, 501, 503
8310217.....43, 45, 49
8310218.....53, 56, 331
8310220.....53, 55
8310246.....141
8310266.....47
8310276.....47
8310285.....303
8310288.....117, 159
8310293.....37, 378, 389, 393, 397, 411
8310302.....89, 91
8310308.....29, 303, 495, 497, 499, 501, 503
8310341.....592, 597
8310354.....41, 117
8310375.....303
8310379.....121, 159
8310382.....313
8310390....331, 361, 545, 549, 554
8310410.....349
8310414.....365
8310424....13, 15, 19, 53, 56
8310426.....15, 19, 47
8310435.....91
8310453.....343
8310476... 343, 378, 381, 385, 389, 393, 397, 412
8310491..... 23, 26
8310507... 343, 345, 347, 349
8310508... 343, 345, 347, 349
8310514..... 41
8310518..... 412
8310534..... 335
8310539..... 13, 15, 25
8310598..... 39, 41
8310600..... 39, 43
8310604... 495, 497, 499, 501, 503
8310606..... 43, 45
8310614..... 23, 26
8310617.... 145, 147, 149
8310620..... 39, 41
8310621 23, 25, 139, 151, 153, 155
8310623.... 365, 369, 373
8310625... 13, 15, 19, 43, 45, 53, 55, 56, 331, 343, 433, 435, 437, 439
8310627..... 33, 37
8310628..... 347
8310629..... 33, 37
8310630..... 33, 37
8310638... 495, 497, 499, 501, 503
8310640..... 554
8310641..... 554, 558
8310642..... 554
8310647... 525, 527, 531, 543, 545, 549
8310650... 533, 535, 537, 538, 561
8310651..... 49
8310652..... 303
8310655..... 53, 55
8310656..... 13, 15, 19
8310657... 13, 15, 19, 33, 37, 53, 55, 56
8310662..... 53, 56
8310664..... 23, 26
8310668..... 505, 509
8310671..... 159
8310672..... 159
8310683... 335, 543, 545, 549
8310686.... 33, 37, 43, 45
8310687... 537, 543, 545, 549, 565, 609
8310689..... 53, 55, 56
8310690..... 331
8310691..... 56
8310692..... 551
8310693..... 23, 25
8310695..... 347
8310700..... 47
8310702..... 319
8310703.... 389, 393, 397
8310705..... 39, 117
8310706..... 43, 45
8310707..... 43, 45
8310709..... 15, 609
8310711... 495, 497, 499, 501, 503
8310713..... 15
8310714... 374, 495, 497, 499, 501, 503
8310715.... 345, 347, 349
8310716.... 345, 347, 349
8310726..... 339
8310728..... 349
8310732..... 349
8310736..... 335
8310737..... 335
8310746..... 345, 349
8310748..... 33, 37
8320053.... 505, 509, 614
8320054..... 505, 509
8320055..... 505, 509
8320270..... 131
8320275..... 117
8320278..... 131
8321701..... 13, 15, 19
8340038..... 23, 25, 26
8342808..... 309, 614
8342813..... 23, 25, 614
83681331..... 153
83683308..... 141
8380008..... 79
8382017..... 81, 85
8405007..... 141
8405009..... 131, 135
8405104..... 137, 139
8405201..... 141
8405202..... 141
8405203..... 335
8405209.... 366, 370, 373
8405212..... 141
8405306..... 141
8405404..... 145, 147
8406105..... 567, 593
8406201..... 525, 527
8406302..... 81
8410001.... 365, 369, 373
8410007.... 145, 147, 149
8410009... 333, 365, 369, 373
8410011..... 155
8410013.... 131, 135, 141
8410021..... 147, 149
8420053... 67, 69, 71, 73, 81, 89, 91, 113, 389, 393, 397
8420055... 67, 69, 71, 73, 81, 89, 91, 113, 389, 393, 397
8420229..... 131, 135
8430032..... 377, 513
8430033..... 513
8430034..... 505
8430048..... 333
8430081.... 377, 411, 513
8430098..... 411, 513
8430099.... 365, 369, 373
8440239..... 469
8440240..... 471
8466306..... 313
8500061..... 601
8500066..... 601
8520001....13, 15, 19, 43, 45, 49, 53, 56
8520003.....51
8520013.....67, 441, 443, 445, 447, 449
8520021.....463, 465
8522007.....41
8522012.....43, 45, 49, 51
8522050....33, 37, 39, 41, 43, 45
8522051....33, 37, 39, 43, 45
8525011.....459
8526007....29, 33, 37, 39, 41, 43, 45, 47, 153, 155, 202, 205, 293, 398, 401, 403, 415, 417, 419, 433, 435, 437, 439, 605
8526011....433, 435, 437, 439, 441, 443, 445, 447, 449, 451, 453, 455, 457, 461, 463, 465, 467, 603, 605
8526035.....335
8526036.....603
8526052.....291
8526056.....291
8530030.....365, 369, 374
8530035.....365, 369, 375
8530036.....365, 369, 373
8530041.....131
8540016.....333
8540218.....333
8540231.....333
8546407.....365, 375
8551001.....145, 147
8554008.....321
8580315.....71, 73
8581036.....366, 370, 423
8584001..67, 71, 73, 325, 327, 335, 351, 353, 530, 533, 535, 538, 541, 543, 545, 549, 561, 565, 567, 594, 598, 601, 609
8584003....345, 347, 349, 389, 393, 397, 538
8584018....325, 327, 594, 598, 601
8630003.....91, 389
8630004.....409
8630005.....423
8630006.....370, 423
8630007.....423, 427
8630008.....365, 369, 375
8630009.....365, 369, 373
8630019.....159, 375
8630020....343, 345, 347, 349
8630022.....43, 45
8630026.....19, 53
8630027.....349
8640028.....67, 71, 89, 91
8640029.....67, 71, 89, 91
8640032.....67, 71, 89, 91
8640123.....365, 369, 374

8640208 .... 365, 369, 375
8640903 423
8642001 67
8642207 ..... 71, 73
8642235 67
8642236 ..... 49, 51
8660016 335
8660017 335
8700125 343
8700126 .... 345, 347, 349
8702162 ..... 23, 25
8702163 23
8702164 ..... 23, 25
8720017 543
8721032 411
8742009 511
8750001 .... 366, 370, 373
8750005 .... 366, 370, 373
8750017 ... 131, 345, 347, 375, 378, 381, 385, 407, 412, 533, 535, 537, 561, 567
8750018 ..... 401, 403
8750020 ..... 401, 403
8750022 ... 131, 333, 365, 366, 369, 373, 374
8750024 ... 345, 347, 366, 370, 533, 535, 537, 561, 567
8750025 ... 131, 333, 365, 366, 369, 373, 374, 375, 427, 533, 535, 537, 561, 567
8750027 ... 389, 393, 397, 407
8750037 ..... 378, 412
8750038 ... 381, 385, 407, 412
8750039 ... 333, 345, 347, 375, 533, 535, 537, 561, 567
8750040 ..... 375, 427
8750042 ..... 378, 411
8750043 ... 131, 366, 370, 374, 375, 378, 381, 385, 412, 531, 533, 535, 537, 561, 567
8750044 ..... 401, 403
8769122 .... 389, 393, 397
8769123 ... 378, 381, 385, 389, 393, 397, 411
8769126 ... 381, 385, 405, 412
8769127 .... 381, 385, 412
8769128 ... 389, 393, 397, 405, 407
8769132 ..... 71, 73
8770016 ..... 71, 73
8770085 ..... 381, 385
8770091 427
8770105 403
8770111 .... 401, 415, 417
8770112 477
8770115 ..... 394, 405
8770117 .... 381, 390, 394
8770125 390
8770127 394
8770129 ... 381, 385, 389, 393, 397
8770131 411
8770136 .... 389, 393, 397
8770140 ... 401, 415, 417, 513
8770152 390
8770154 ..... 366, 401
8770163 381
8770196 427
8770214 365
8770223 ..... 505, 509
8770282 381
8770299 ..... 381, 385
8770300 ..... 381, 385
8780031 ..... 295, 297
8780036 299
8780045 ..... 295, 297
8780048 299
8780050 299
8780264 ..... 295, 297
8786514 ..... 295, 297, 299
8786572 159
8786573 159
8841322 ..... 285, 613
88521208 141
8864057 317
8864058 317
8866266 303
8866341 ..... 137, 139
8866348 331
8866442 101
8866444 101
8866445 101
8866446 101
8866464 101
8866514 331
8866516 331
8866530 331
8866560 101
8866561 101
8866625 331
88671001 ..... 67, 69
88681311 336
8880218-OM 293
8902175 390
8902309 357
8902310 411
8902313 487
8902316 343
8902317 485
8902321 493
8902322 493
8902328 477
8902329 ..... 477, 481
8902330 359
8902335 ..... 361, 613
8902856 ..... 366, 370, 373
8902862 ..... 401, 403
8990459 614
8990461 614
8990496 614
90022230 515
90200003 . 61, 63, 65, 67, 69, 71, 73, 89, 91
90206196 .... 25, 333, 530
90206202 141
90451058 .. 61, 67, 89, 91
90551013 ..... 61, 67, 71
90554016 ..... 79, 83, 105
90554017 105
90554018 ..... 79, 105
90554020 ..... 79, 83
90554042 ..... 79, 83
90554045 519
90554054 ..... 79, 83
90554062 ..... 83, 105
90554065 105
90554076 ..... 83, 105
90554080 93
91043125 ..... 79, 111
91043126 ..... 79, 111
91044080 515
91143220 56
91403193 159
91403413 . 67, 69, 71, 73, 79, 81, 89, 91, 111, 113, 389, 393, 397
91403414 . 67, 69, 71, 73, 79, 81, 89, 91, 111, 113, 389, 393, 397
91403601 ..... 153, 155
91404298 323
91404299 ..... 582, 587
91404301 323
91513234 336
91554014 573
91554019 571
91563136 .. 505, 509, 614
91563164 319
91565094 93



8990462

JLG®

An Oshkosh Corporation Company

Corportate Office
JLG Industries, Inc.
1 JLG Drive
McConnellsburg PA. 17233-9533
USA
☎ *(717) 485-5161*
(717) 485-6417

JLG Worldwide Locations

JLG Industries (Australia)
P.O. Box 5119
11 Bolwarra Road
Port Macquarie
N.S.W. 2444
Australia
☎ +61 2 65 811111
+61 2 65 813058

JLG Latino Americana Ltda.
Rua Eng. Carlos Stevenson,
80-Suite 71
13092-310 Cam inas-SP
Brazil
☎ +55 19 3295 0407
+55 19 3295 1025

JLG Industries (UK) Ltd
Bentley House
Bentley Avenue
Middleton
Greater Manchester
M24 2GP - England
☎ +44 (0)161 654 1000
+44 (0)161 654 1001

JLG France SAS
Z.I. de Baulieu
47400 Fauillet
France
☎ +33 (0)5 53 88 31 70
+33 (0)5 53 88 31 79

JLG Deutschland GmbH
Max-Planck-Str. 21
D - 27721 Ritterhude - Ihlpohl
Germany
☎ +49 (0)421 69 350 20
+49 (0)421 69 350 45

JLG Equipment Services Ltd.
Rm 1107 Landmark North
39 Lung Sum Avenue
Sheung Shui N. T.
Hong Kong
☎ (852) 2639 5783
(852) 2639 5797

JLG Industries (Italia) s.r.l.
Via Po. 22
20010 Pregnana Milanese - MI
Italy
☎ +39 029 359 5210
+39 029 359 5845

Oshkosh-JLG Singapore
Technology Equipment Pte Ltd
29 Tuas Ave 4,
Jurong Industrial Estate
Singapore, 639379
☎ +65-6591 9030
+65-6591 9031

Oshkosh-JLG (Tianjin) Equipment
Technology, Ltd
Pudong Kerry Parkside
Room 3705
1155 Fang Dian Road
Pudong, Shanghai 201204
China
☎ +0086 21 60311575
+0086 21 60311599

Plataformas Elevadoras
JLG Iberica, S.L.
Trapadella, 2
P.I. Castellbisbal Sur
08755 Castellbisbal, Barcelona
Spain
☎ +34 93 772 4700
+34 93 771 1762

JLG Sverige AB
Enkopingsvagen 150
Box 704
SE - 176 27 Jarfalla
Sweden
☎ +46 (0)850 659 500
+46 (0)850 659 534

www.jlg.com