V270
V270 (EU)
V330
V330 (EU)

GEHL®

Form No.
917376

Revision H
05/13

Vertical Lift
Skid-Steer Loaders

PARTS MANUAL

Introduction

For your safety and continued proper operation, use only genuine GEHL® service parts. When ordering service parts, specify the correct part number, full description, quantity required, the unit model number and serial number.

The model and serial number decal for this unit is located on the right chassis upright. “Right” and “Left” are determined from a position sitting on the seat and facing forward.

Manitou Americas reserves the right to make changes or improvements in the design or construction of any part of the unit without incurring the obligation to install such changes on any previously delivered units.

NOTE: Purchase equivalent, quality tires for your loader. Contact your dealer for replacement tire information.

NOTE: Replacement batteries are not provided by the GEHL Company. For battery specifications see “Electrical-Chassis” chapter. ALL REPLACEMENT BATTERIES MUST BE PURCHASED LOCALLY.

Refer to the abbreviations table located on this page for the various fastener descriptions. Standard attaching hardware torque values are also provided on the inside back cover. **If a part requires lubrication or a nonstandard torque value, it will be specified behind the part number description in parenthesis.**

Items shown in the parts list that do not have part numbers are shown for reference purposes only and are NOT available for purchase.

Dimensions are in inches unless otherwise specified.

NOTE: The following abbreviations and symbols may be used herein:

A	Ampere
AR	As Required
ASSY	ASSY
AUX	Auxiliary
CCA	Cold Cranking Amperage
CYL	Cylinder
DH	Dual Hand
DJS	Dual Joystick
FL	Flare
FOPS	Falling Object Protective Structure
GA	Gauge
HEX	Hexagon
H/F	Hand/Foot
HF	High-Flow
HYD	Hydraulic
JIC	Joint Industrial Council
kW	Kilowatt
LBS	Pounds
M	Meter
MM (mm)	Millimeter
NA	Naturally Aspirated
N/A	Not Applicable
NEG	Negative
N•m	Newton meter
NO	Number
NPT	National Pipe Thread
NSS	Not Sold Separately
PN	Part Number
POS	Positive
PSI	Pounds per Square Inch
QTY	Quantity
REF	Reference
REQ'D	Required
ROPS	Roll Over Protective Structure
RPM	Revolutions Per Minute
SAE	Society of Automotive Engineers
SN	Serial Number
SQ	Square
ST	Straight
TB	T-Bar
TB/JS	T-Bar/Joystick
TURBO	Turbocharger
V	Volt

GEHL is a registered trademark of Manitou Americas, Inc.

TABLE OF CONTENTS

DESCRIPTION	PAGE

SECTION A: MAIN LOADER COMPONENT

Chassis (includes HVAC Completing and Heater Completing) 1
Grille and Engine Cover 21
ROPS/FOPS Structure/Interior (plus Non-HVAC, HVAC and EU Door Completing) 23
Restraint Bar 31
Seat and Seat Belt Options 35
Lift Arm 41
Attachment Bracket (includes Power-A-Tach®) 43
Wheel Drives 51
Engine 53
Air Cleaner/Exhaust 57
Radiator/Cooler 61
Hydrostatics with Drive Motors 63
Hydraulics - Chassis (includes Auxiliary Hydraulics) 67
Hydraulics - Lift Arm 79
Controls - Lift/Tilt and Traction 83
Controls - Engine 87
Electrical - Chassis 89
Electrical - ROPS/FOPS 95
Electrical - Lights 99
Electrical - Engine (includes EU Electrical Disconnect Switch) 101
Tires 107
Four-Point Lift Assembly 109
Sound Suppression 111
Decals 114

SECTION B: HYDRAULIC COMPONENTS AND HEATER/HVAC HOUSINGS

Lift Cylinder 125
Tilt Cylinder 127
Drive Motors with Parking Brake 129
Tandem Pumps 133
Gear Pumps - Single and Double 139
Self-Leveling Valve 145
Solenoid Valves - Brake, Joystick Supply and Brake Release 147
Main Control Valves 149
Proportional Valves - Three and Five Bank 151
Hydraglide™ Ride Control Manifold Valve 153
Condensor, Heater Housing and HVAC Housing Assembly 155
Lift Assist Pump and Cylinder 159
Pump - Power-A-Tach® 161
Foot Valve 162

(continued on next page)

TABLE OF CONTENTS

DESCRIPTION	PAGE

SECTION C: FILTER LISTING, KITS AND ACCESSORIES

Filter Listing, Analysis Kits and Other Available Accessories 164
811486 Backup Alarm Kit. 165
811487 Side Window Kit 166
811488 Rearview Mirror Kit. 167
811502 Cab Door Kit 168
811494 Counterweight Kit 170
811489 AM/FM Radio Kit 170
811500 Heater/Defroster Kit. 171
811277 Pre-Cleaner Kit. 177
811226 14-Pin Electrical Auxiliary Connector Kit. 178
811496 Warning Lamp Kit 179
811613 Rear Wiper Kit 180
811510 Flasher Kit 181
184130 and 50352739 Auxiliary Couplers Service Kits. 182
811537 Power-A-Tach® Kit 183
811644 Parking Brake Release Kit 185
811497 Four-Point Lift Kit 186
811625 Self-Leveling Kit 187
50850001 Counterweight Kit 188
50850048 Single-Point Lift Kit. 189
50850116 Impact-Resistant Door Kit 190

SECTION D: SCHEMATICS

Heater Schematic. 193
HVAC Schematic 195
14-Pin Electrical Auxiliary Schematic 197
Electrical Schematic - Engine 198
Rear Light Power Distribution Schematic 199
Electrical Schematic - ROPS/FOPS 200
Electrical Schematic - Chassis 201
Hydrostatic/Hydraulic Schematic - Dual Joystick Controls 203
Hydrostatic/Hydraulic Schematic - Hand and Foot Controls 204

Numerical Index 206
O-Ring Table, Coupling & Adapter Torque Table 219
Torque Specifications Table . . . . . .Inside Back Cover

SECTION A: MAIN LOADER COMPONENTS

Chassis (includes HVAC Completing and Heater Completing) 1
Grille and Engine Cover 21
ROPS/FOPS Structure/Interior (plus Non-HVAC, HVAC and EU Door Completing) . . 23
Restraint Bar 31
Seat and Seat Belt Options 35
Lift Arm 41
Attachment Bracket (includes Power-A-Tach®) 43
Wheel Drives 51
Engine 53
Air Cleaner/Exhaust 57
Radiator/Cooler 61
Hydrostatics with Drive Motors 63
Hydraulics - Chassis (includes Auxiliary Hydraulics) 67
Hydraulics - Lift Arm 79
Controls - Lift/Tilt and Traction 83
Controls - Engine 87
Electrical - Chassis 89
Electrical - ROPS/FOPS 95
Electrical - Lights 99
Electrical - Engine (includes EU Electrical Disconnect Switch) 101
Tires 107
Four-Point Lift Assembly 109
Sound Suppression 111
Decals 114

V330 Models
V270 Models - SN 021601 and Up

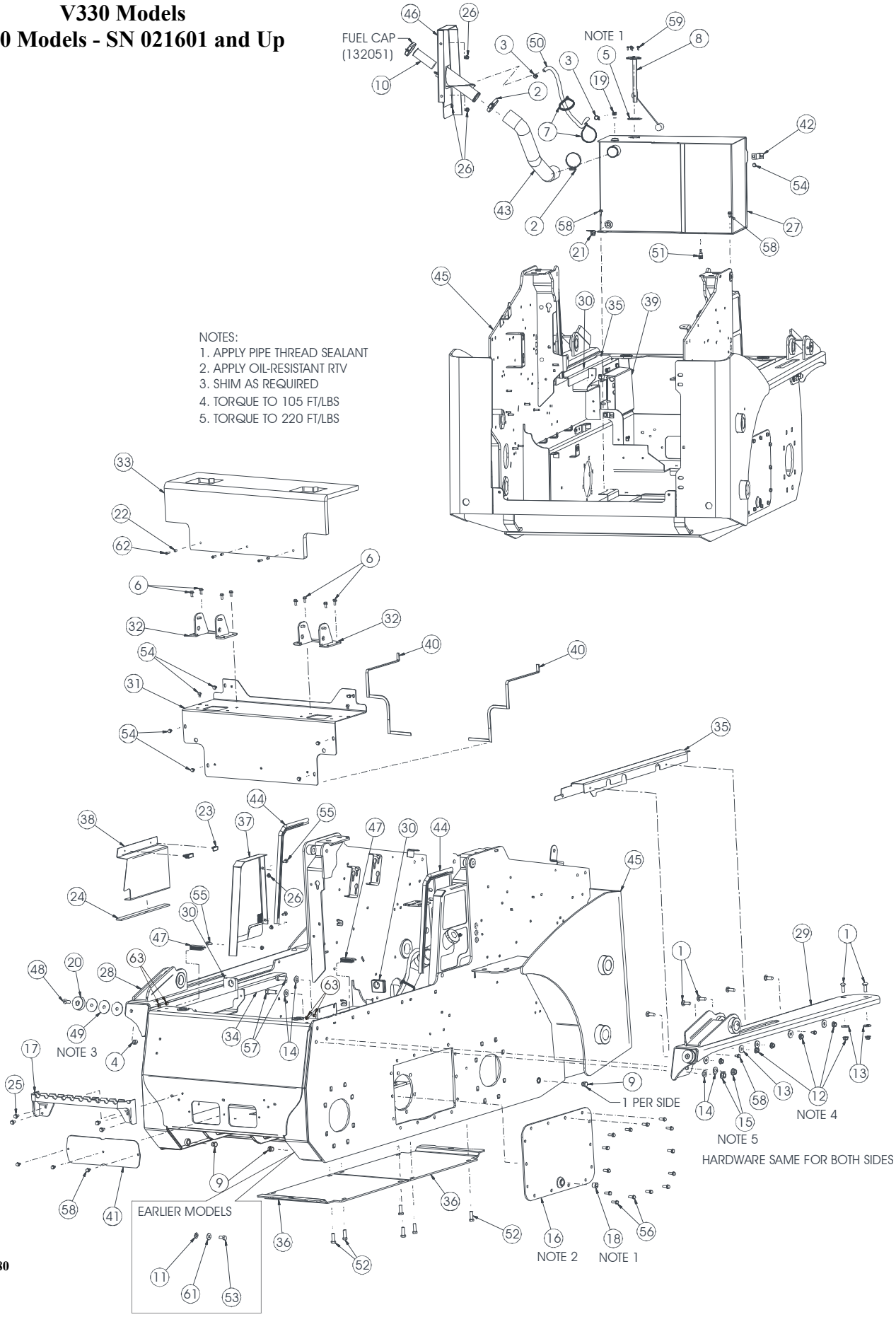

Ref. No.	Part No.	Description	Quantity
1	030-31934	BOLT/CARRIAGE 1/2 X 1-1/2	14
2	061166	CLAMP/HOSE	2
3	062023	CLAMP/HOSE #M5	2
4	071706	NUT/HEX LOCK 1/2	2
5	072343	GASKET/FUEL SENDER	1
6	081380	SCREW/CAP FLANGE LOCK 5/16 X 3/4	8
7	088467	TIE/NYLON 15-1/2	2
8	090-28749	SENDER/FUEL	1
9	131529 a	PLUG SAE08	4
10	132050	STRAINER/FUEL FILL	1
11	132298 b	WASHER/SEAL	2
12	134853	NUT/SPIRALOCK™ 1/2	14
13	134966	WASHER/FLAT HARDENED 1/2	12
14	135773	WASHER/FLAT HARDENED 5/8	8
15	136601	NUT/SPIRALOCK™ 5/8	4
16	138593	ASSEMBLY/CHAINCASE COVER	2
17	183146	STEP	1
18	184670	PLUG/PIPE SQUARE SOCKET 3/4	2
19	186080	FITTING/90º HB05 X MP04 BRASS	1
20	189144	STOP/DOWN	2
21	189709	VALVE/FUEL SHUT OFF	1
22	190400	SPACER	3
23	193706	LATCH/SWELL	4
24	194271	STRIP/FOAM 1/4 X 1-1/2 X 15-13/16	2
25	195138	SCREW/TAPPING HEX WASHER HEAD THREAD ROLL 3/8 X 3/4	4
26	210-19470	NUT/LOCK FLANGE SERRATED 5/16	6
27	240665	TANK//FUEL	1
28	240884	T-LINK FENDER/RIGHT	1
29	240887	T-LINK FENDER/LEFT	1
30	240903	PLUG/PASS THROUGH	2
31	240961	COVER/CROSSMEMBER	1
32	241169	BASE/JOYSTICK	2
33	241199	COVER/CROSSMEMBER	1
34	241233	FILLER/ROPS RIGHT	1
35	241234	FILLER/ROPS LEFT	1
36	241397	BELLY PAN	2
37	241520	COVER/RIGHT	1
38	242026	COVER/PANEL RIGHT	1
39	242046	COVER/PANEL LEFT	1
40	242500	SEAL	2
41	242675	COVER/CLEAN-OUT	1
42	242698	PLATE/RETAINER	2
43	242843	HOSE/FILL 2.00	1
44	244559	SEAL/BULB 90°	2
45	244608	CHASSIS	1
	244322	COUNTERWEIGHT/CAST (V330 ONLY)	1
46	244626	COVER/FUEL	1
	132051	CAP/FUEL TANK	1
47	245238	SEAL/FILLER PLATE	2
48	310-32585	SCREW/CAP FLAT HARDENED 1/2 X 1-1/2	2
49	360-32599	SHIM	6
50	420-34933	HOSE/FUEL 5/16 X 31	1
51	50350153	FITTING/90º HB05 X MP04	1
52	092164	SCREW/CAP HEX FLANGE LOCKING 1/2 X 1-1/4	6
53	650494 b	SCREW/CAP 1/2 X 1	2
54	650510	SCREW/TAPPING HEX WASHER HEAD THREAD CUTTING 5/16 X 1/2	10
55	650573	BOLT/CARRIAGE 5/16 X 1	6
56	651042	SCREW/MACHINE HEX WASHER HEAD 3/8 X 1	28
57	651075	SCREW/CAP 5/8 X 1-3/4	4
58	651648	SCREW/TAPPING HEX WASHER HEAD THREAD ROLL 5/16 X 3/4	9
59	651650	SCREW/TAPPING HEX WASHER HEAD THREAD ROLL #10 X 1/2	5
61	654046 b	WASHER/FLAT 7/16	2
62	L70486	SCREW/TORX DRIVE TRUSS HEAD 1/4 X 1	3
63	191826	PLUG/HOLE	4

a) Two additional plugs (#9) added to front of chassis, removing items #11, #53, and #61.
V270 Models: SN 021743 and Up, and earlier SN's: 021727 - 021736. V330 Models: SN 131083 and Up, and earlier SN's: 131078, 131080, 131081.
b) V270 Models: SN 021742 and Before (see exemptions in note a.) V330 Models: SN 131082 and Before (see exemptions in note a.)

V270 Models
SN 021600 and Before

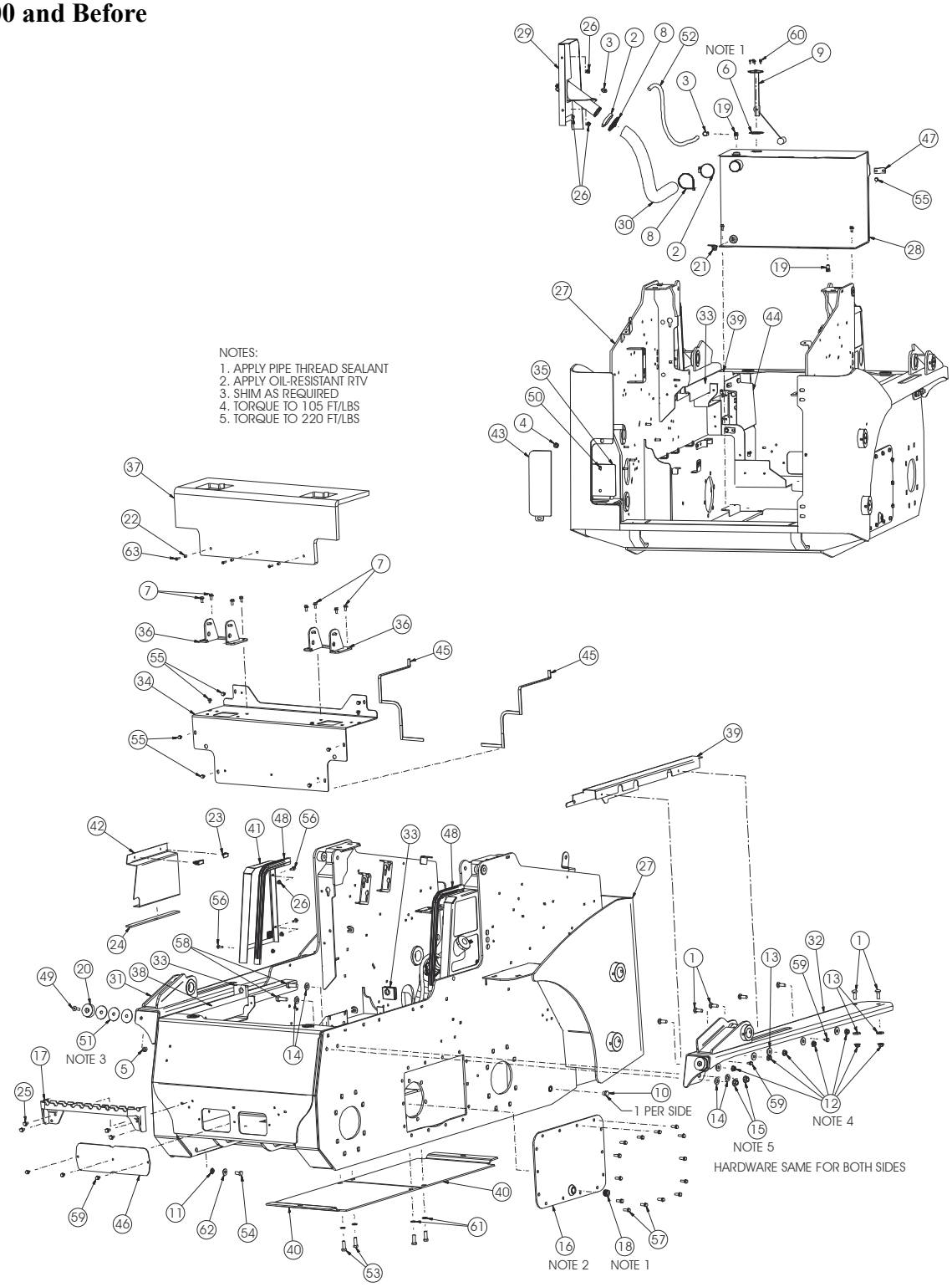

410252

Ref. No.	Part No.	Description	Quantity
1	030-31934	BOLT/CARRIAGE 1/2 X 1-1/2	14
2	061166	CLAMP/HOSE	2
3	062023	CLAMP/HOSE #M5	2
4	070856	NUT/LOCK SERRATED FLANGE 3/8	1
5	071706	NUT/HEX LOCK 1/2	2
6	072343	GASKET/FUEL SENDER	1
7	081380	SCREW/CAP FLANGE LOCK 5/16 X 3/4	8
8	088467	TIE/NYLON 15-1/2	2
9	090-28749	SENDER/FUEL	1
10	131529	PLUG SAE08	2
11	132298	WASHER/SEAL	2
12	134853	NUT/SPIRALOCK™ 1/2	14
13	134966	WASHER/FLAT HARDENED 1/2	12
14	135773	WASHER/FLAT HARDENED 5/8	8
15	136601	NUT/SPIRALOCK™ 5/8	4
16	138593	ASSEMBLY/CHAINCASE COVER	2
17	183146	STEP	1
18	184670	PLUG/PIPE SQUARE SOCKET 3/4	2
19	186080	FITTING/90° 5/16 BARB	2
20	189144	STOP/DOWN	2
21	189709	VALVE/FUEL SHUT OFF	1
22	190400	SPACER	3
23	193706	LATCH/SWELL	4
24	194271	STRIP/FOAM 1/4 X 1-1/2 X 15-13/16	2
25	195138	SCREW/TAPPING HEX WASHER HEAD THREAD ROLL 3/8 X 3/4	4
26	210-19470	NUT/LOCK FLANGE SERRATED 5/16	6
27	240616	CHASSIS	1
28	240665	TANK//FUEL	1
29	240674	COVER/FUEL	1
	132051	CAP/FUEL TANK	1
	132050	STRAINER/FUEL FILL	1
30	242843	HOSE/FUEL FILL	1
31	240884	T-LINK FENDER/RIGHT	1
32	240887	T-LINK FENDER/LEFT	1
33	240903	PLUG/PASS THROUGH	2
34	240961	COVER/CROSSMEMBER	1
35	241153	COVER/TOWER	1
36	241169	BASE/JOYSTICK	2
37	241199	COVER/CROSSMEMBER	1
38	241233	FILLER/ROPS RIGHT	1
39	241234	FILLER/ROPS LEFT	1
40	241397	BELLY PAN	2
41	241520	COVER/RIGHT	1
42	242026	COVER/PANEL RIGHT	1
43	242041	PANEL/ACCESS	1
44	242046	COVER/PANEL LEFT	1
45	242500	SEAL	2
46	242675	COVER/CLEAN-OUT	1
47	242698	PLATE/RETAINER	2
48	244559	SEAL/BULB 90°	2
49	310-32585	SCREW/CAP FLAT HARDENED 1/2 X 1-1/2	2
50	310-32626	SCREW/CAP HEXAGON SOCKET BUTTON HEAD 3/8 X 1	1
51	360-32599	SHIM	6
52	420-34933	HOSE/FUEL 5/16 X 31	1
53	650453	SCREW/CAP 1/2 X 1-1/2	4
54	650494	SCREW/CAP 1/2 X 1	2
55	650510	SCREW/TAPPING HEX WASHER HEAD THREAD CUTTING 5/16 X 1/2	10
56	650573	BOLT/CARRIAGE 5/16 X 1	6
57	651042	SCREW/MACHINE HEX WASHER HEAD 3/8 X 1	28
58	651075	SCREW/CAP 5/8 X 1-3/4	4
59	651648	SCREW/TAPPING HEX WASHER HEAD THREAD ROLL 5/16 X 3/4	9
60	651650	SCREW/TAPPING HEX WASHER HEAD THREAD ROLL #10 X 1/2	5
61	654030	WASHER/LOCK HELICAL SPRING 1/2	4
62	654046	WASHER/FLAT 7/16	2
63	L70486	SCREW/TORX DRIVE TRUSS HEAD 1/4 X 1	3

HVAC Completing

V270 Models: SN 021951 and Up
V330 Models: SN 131401 and Up

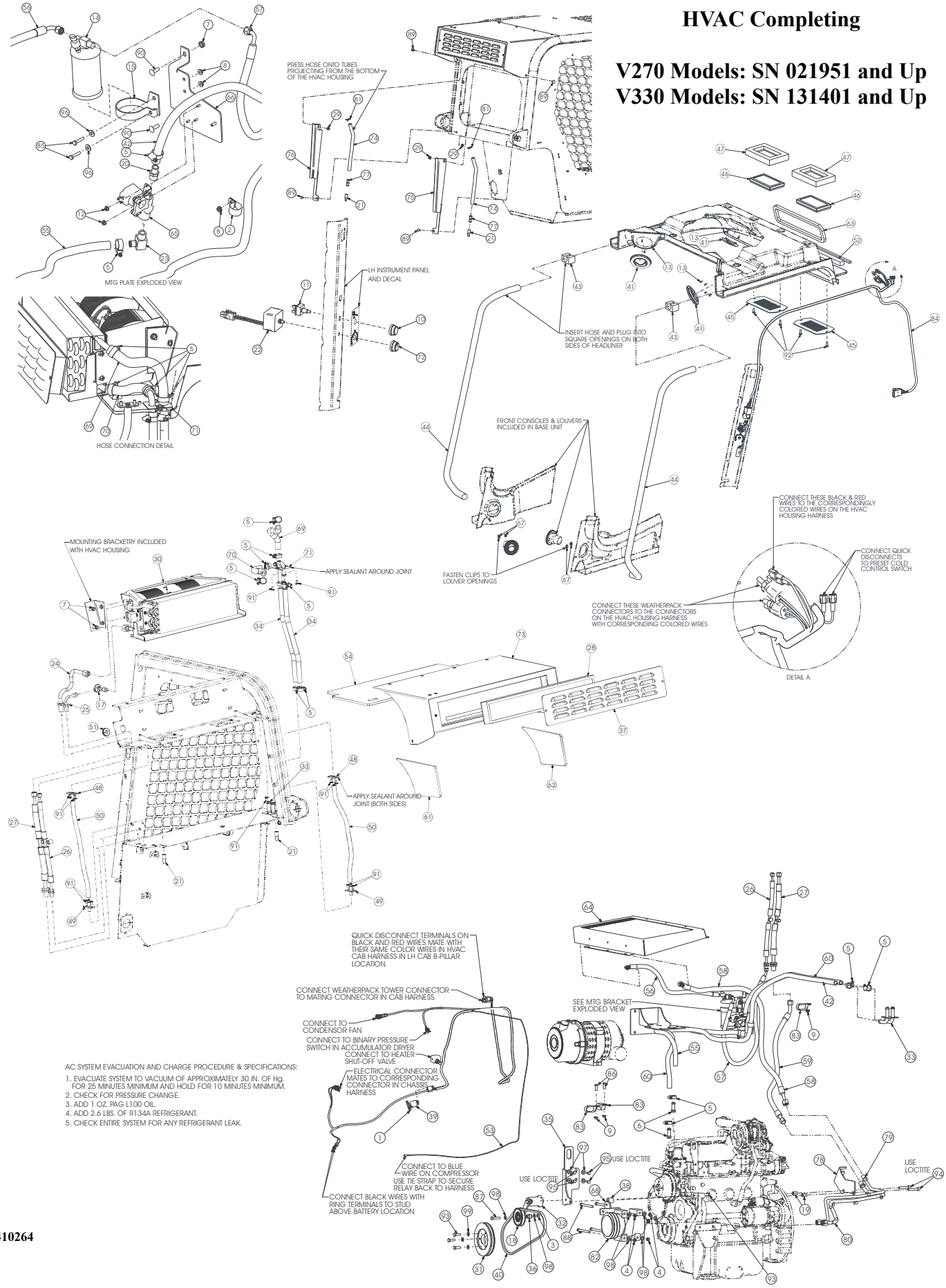

AC SYSTEM EVACUATION AND CHARGE PROCEDURE & SPECIFICATIONS:

1. EVACUATE SYSTEM TO VACUUM OF APPROXIMATELY 30 IN. OF Hg. FOR 25 MINUTES MINIMUM AND HOLD FOR 10 MINUTES MINIMUM.
2. CHECK FOR PRESSURE CHANGE.
3. ADD 1 OZ. PAG L100 OIL.
4. ADD 2.6 LBS. OF R134A REFRIGERANT.
5. CHECK ENTIRE SYSTEM FOR ANY REFRIGERANT LEAK.

410264

Ref. No.	Part No.	Description	Quantity HVAC
1	055648	TIE/CABLE 3/16 X 7-1/2	1
2	058805	CLAMP/HOSE 1-1/8 X 13/32 HOLE	1
3	071703	NUT/LOCK HEX 3/8	1
4	094762	NUT/LOCK OVAL TOP 3/8	4
5	095955	CLAMP/HOSE #10	14
6	104052	FITTING/STRAIGHT HB10-MBSPT06	2
7	131842	NUT/SPIRALOCK™ 5/16	6
8	134588	NUT/SPIRALOCK™ 1/4	3
9	134852	NUT/SPIRALOCK™ 13/8	3
10	136304	KNOB/HEATER SWITCH	1
11	136305	SWITCH/HEATER	1
12	137797	NUT/WHIZLOCK SERRATED FLANGE #10	2
13	137821	SCREW/TAPPING CROSS RECESSED COUNTERSUNK HEAD #6 X 1/2	16
14	138649	RECEIVER/DRYER/AC	1
15	138651	CLAMP/RECEIVER DRYER	1
16	138714	SWITCH/BINARY/AC	1
17	138723	VALVE/EXPANSION/AC	1
18	139952	PULLEY/VEE W/BEARING	1
19	184006	SPACER/ALARM/BRACKET	2
20	186193	FITTING/STRAIGHT 1/2 MPT X 5/8 HOSE	1
21	187030	CAP/DRIP	4
22	189033	MODULE/AC CONTROL	1
23	191351	FITTING/ELBOW 90º 1/2 NPT	1
24	195585	TUBE/AC #10	1
25	195588	TUBE/AC/#6	1
26	195605	HOSE/#6/AC	1
27	195606	HOSE/#10/AC	1
28	195660	FILTER/HVAC FRESH AIR	1
29	210-19470	NUT/LOCK FLANGE SERRATED 5/16	4
30	REFa	ASSY/MAIN HVAC HOUSING	1
31	241008	PULLEY/CRANK/AC/YANMAR	1
32	241010	TENSIONER/BELT	1
33	241208	PLATE/HEATER TUBES	1
34	241209	HOSE/HEATER	2
35	241251	BRACKET/TENSIONER	1
36	241385	SPACER/PULLEY	1
37	241486	PLATE/COVER LOUVERED	1
38	241844	SPACER/ALTERNATOR	1
39	242145	RELAY/SEALED	1
40	242274	BELT/AC	1
41	242437	VENT	4
42	242509	HOSE/HEATER	2
43	242534	PLUG/PASS-THROUGH TUBE	2
44	242537	TUBE/FORWARD HVAC	2
45	242831	COVER/RECIRC	2
46	242832	FILTER/RECIRC	2
47	242833	PAD/SEALING FILTER	2
48	242851	TUBE/DRAIN	2
49	242853	TUBE/DRAIN	2
50	242861	HOSE/DRAIN	2

a) For breakdown see “Section B” of this manual.

Parts Listing Continued On Next Page

HVAC Completing

V270 Models: SN 021951 and Up
V330 Models: SN 131401 and Up

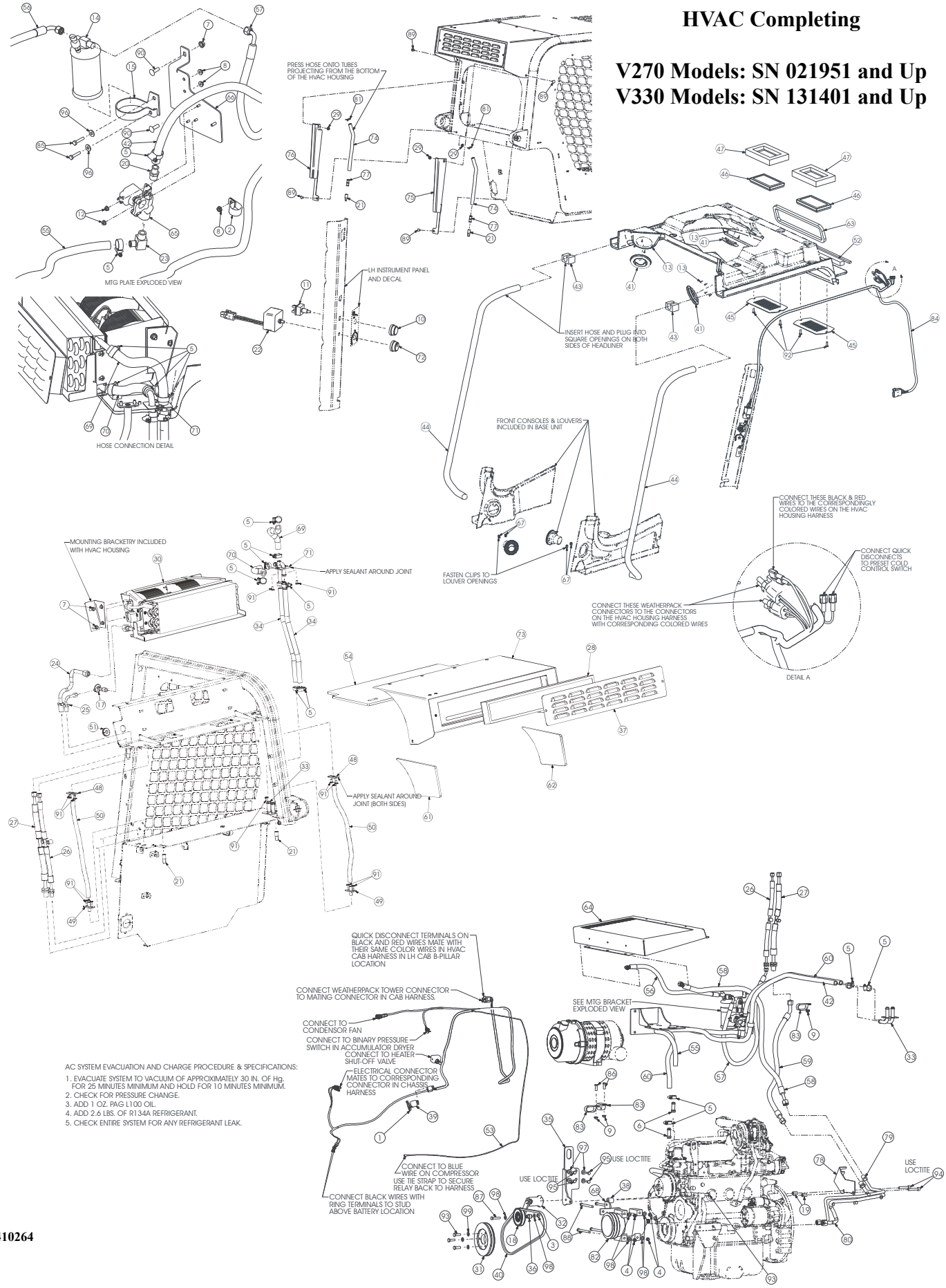

AC SYSTEM EVACUATION AND CHARGE PROCEDURE & SPECIFICATIONS:

1. EVACUATE SYSTEM TO VACUUM OF APPROXIMATELY 30 IN. OF Hg. FOR 25 MINUTES MINIMUM AND HOLD FOR 10 MINUTES MINIMUM.
2. CHECK FOR PRESSURE CHANGE.
3. ADD 1 OZ. PAG L100 OIL.
4. ADD 2.6 LBS. OF R134A REFRIGERANT.
5. CHECK ENTIRE SYSTEM FOR ANY REFRIGERANT LEAK.

410264

continued from previous page

Ref. No.	Part No.	Description	Quantity HVAC
51	242862	GROMMET/HVAC COMPT	1
52	242863	PAD/FOAM SEALING STRIP	1
53	242898	HARNESS/HVAC CHASSIS	1
54	242917	PAD/HOUSING TOP	1
55	242950	HOSE/HEATER	1
56	242971	HOSE/#6 A/C	1
57	242975	HOSE/#6 A/C	1
58	242998	HOSE/#8 A/C	1
59	243000	HOSE/#10 A/C	1
60	243008	HOSE/HEATER	1
61	243013	PAD/HOUSING LEFT	1
62	243014	PAD/HOUSING RIGHT	1
63	243017	PAD/HVAC HEADLINER SEAL	1
64	REFa	ASSY/CONDENSER	1
65	243350	VALVE/SOLENOID HTR/AC	1
66	243358	BRACKET/MOUNTING HEATER VALVE	1
67	243445	CLIP/HOSE RETAINING	4
68	243493	BRACKET/COMPRESSOR	1
69	243737	HOSE/MOLDED HEATER (SUPPLY)	1
70	243738	HOSE/MOLDED HEATER (RETURN)	1
71	243741	TUBE/HEATER	1
72	244496	KNOB/HVAC TEMP CONTROL	1
73	244681	HOUSING/HVAC	1
74	244770	TUBE/DRAIN HVAC	2
75	244813	COVER/DRAIN HVAC RIGHT	1
76	244814	COVER/DRAIN HVAC LEFT	1
77	244815	HOSE/MENDER 1/2 HOSE	2
78	245217	BRACKET/MOUNTING HVAC TUBES	1
79	245223	TUBE/HVAC HIGH PRESSURE	1
80	245224	TUBE/HVAC LOW PRESSURE	1
81	245235	CLAMP/HOSE WIRE 3/4 OD	2
82	270284	COMPRESSOR/A-C	1
83	271341	CLAMP/HOSE 1 X 13/32 HOLE	3
84	50351041	HARNESS/HVAC CAB	1
85	650426	SCREW/CAP 1/4 X 1-1/4	2
86	650490	SCREW/CAP 3/8 X 1	2
87	650579	SCREW/CAP 3/8 X 1-3/4	1
88	650851	SCREW/CAP 3/8 X 4-1/2	4
89	650969	BOLT/CARRIAGE ROUND HEAD SOCKET SQUARE NECK 5/16 X 5/8	4
90	651065	BOLT/CARRIAGE ROUND HEAD SOCKET SQUARE NECK 5/16 X 1	2
91	651307	SCREW/MACHINE PAN HEAD CROSS RECESSED 1/4 X 1/2	12
92	651308	SCREW/MACHINE PAN HEAD CROSS RECESSED 1/4 X 3/4	4
93	651395	SCREW/CAP M10 X 30 MM	4
94	651776	SCREW/CAP SOCKET HEAD M10 X 55 MM	2
95	651803	SCREW/CAP M8 X 20 MM	4
96	654002	WASHER/FLAT 1/4	2
97	654004	WASHER/FLAT 5/16	4
98	654049	WASHER/FLAT 3/8	6
99	656133	WASHER/FLAT M10	3

a) For breakdown see “Section B” of this manual.

HVAC Completing

V270 Models: SN 021347 - 021950
V330 Models: SN 131400 and Before

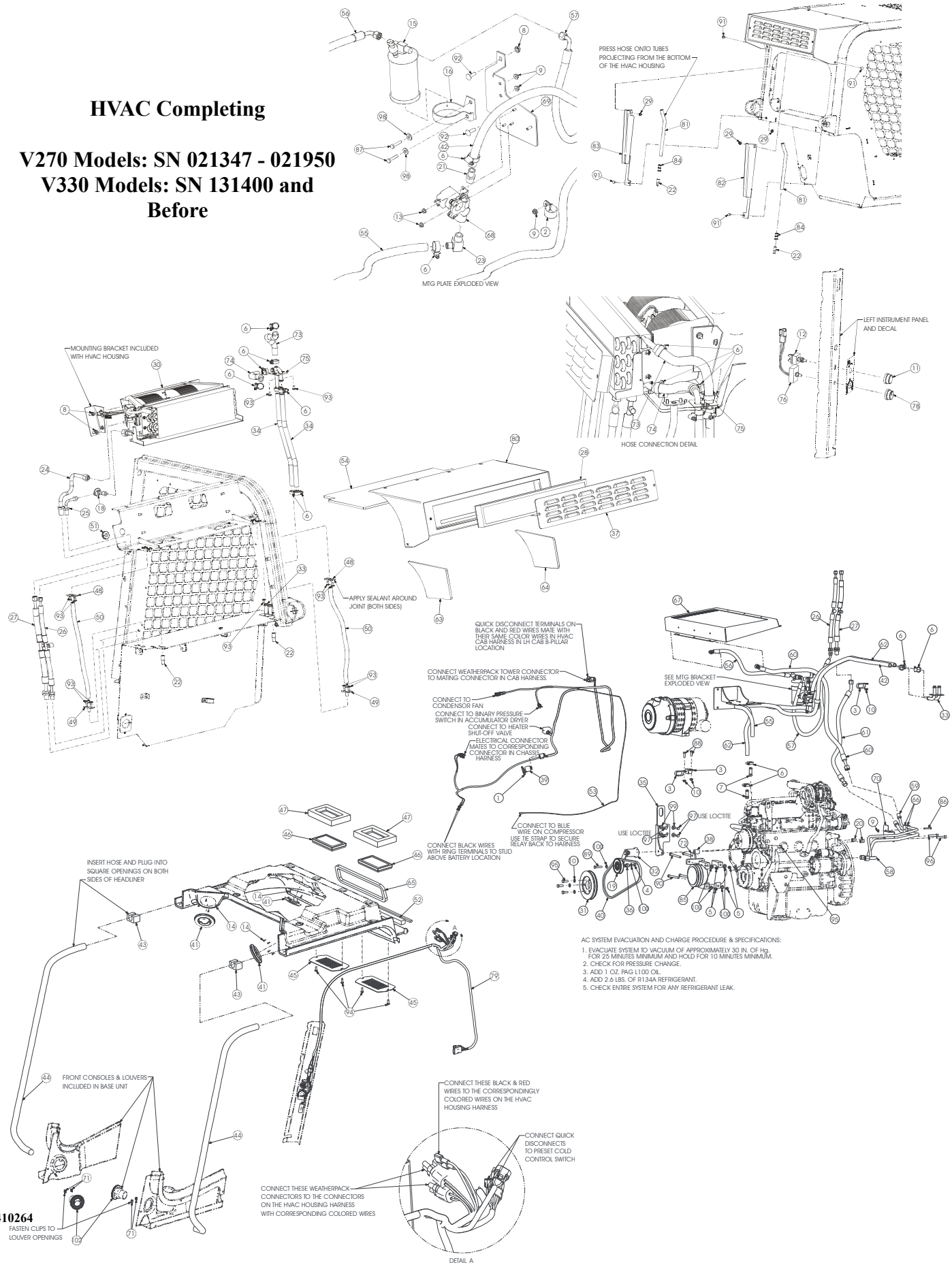

Ref. No.	Part No.	Description	Quantity HVAC
1	055648	TIE/CABLE 3/16 x 7-1/2	1
2	058805	CLAMP/HOSE 1-1/8 X 13/32 HOLE	1
3	067849	CLAMP/HOSE 7/8 X 13/32 HOLE	3
4	071703	NUT/LOCK HEX 3/8	1
5	094762	NUT/LOCK OVAL TOP 3/8	4
6	095955	CLAMP/HOSE #10	14
7	104052	FITTING/STRAIGHT HB10-MBSPT06	2
8	131842	NUT/SPIRALOCK™ 5/16	6
9	134588	NUT/SPIRALOCK™ 1/4	4
10	134852	NUT/SPIRALOCK™ 3/8	3
11	136304	KNOB/HEATER SWITCH	1
12	136305	SWITCH/HEATER	1
13	137797	NUT/WHIZLOCK SERRATED FLANGE #10	2
14	137821	SCREW/TAPPING CROSS RECESSED COUNTERSUNK HEAD #6 X 1/2	16
15	138649	RECEIVER/DRYER/AC	1
16	138651	CLAMP/RECEIVER DRYER	1
17	138714	SWITCH/BINARY/AC	1
18	138723	VALVE/EXPANSION/AC	1
19	139952	PULLEY/VEE W/BEARING	1
20	184006	SPACER/ALARM/BRACKET	2
21	186193	FITTING/STRAIGHT 1/2 MPT X 5/8 HOSE	1
22	187030	CAP/DRIP	4
23	191351	FITTING/ELBOW 90º 1/2 NPT	1
24	195585	TUBE/AC/#10	1
25	195588	TUBE/AC/#6	1
26	195605	HOSE/#6/AC	1
27	195606	HOSE/#10/AC	1
28	195660	FILTER/HVAC FRESH AIR	1
29	210-19470	NUT/LOCK FLANGE SERRATED 5/16	4
30	REFa	ASSEMBLY/HVAC HOUSING	1
31	241008	PULLEY/CRANK/AC	1
32	241010	TENSIONER/BELT	1
33	241208	PLATE/HEATER TUBE	1
34	241209	HOSE/HEATER	2
35	241251	BRACKET/TENSIONER	1
36	241385	SPACER/PULLEY	1
37	241486	PLATE/COVER LOUVERED	1
38	241844	SPACER/ALTERNATOR	1
39	242145	RELAY/SEALED	1
40	242274	BELT/AC	1
41	242437	VENT	4
42	242509	HOSE/HEATER	1
43	242534	PLUG/PASS-THROUGH TUBE	2
44	242537	TUBE/FORWARD HVAC	2
45	242831	COVER/RECIRC	2
46	242832	FILTER/RECIRC	2
47	242833	PAD/SEALING FILTER	2
48	242851	TUBE/DRAIN	2
49	242853	TUBE/DRAIN	2
50	242861	HOSE/DRAIN	2
51	242862	GROMMET/HVAC COMPT	1

a) For breakdown see “Section B” of this manual.

Parts Listing Continued On Next Page

HVAC Completing

V270 Models: SN 021347 - 021950
V330 Models: SN 131400 and Before

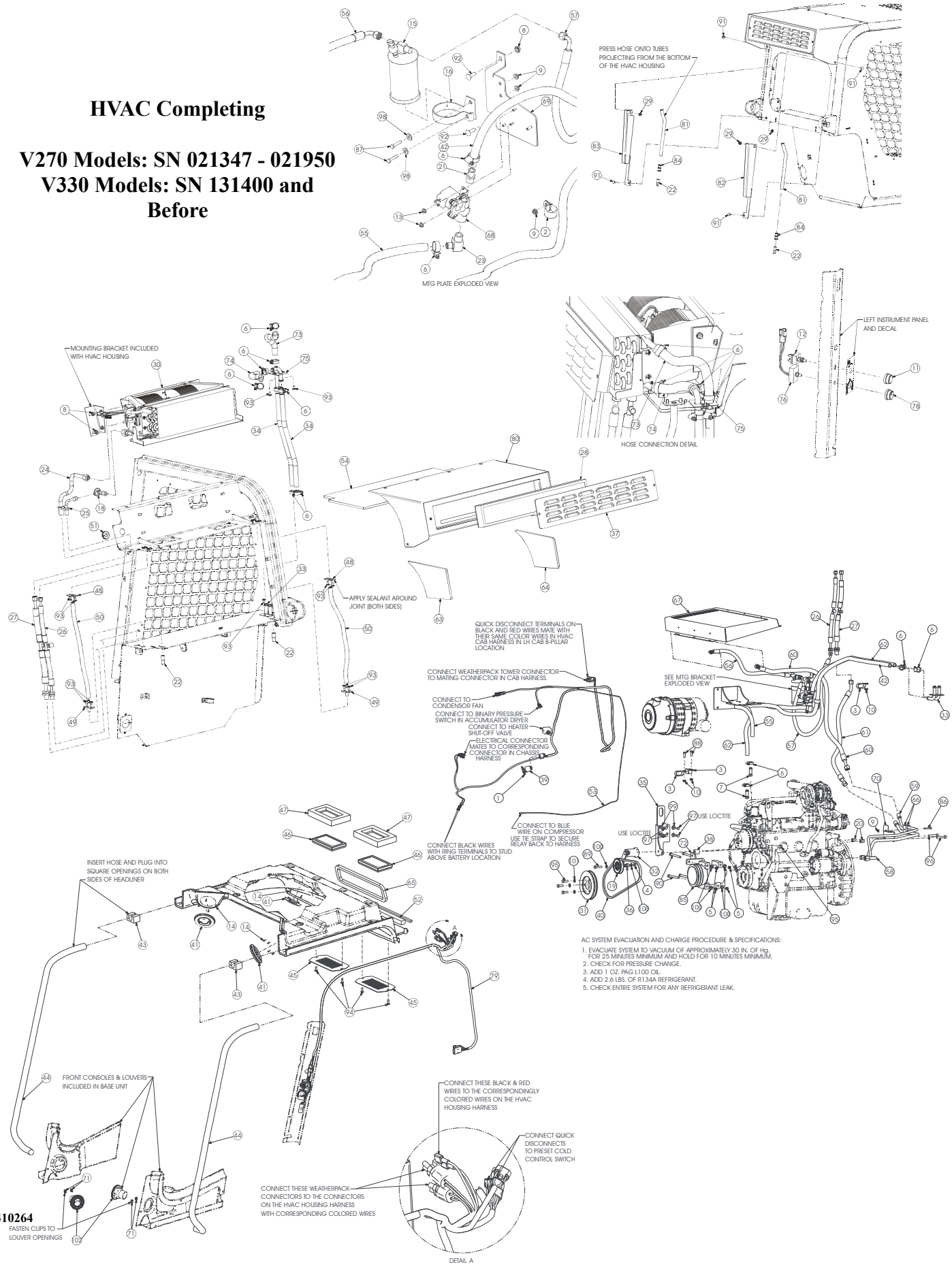

AC SYSTEM EVACUATION AND CHARGE PROCEDURE & SPECIFICATIONS:

1. EVACUATE SYSTEM TO VACUUM OF APPROXIMATELY 30 IN. OF Hg. FOR 25 MINUTES MINIMUM AND HOLD FOR 10 MINUTES MINIMUM.
2. CHECK FOR PRESSURE CHANGE.
3. ADD 1 OZ. PAG L100 OIL.
4. ADD 2.6 LBS. OF R134A REFRIGERANT.
5. CHECK ENTIRE SYSTEM FOR ANY REFRIGERANT LEAK.

continued from previous page

Ref. No.	Part No.	Description	Quantity HVAC
52	242863	PAD/FOAM SEALING STRIP	1
53	242898	HARNESS/HVAC CHASSIS	1
54	242917	PAD/HOUSING TOP	1
55	242950	HOSE/HEATER	1
56	242971	HOSE/#6 A/C	1
57	242975	HOSE/#6 A/C	1
58	242993	TUBE/A/C LOW PRESSURE	1
59	242994	TUBE/A/C HIGH PRESSURE	1
60	242998	HOSE/A/C #8	1
61	243000	HOSE/#10 A/C	1
62	243008	HOSE/HEATER	1
63	243013	PAD/HOUSING LEFT	1
64	243014	PAD/HOUSING RIGHT	1
65	243017	PAD/HVAC HEADLINER SEAL	1
66	243033	CLAMP/TUBE/TWIN/AC	2
67	REFa	ASSEMBLY/CONDENSER	1
68	243350	VALVE/SOLENOID HEATER AC	1
69	243358	BRACKET/MTG HEATER VALVE	1
	651065	BOLT/CARRIAGE SQUARE NECK 5/16 X 1 (SECURES 243358 TO CHASSIS)	2
70	243365	BRACKET/MTG AC LINES	1
71	243445	CLIP/HOSE RETAINING	4
72	243493	BRACKET/COMPRESSOR	1
73	243737	HOSE/MOLDED HEATER (SUPPLY)	1
74	243738	HOSE/MOLDED HEATER (RETURN)	1
75	243741	TUBE/HEATER	1
76	243970	POTENTIOMETER/HVAC	1
77	243973	DECAL/FAN SPD	1
78	244496	KNOB/HVAC TEMPERATURE CONTROL	1
79	244508	HARNESS/HVAC CAB	1
80	244681	HOUSING/HVAC	1
81	244770	TUBE/DRAIN HVAC	2
82	244813	COVER/DRAIN HVAC RIGHT	1
83	244814	COVER/DRAIN HVAC LEFT	1
84	244815	HOSE/MENDER 1/2 HOSE	2
85	270284	COMPRESSOR/AC	1
86	650419	SCREW/CAP 1/4 X 1-3/4	1
87	650426	SCREW/CAP 1/4 X 1-1/4	2
88	650490	SCREW/CAP 3/8 X 1	2
89	650579	SCREW/CAP 3/8 X 1-3/4	1
90	650851	SCREW/CAP 3/8 X 4-1/2	4
91	650969	BOLT/CARRIAGE ROUND HEAD SOCKET SQUARE NECK 5/16 X 5/8	4
92	651065	BOLT/CARRIAGE ROUND HEAD SOCKET SQUARE NECK 5/16 X 1	2
93	651307	SCREW/MACHINE PAN HEAD CROSS RECESSED 1/4 X 1/2	12
94	651308	SCREW/MACHINE PAN HEAD CROSS RECESSED 1/4 X 3/4	4
95	651395	SCREW/CAP M10 X 30 MM	4
96	651776	SCREW/CAP SOCKET HEAD M10 X 55 MM	2
97	651803	SCREW/CAP M8 X 20 MM	4
98	654002	WASHER/FLAT 1/4	2
99	654004	WASHER/FLAT 5/16	4
100	654049	WASHER/FLAT 3/8	6
101	656133	WASHER/FLAT M10	3
102	243446	LOUVER/SNAP-IN	2

a) For breakdown see “Section B” of this manual.

HVAC Completing

V270 Models: SN 021346 and Before

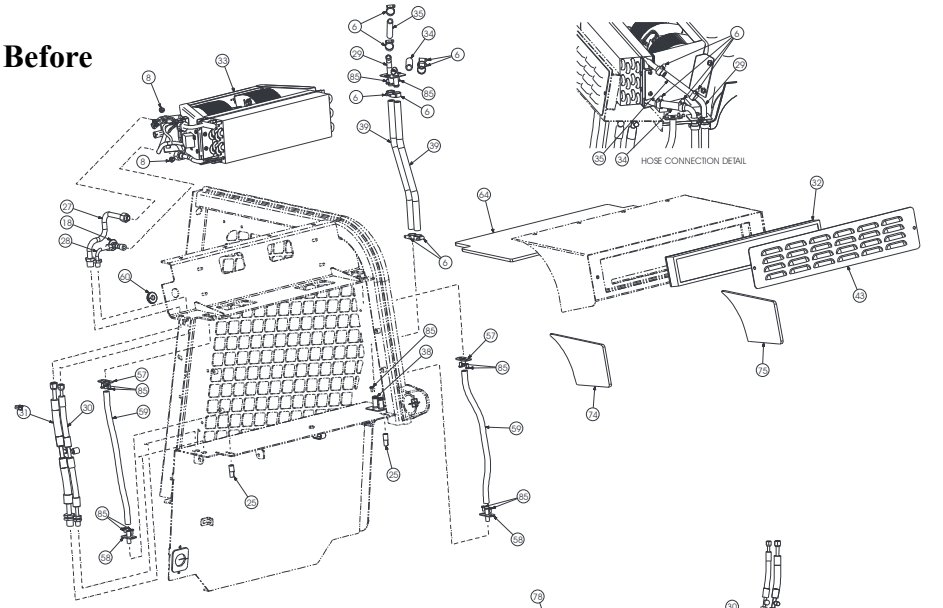

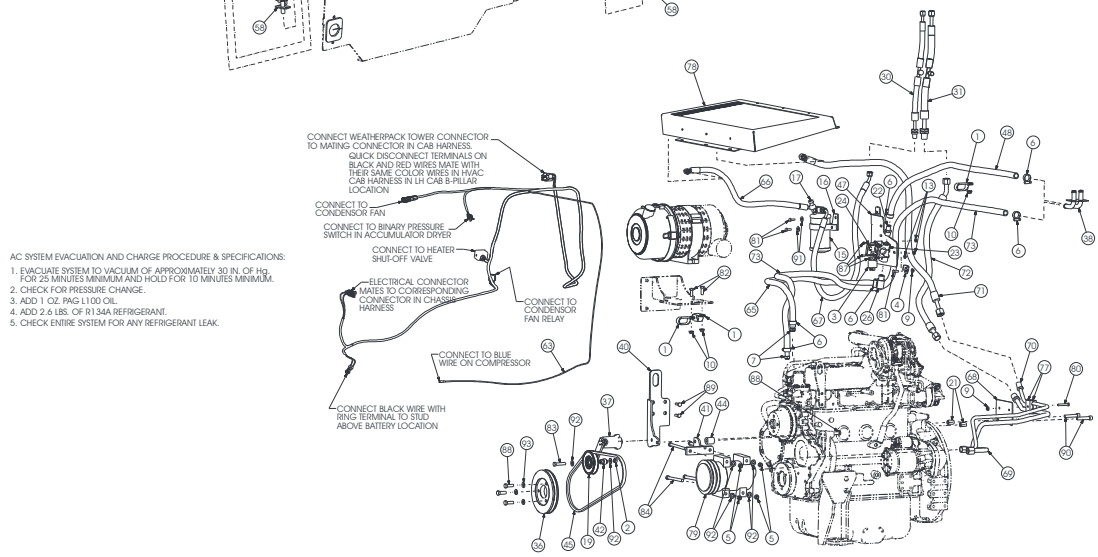

AC SYSTEM EVACUATION AND CHARGE PROCEDURE & SPECIFICATIONS:

1. EVACUATE SYSTEM TO VACUUM OF APPROXIMATELY 30 IN. OF Hg. FOR 25 MINUTES MINIMUM AND HOLD FOR 10 MINUTES MINIMUM.
2. CHECK FOR PRESSURE CHANGE.
3. ADD 1 OZ. PAG L100 OIL.
4. ADD 2.6 LBS. OF R134A REFRIGERANT.
5. CHECK ENTIRE SYSTEM FOR ANY REFRIGERANT LEAK.

SN 021041 and Before

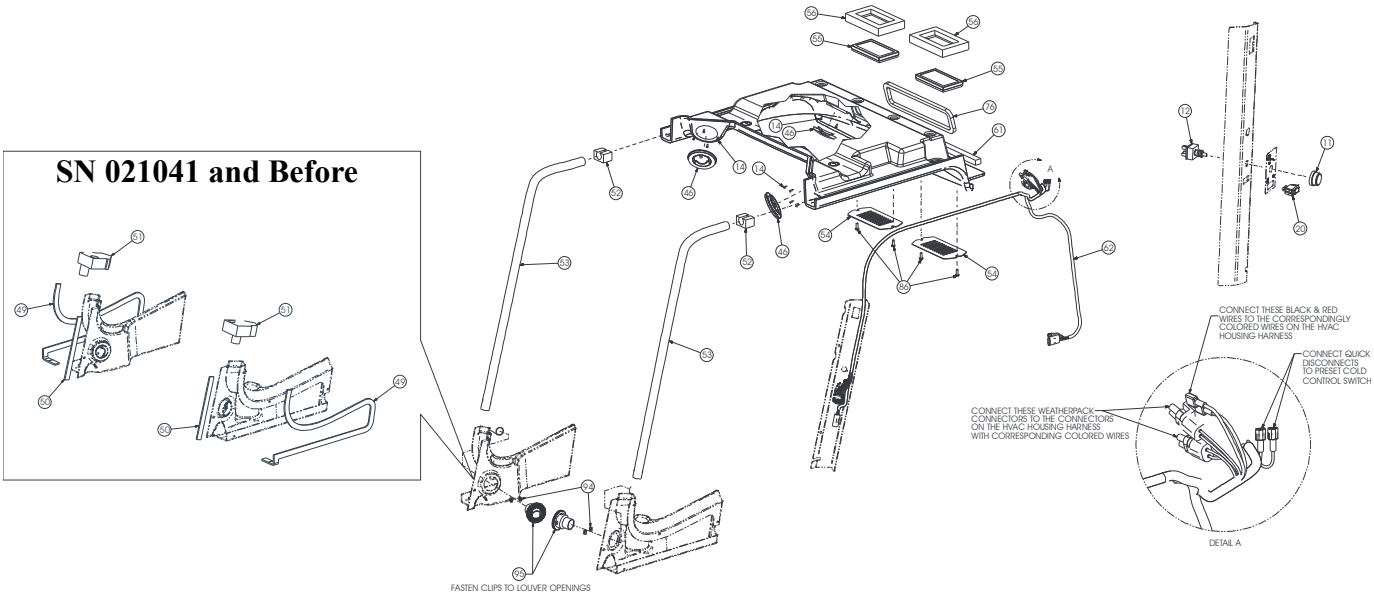

410264

Ref. No.	Part No.	Description	Quantity HVAC
1	067849	CLAMP/HOSE 7/8 X 13/32 HOLE	3
2	071703	NUT/LOCK HEX 3/8	1
3	242145	RELAY/SEALED	1
4	089071	CLAMP/HALF	1
5	094762	NUT/LOCK OVAL TOP 3/8	4
6	095955	CLAMP/HOSE #10	14
7	104052	FITTING/STRAIGHT HB10-MBSPT06	2
8	131842	NUT/SPIRALOCK™ 5/16	4
9	134588	NUT/SPIRALOCK™ 1/4	4
10	134852	NUT/SPIRALOCK™ 3/8	3
11	136304	KNOB/HEATER SWITCH	1
12	136305	SWITCH/HEATER	1
13	137797	NUT/WHIZLOCK SERRATED FLANGE #10	3
14	137821	SCREW/TAPPING CROSS RECESSED COUNTERSUNK HEAD #6 X 1/2	16
15	138649	RECEIVER/DRYER/AC	1
16	138651	CLAMP/RECEIVER DRYER	1
17	138714	SWITCH/BINARY/AC	1
18	138723	VALVE/EXPANSION/AC	1
19	139952	PULLEY/VEE W/BEARING	1
20	183608	SWITCH/ROCKER/ON-OFF-ON	1
21	184006	SPACER/ALARM/BRACKET	2
22	186193	FITTING/STRAIGHT 1/2 MPT X 5/8 HOSE	1
23	243350 c	VALVE/SOLENOID HEATER AC	1
	186703 b	HEATER/AC SOLENOID VALVE	1
24	186716	CLAMP/VALVE	1
25	187030	CAP/DRIP	2
26	191351	FITTING/ELBOW 90º 1/2 NPT	1
27	195585	TUBE/AC/#10	1
28	195588	TUBE/AC/#6	1
29	195591	TUBE/HEATER	1
30	195605	HOSE/#6/AC	1
31	195606	HOSE/#10/AC	1
32	195660	FILTER/HVAC FRESH AIR	1
33	REFa	ASSEMBLY/HVAC HOUSING	1
34	240523	HOSE/HEATER	1
35	240585	HOSE/HEATER	1
36	241008	PULLEY/CRANK/AC	1
37	241010	TENSIONER/BELT	1
38	241208	PLATE/HEATER TUBE	1
39	241209	HOSE/HEATER	2
40	241251	BRACKET/TENSIONER	1
41	243493	BRACKET/COMPRESSOR	1
42	241385	SPACER/PULLEY	1
43	241486	PLATE/COVER LOUVERED	1
44	241844	SPACER/ALTERNATOR	1
45	242274	BELT/AC	1
46	242437	VENT	4
47	243358 c	BRACKET/MOUNTING HEATER VALVE	1
	651065 c	BOLT/CARRIAGE SQUARE NECK 5/16 X 1 (SECURES 243358 TO CHASSIS)	2
	242494 b	BRACKET/MTG HEATER VALVE	1

a) For breakdown see “Section B” of this manual.
b) SN 021041 and Before
c) SN 021042 and Up

Parts Listing Continued On Next Page

HVAC Completing

V270 Models: SN 021346 and Before

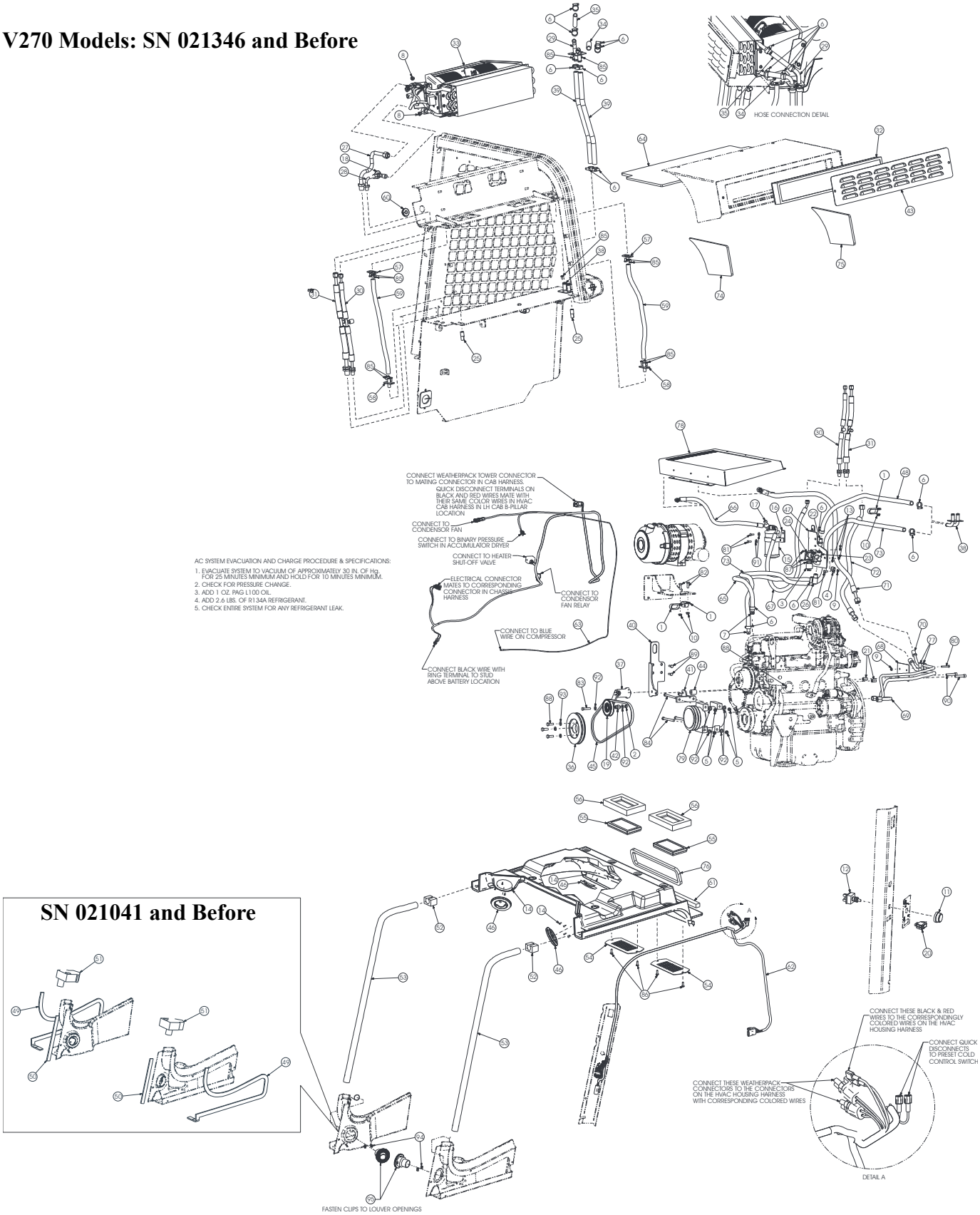

410264

continued from previous page

Ref. No.	Part No.	Description	Quantity HVAC
48	242509	HOSE/HEATER	1
49	242527 b	SEAL/SIDE CONSOLE	2
50	242530 b	SEAL/FRONT DUCT	2
51	242531 b	PLUG/DUCT PASS-THROUGH	2
52	242534	PLUG/PASS-THROUGH TUBE	2
53	242537	TUBE/FORWARD HVAC	2
54	242831	COVER/RECIRC	2
55	242832	FILTER/RECIRC	2
56	242833	PAD/SEALING FILTER	2
57	242851	TUBE/DRAIN	2
58	242853	TUBE/DRAIN	2
59	242861	HOSE/DRAIN	2
60	242862	GROMMET/HVAC COMPT	1
61	242863	PAD/FOAM SEALING STRIP	1
62	242873	HARNESS/HVAC CAB	1
63	242898	HARNESS/HVAC CHASSIS	1
64	242917	PAD/HOUSING TOP	1
65	242950	HOSE/HEATER	1
66	242971	HOSE/#6 A/C	1
67	242975	HOSE/#6 A/C	1
68	243365 c	BRACKET/MTG AC LINES	1
	242992 b	BRACKET/MTG AC LINES	1
69	242993	TUBE/A/C LOW PRESSURE	1
70	242994	TUBE/A/C HIGH PRESSURE	1
71	242998	HOSE/#8 A/C	1
72	243000	HOSE/#10 A/C	1
73	243008	HOSE/HEATER	1
74	243013	PAD/HOUSING LEFT	1
75	243014	PAD/HOUSING RIGHT	1
76	243017	PAD/HVAC HEADLINER SEAL	1
77	243033	CLAMP/TUBE/TWIN/AC	2
78	REFa	ASSEMBLY/CONDENSER	1
79	270284	COMPRESSOR/AC	1
80	650419	SCREW/CAP 1/4 X 1-3/4	1
81	650426 c	SCREW/CAP 1/4 X 1-1/4	2
	650448 b	SCREW/CAP 1/4 X 3/4	3
82	650490	SCREW/CAP 3/8 X 1	2
83	650579	SCREW/CAP 3/8 X 1-3/4	1
84	650851	SCREW/CAP 3/8 X 4-1/2	4
85	651307	SCREW/MACHINE PAN HEAD CROSS RECESSED 1/4 X 1/2	12
86	651308	SCREW/MACHINE PAN HEAD CROSS RECESSED 1/4 X 3/4	4
87	651312 b	SCREW/MACHINE PAN HEAD CROSS RECESSED TRUSS HEAD #10 X 1/2	3
88	651395	SCREW/CAP M10 X 30 MM	4
89	651803	SCREW/CAP M8 X 20 MM	2
90	651776	SCREW/CAP SOCKET HEAD M10 X 55 MM	2
91	654002	WASHER/FLAT 1/4	2
92	654049	WASHER/FLAT 3/8	6
93	656133	WASHER/FLAT M10	3
94	243445 c	CLIP/HOSE RETAINING	4
95	243446 c	LOUVER/SNAP-IN	2

a) For breakdown see “Section B” of this manual.
b) SN 021041 and Before
c) SN 021042 and Up

Heater-Only Completing
V270 Models: SN 021951 and Up
V330 Models: SN 131401 and Up

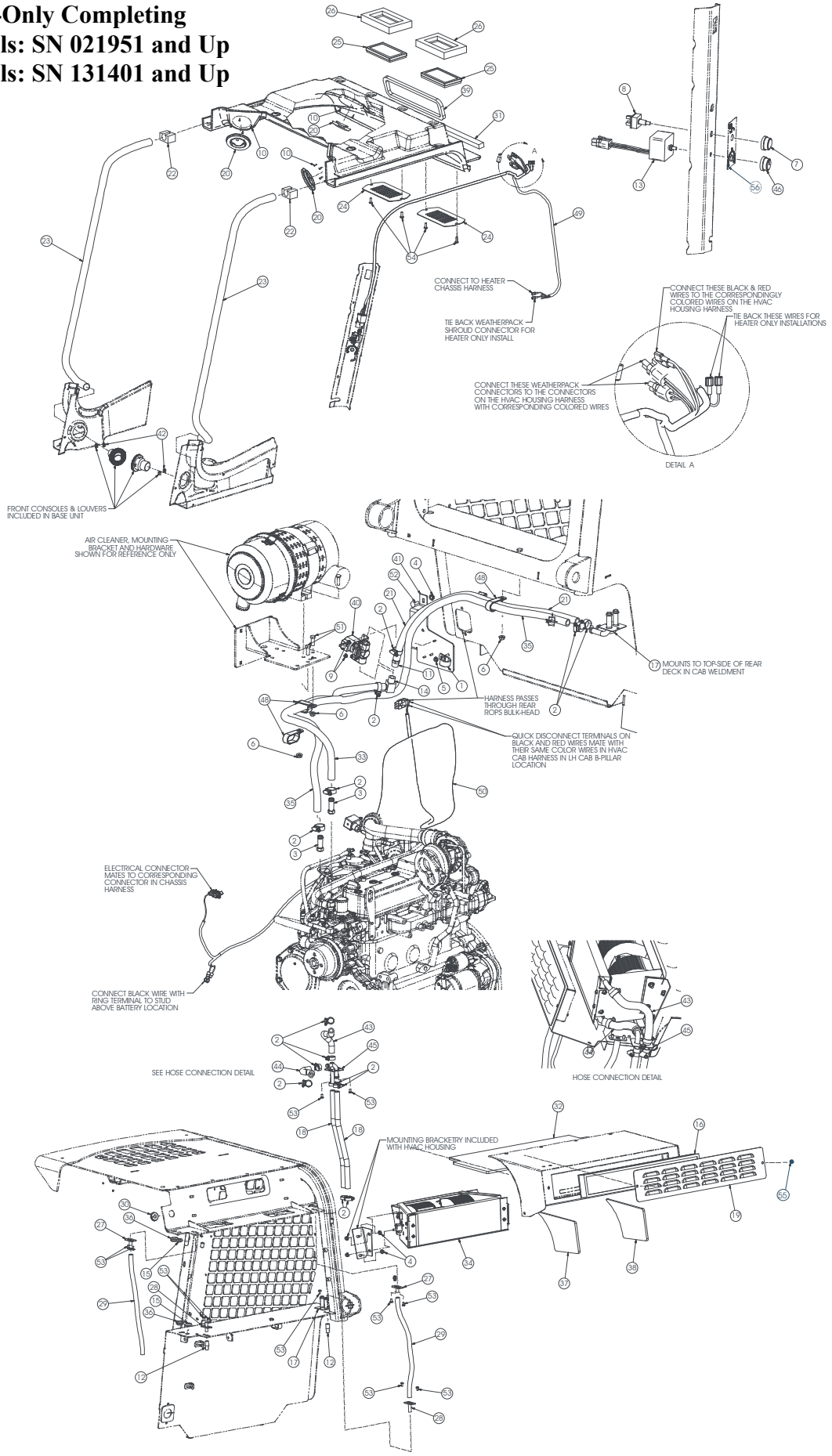

410423

Ref. No.	Part No.	Description	Quantity
1	058805	CLAMP/HOSE 1-1/8 X 13/32 HOLE	1
2	095955	CLAMP/HOSE #10	14
3	104052	FITTING/STRAIGHT HB10-MBSPT06	2
4	131842	NUT/SPIRALOCK™ 5/16	6
5	134588	NUT/SPIRALOCK™ 1/4	1
6	134852	NUT/SPIRALOCK™ 3/8	3
7	136304	KNOB/HEATER SWITCH	1
8	136305	SWITCH/HEATER	1
9	137797	NUT/WHIZLOCK SERRATED FLANGE #10	2
10	137821	SCREW/TAPPING CROSS RECESSED COUNTERSUNK HEAD #6 X 1/2	16
11	186193	FITTING/STRAIGHT 1/2 MPT X 5/8 HOSE	1
12	187030	CAP/DRIP	2
13	189033	MODULE/AC CONTROL	1
14	191351	FITTING/ELBOW 90º 1/2 NPT	1
15	192182	PLUG/RUBBER	2
16	195660	FILTER/HVAC FRESH AIR	1
17	241208	PLATE/HEATER TUBES	1
18	241209	HOSE/HEATER	2
19	241486	PLATE/COVER LOUVERED	1
20	242437	VENT	4
21	242509	HOSE/HEATER	1
22	242534	PLUG/PASS-THROUGH TUBE	2
23	242537	TUBE/FORWARD HVAC	2
24	242831	COVER/RECIRC	2
25	242832	FILTER/RECIRC	2
26	242833	PAD/SEALING FILTER	2
27	242851	TUBE/DRAIN	2
28	242853	TUBE/DRAIN	2
29	242861	HOSE/DRAIN	2
30	242862	GROMMET/HVAC COMPT	1
31	242863	PAD/FOAM SEALING STRIP	1
32	242917	PAD/HOUSING TOP	1
33	242950	HOSE/HEATER	1
34	REFa	ASSY/HEATER HOUSING	1
35	243008	HOSE/HEATER	1
36	243009	GROMMET .69ID .250GW 1.0	2
37	243013	PAD/HOUSING LEFT	1
38	243014	PAD/HOUSING RIGHT	1
39	243017	PAD/HVAC HEADLINER SEAL	1
40	243350	VALVE/SOLENOID HTR/AC	1
41	243358	BRACKET/MOUNTING HEATER VALVE	1
42	243445	CLIP/HOSE RETAINING	4
43	243737	HOSE/MOLDED HEATER (SUPPLY)	1
44	243738	HOSE/MOLDED HEATER (RETURN)	1
45	243741	TUBE/HEATER	1
46	244496	KNOB/HVAC TEMP CONTROL	1
47	244821	CAP/TUBE 1/2 TUBE OD	2
48	271341	CLAMP/HOSE 1 X 13/32 HOLE	3
49	50351041	HARNESS/HVAC CAB	1
50	50351045	HARNESS/HEATER CHASSIS	1
51	650490	SCREW/CAP 3/8 X 1	2
52	651065	BOLT/CARRIAGE ROUND HEAD SOCKET SQUARE NECK 5/16 X 1	2
53	651307	SCREW/MACHINE PAN HEAD CROSS RECESSED 1/4 X 1/2	12
54	651308	SCREW/MACHINE PAN HEAD CROSS RECESSED 1/4 X 3/4	4
55	242482	KNOB/CLAMPING	2
56	243973	DECAL/FAN SPEED	1

a) For breakdown see “Section B” of this manual.
b) Exceptions to SN break, V270 Models: SN 021753-021756

Heater-Only Completing
V270 Models: SN 021950 and Before
V330 Models: SN 131400 and Before

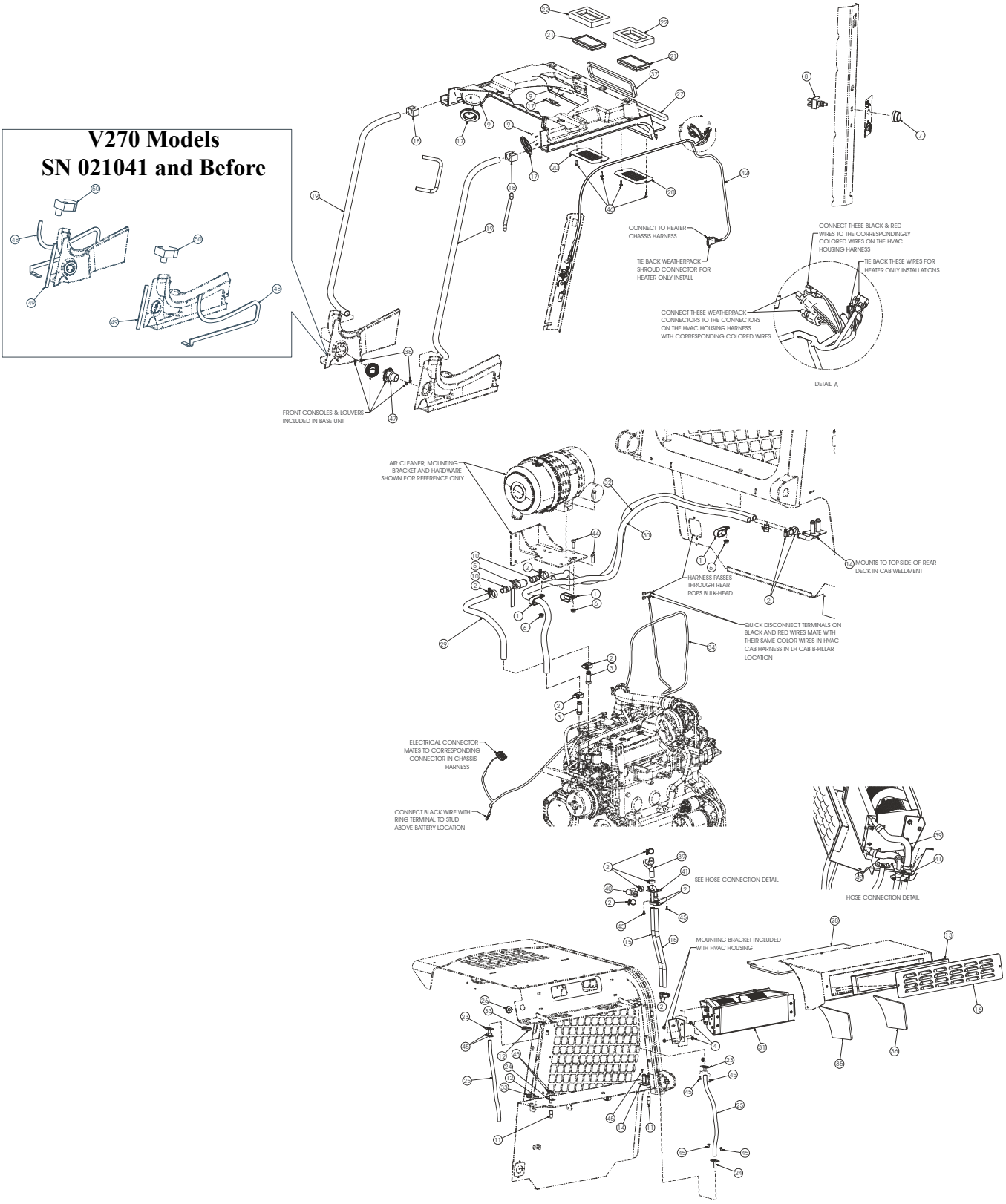

410423

Ref. No.	Part No.	Description	Quantity
1	067849	CLAMP/HOSE 7/8 X 13/32 HOLE	3
2	095955	CLAMP/HOSE #10	14
3	104052	FITTING/STRAIGHT HB10-MBSPT06	2
4	131842	NUT/SPIRALOCK™ 5/16	4
5	132504	VALVE/BALL	1
6	134852	NUT/SPIRALOCK 3/8-16	3
7	136304	KNOB/HEATER SWITCH	1
8	136305	SWITCH/HEATER	1
9	137821	SCREW/TAPPING CROSS RECESSED COUNTERSUNK HEAD #6 X 1/2	16
10	186193	FITTING/STRAIGHT 1/2 MPT X 5/8 HOSE	2
11	187030	CAP/DRIP	2
12	192182	PLUG/RUBBER	2
13	195660	FILTER/HVAC FRESH AIR	1
14	241208	PLATE/HEATER TUBES	1
15	241209	HOSE/HEATER	2
16	241486	PLATE/COVER LOUVERED	1
	242482	KNOB/CLAMPING (SECURES 241486 PLATE)	2
17	242437	VENT	4
18	242534	PLUG/PASS-THROUGH TUBE	2
19	242537	TUBE/FORWARD HVAC	2
20	242831	COVER/RECIRC	2
21	242832	FILTER/RECIRC	2
22	242833	PAD/SEALING FILTER	2
23	242851	TUBE/DRAIN	2
24	242853	TUBE/DRAIN	2
25	242861	HOSE/DRAIN	2
26	242862	GROMMET/HVAC COMPT	1
27	242863	PAD/FOAM SEALING STRIP	1
28	242917	PAD/HOUSING TOP	1
29	243005	HOSE/HEATER	1
30	243006	HOSE/HEATER	1
31	REFa	ASSY/HEATER HOUSING	1
32	243008	HOSE/HEATER	1
33	243009	PLUG/GROMMET	2
34	243011	HARNESS/CHASSIS HEATER	1
35	243013	PAD/HOUSING LEFT	1
36	243014	PAD/HOUSING RIGHT	1
37	243017	PAD/HVAC HEADLINER SEAL	1
38	243445 c	CLIP/HOSE RETAINING	4
39	243737	HOSE/MOLDED HEATER (SUPPLY)	1
40	243738	HOSE/MOLDED HEATER (RETURN)	1
41	243741	TUBE/HEATER	1
42	244508	HARNESS/HVAC CAB	1
43	244821	CAP/TUBE	2
44	650490	SCREW/CAP 3/8 X 1	2
45	651307	SCREW/MACHINE PAN HEAD CROSS RECESSED 1/4 X 1/2	12
46	651308	SCREW/MACHINE PAN HEAD CROSS RECESSED 1/4 X 3/4	4
47	243446 c	LOUVER/SNAP-IN	2
48	242527 b	SEAL/SIDE CONSOLE	2
49	242530 b	SEAL/FRONT DUCT	2
50	242531 b	PLUG/DUCT PASS-THROUGH	2

a) For breakdown see “Section B” of this manual.
b) V270 Models: SN 021041 and Before
c) V270 Models: SN 021042 -021950. V330 Models: SN 131400 and Before

GRILLE AND ENGINE COVER

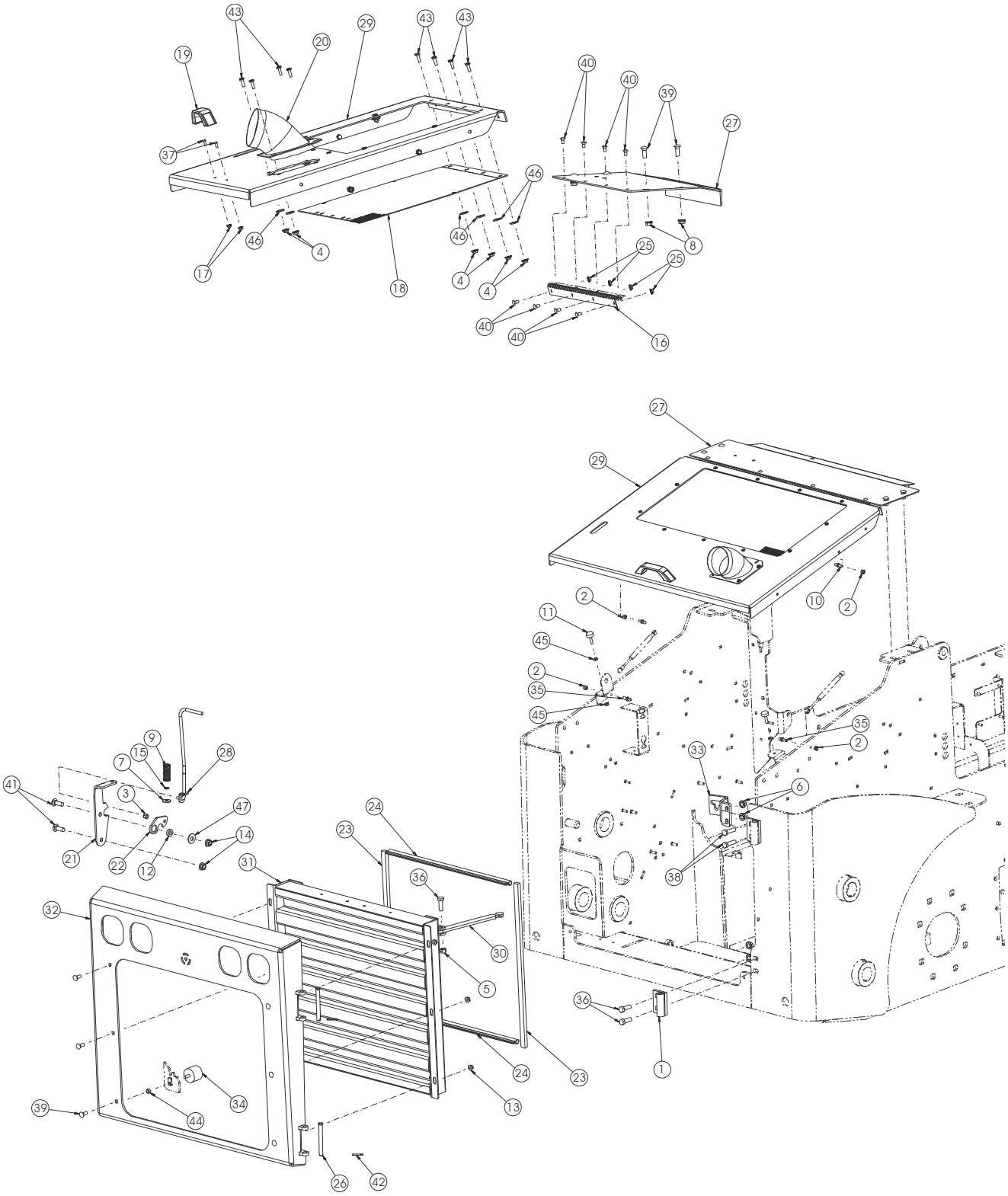

410564_410549

Ref. No.	Part No.	Description	Quantity
1	040-33643	HINGE/REAR DOOR	2
2	064260 b	NUT/HEX LOCK 5/16	4
	131842 a	NUT/SPIRALOCK™ 5/16 (TWO QUANTITY ON BALL STUD, REF ITEM #35)	2
3	067847	NUT/HEX LOCK 3/8	1
4	070634	NUT/HEX LOCK SERRATED 1/4	15
5	071706	NUT/HEX LOCK 1/2	1
6	081374	NUT/HEX LOCK FLANGE SERRATED 1/2	4
7	088912	WASHER/FLAT 13/32	1
8	090666	NUT/HEX LOCK FLANGE SERRATED 3/8	4
9	114665	SPRING/COMPRESSION	1
10	122485	STUD/BALL	2
11	131913	BUMPER	2
12	131940	BUSHING	1
13	134852	NUT/SPIRALOCK™ 3/8	6
14	134853	NUT/SPIRALOCK™ 1/2	2
15	136251	CLIP/RETAINING	1
16	137641	HINGE/PIANO	1
17	137797	NUT/WHIZLOCK SERRATED FLANGE #10	2
18	183812	SCREEN	1
19	184023	HANDLE/GRAB/MOLDED	1
20	189401	TUBE ASSEMBLY/EXHAUST SHROUD	1
21	189833	LATCH/MOUNT	1
22	190045	LATCH/REAR GRILLE	1
23	190280	SEAL/FOAM	2
24	190282	SEAL/BULB	2
25	210-19469	NUT/LOCK FLANGE SERRATED 1/4	8
26	220-32536	PIN/CLEVIS	2
27	240971	COVER/REAR CROSSMEMBER	1
28	241679	ASSEMBLY/LATCH ROD	1
29	241738	COVER/ENGINE	1
31	242049	PLATE/DOOR CATCH	1
31	242569	SCREEN/REAR GRILLE	1
32	244318 b	GRILLE/REAR	1
	242398 a	GRILLE/REAR	1
33	244650 b	CATCH/DOOR	1
	242055 a	CATCH/DOOR	1
34	420-13731	BUMPER/RUBBER	1
35	50350283 b	STUD/BALL	2
	122485 a	STUD/BALL	2
36	650453 b	SCREW/CAP 1/2 X 1-1/2	3
	650834 a	BOLT/CARRIAGE 1/2 X 1-1/2 (TWO QUANTITY ON DOOR HINGE, REF ITEM #1)	2
37	650548	SCREW/MACHINE ROUND HEAD #10 X 1/2	2
38	650569 b	SCREW/CAP 1/2 X 1-3/4	2
	650834 a	BOLT/CARRIAGE 1/2 X 1-1/2	2
39	650704	BOLT/CARRIAGE 3/8 X 1	10
40	650771	BOLT/CARRIAGE 1/4 X 1/2	8
41	650834	BOLT/CARRIAGE 1/2 X 1-1/2	2
42	650878 b	PIN/COTTER 5/32 X 1	2
	220-20554 a	PIN/COTTER 5/32 X 1	2
43	651308	SCREW/MACHINE PAN HEAD CROSS RECESSED 1/4 X 3/4	15
44	653010	NUT/HEX 3/8	1
45	653034	NUT/HEX JAM 5/16	4
46	654004	WASHER/FLAT 5/16	15
47	654009	WASHER/FLAT 1/2	1

a) V270 Models: SN 021600 and Before
b) V270 Models: SN 021601 and Up. All V330 Models.

ROPS/FOPS STRUCTURE

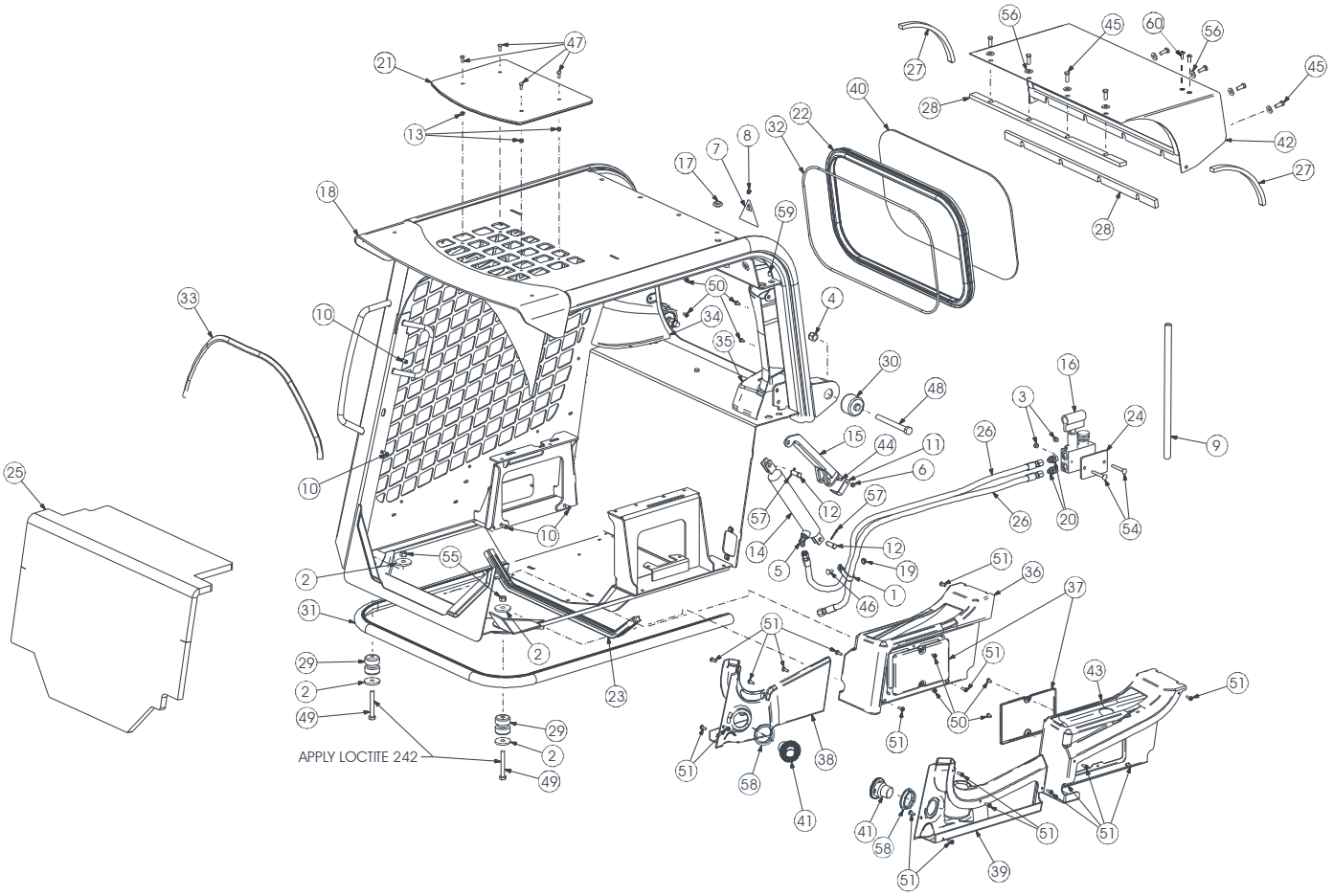

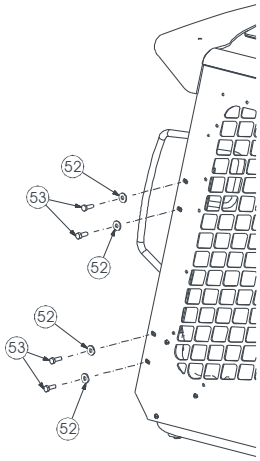

410279

Ref. No.	Part No.	Description	Quantity
1	055021	CLAMP/HOSE	1
2	057557	WASHER/FLAT 17/32	4
3	064260	NUT/HEX LOCK 5/16	2
4	067823	NUT/HEX LOCK 5/8	2
5	068938	FITTING/90º MJ06 X MAORB06	1
6	071401	NUT/HEX INST LOCK 1/4	1
7	132166	TAG/RIP CORD	1
8	132294	RING	1
9	137447	TUBE/HANDLE	1
10	NSS	INSERT/INTERNALLY THREADED	16
11	137696	BAR/LOCK LIFT	1
12	137707	PIN/CLEVIS	2
13	138825	NUT/ACORN 1/4	4
14	140655 a	CYLINDER/SINGLE- ACTING	1
15	140855	ASSEMBLY/LOCK	1
16	183672 a	ASSEMBLY/PUMP	1
17	192182	PLUG/RUBBER	1
18	195350	ROPS/FOPS	1
19	210-19470	NUT/LOCK FLANGE SERRATED 5/16	1
20	230-24749	FITTING/STRAIGHT 9/16 JIC X 3/4 SAE	2
21	240054	WINDOW/TOP	1
22	240645	WEATHERSTRIP/WINDOW	1
23	240687	SEAL/BULB	1
24	240954	PLATE/SPACER	1
25	241187	PAD/ACOUSTIC REAR DECK	1
26	241285	HOSE/PRESSURE 3/8 X 56	2
27	241312	SEAL/FOAM SIDE	2
28	241346	SEAL/FOAM BOTTOM	2
29	241354	MOUNT/ISOLATOR	2
30	241357	BUSHING/ROPS ISOLATOR	2
31	241390	SEAL/ROPS TO CHASSIS	1
32	241544	RIPCORD/WEATHERSTRIP	1
33	241560	TRIM/EDGE	1
34	241773	COVER/B-PILLAR RIGHT	1
35	242036	COVER/B-PILLAR LEFT	1
36	242315	CONSOLE/SIDE RIGHT	1
37	242317	PANEL/ACCESS	1
38	242322	CONSOLE/FRONT RIGHT	1
39	242323	CONSOLE/FRONT LEFT	1
40	243270	WINDOW/REAR	1
41	243446 c	LOUVER/SNAP-IN	2
	242533 b	FRONT PANEL/LOUVER	2
42	244681	HOUSING/HVAC	1
43	50350369	CONSOLE LEFT SIDE	1
44	650448	SCREW/CAP 1/4 X 3/4	1
45	650490	SCREW/CAP 3/8 X 1	8
46	650687	BOLT/CARRIAGE 5/16 X 3/4	1
47	650758	BOLT/CARRIAGE 1/4 X 3/4	4
48	650846	SCREW/CAP 5/8 X 6	2
49	651082	SCREW/CAP 1/2 X 3-1/2	2
50	651307	SCREW/MACHINE PAN HEAD CROSS RECESSED 1/4 X 1/2	8
51	651308	SCREW/MACHINE PAN HEAD CROSS RECESSED 1/4 X 3/4	18
52	651659	WASHER/FLAT M10 HARDENED	4
53	651821	SCREW/CAP M10 X 30 MM	4
54	652040	BOLT/CARRIAGE 5/16 X 2-1/2	2
55	653018	NUT/HEX 1/2	2
56	654006	WASHER/FLAT 3/8	8
57	655006	PIN/COTTER 1/8 X 1	2
58	241652 b	RETAINER/SNAP-IN	2
59	NSS	INSERT/THREADED 1/4	12
60	651640	SCREW/CAP BUTTON HEAD 5/16 X 3/4	2

a) For breakdown see “Section B” of this manual.
b) V270 Models: SN 021041 and Before
c) V270 Models: SN 021042 and Up. All V330 Models.

Non-HVAC Assembly

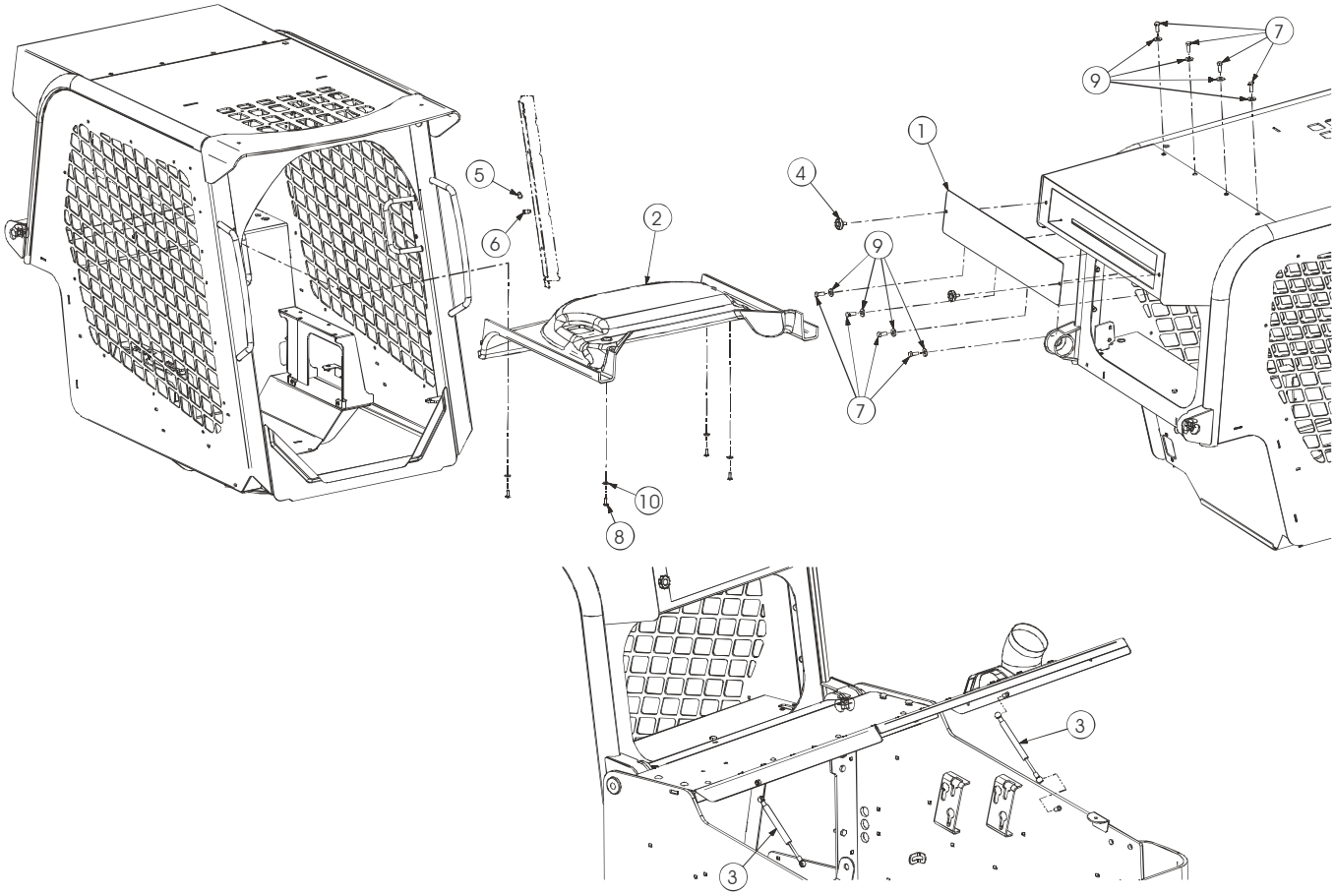

410551

Ref. No.	Part No.	Description	Non-HVAC Quantity
1	241480	COVER/AC HOUSING	1
2	242114	HEADLINER/NON A/C	1
3	242212	SPRING/GAS	2
4	242482	KNOB/CLAMPING 5/16 STUD	2
5	242776	PLUG/SWITCH	1
6	244492 b	PLUG/RUBBER 3/8	1
	241987 a	PLUG/HEATER A/C SWITCH	1
7	50657031	SCREW/CAP 3/8 X 1	8
8	651308	SCREW/MACHINE PAN HEAD CROSS RECESSED 1/4 X 3/4	4
9	651363	WASHER/FLAT 3/8	8
10	651807	WASHER/FLAT 1/4	4

a) V270 Models: SN 021346 and Before
b) V270 Models: SN 021347 and Up. All V330 Models.

HVAC Assembly

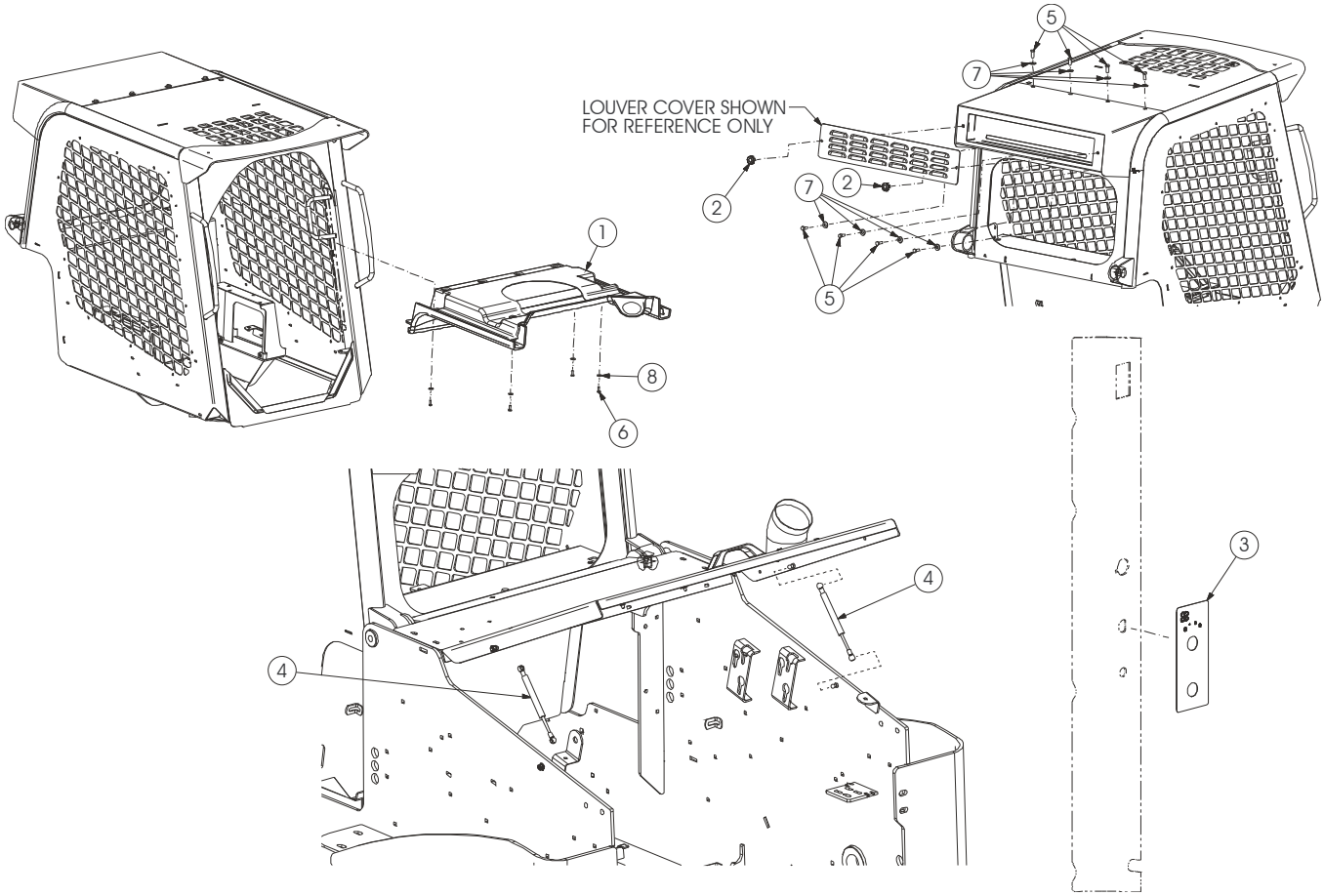

410432_410627

Ref. No.	Part No.	Description	HVAC Quantity
1	241650	HEADLINER/DUCT A/C	1
2	242482	KNOB/CLAMPING 5/16 STUD	2
3	243973 b	DECAL/FAN SPD	1
	242229 a	DECAL/FAN SPD	1
4	245211	SPRING/GAS (HVAC MODELS)	2
	242212	SPRING/GAS (HEATER-ONLY MODELS)	2
5	50657031	SCREW/CAP 3/8 X 1	8
6	651308	SCREW/MACHINE CROSS RECESSED PAN HEAD 1/4 X 3/4	4
7	651363	WASHER/FLAT 3/8	8
8	651807	WASHER/FLAT 1/4	4
9	244492 b	PLUG/RUBBER (NOT SHOWN - WAS USED BELOW ITEM #3)	1
	241987 a	PLUG/HEATER-AC SWITCH	1

a) V270 Models: SN 021346 and Before
b) V270 Models: SN 021347 and Up. All V330 Models.

EU Door Completing

Rear Window Wiper

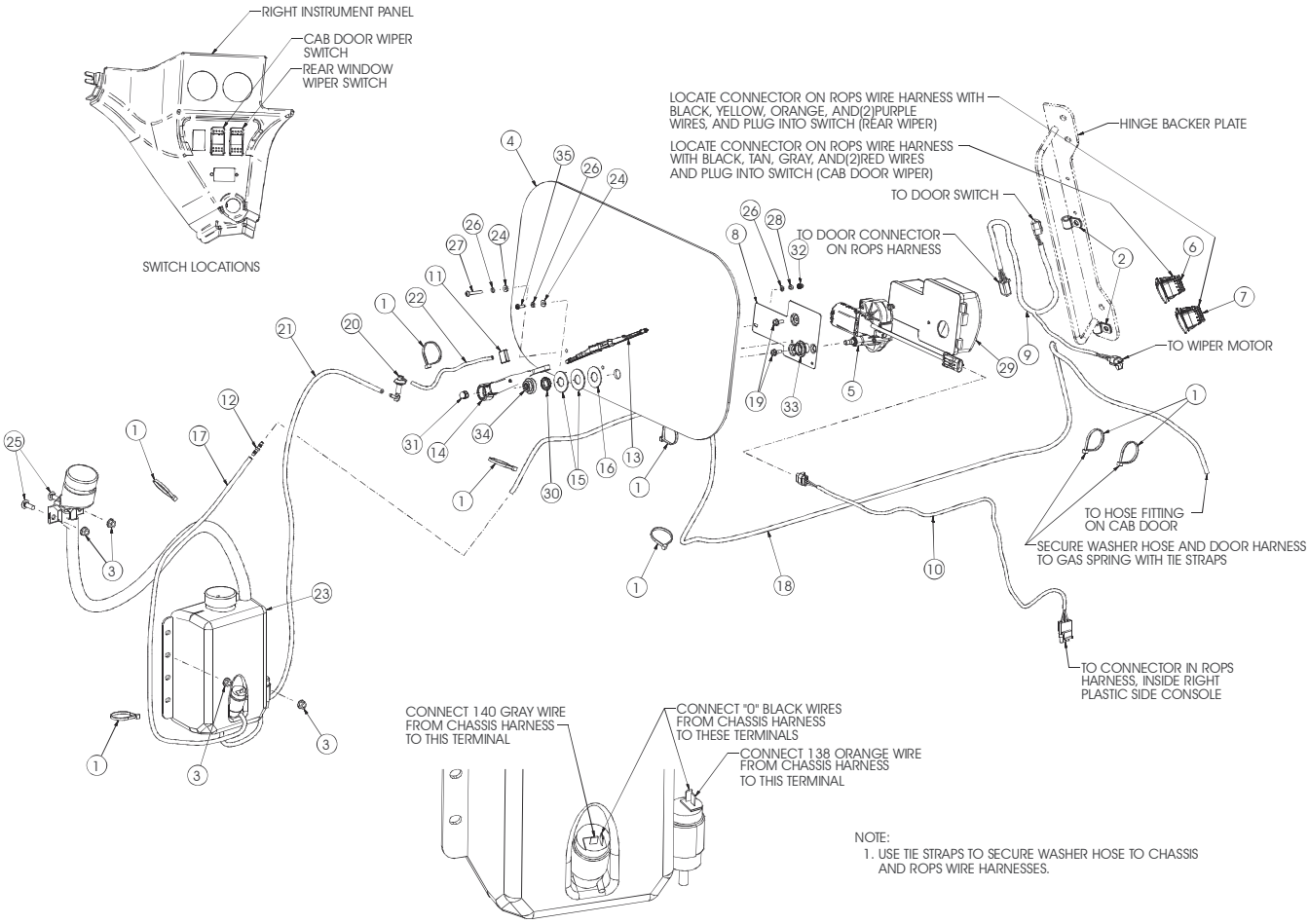

243544

Ref. No.	Part No.	Description	EU Door Completing Quantity
1	055648	TIE/CABLE 3/16 X 7-1/2	8
2	076147	CLAMP/HOSE 1/2 X 13/32 HOLE	2
3	210-19470	NUT/LOCK FLANGE SERRATED 5/16	4
4	240055	WINDOW/REAR	1
5	241900	MOTOR/REAR WIPER	1
6	242293	SWITCH/WIPER-WASHER	1
7	242340	SWITCH/REAR WIPER-WASHER	1
8	242801	PLATE/MOUNTING WIPER MOTOR	1
9	242866	HARNESS/DOOR	1
10	242867	WIPER HARNESS/REAR	1
11	242947	HEAD/SPRITZER	1
12	243450	BARB/HOSE	1
13	243452	BLADE/WIPER	1
14	243453	ARM/WIPER	1
15	243455	WASHER/FLAT	2
16	243456	WASHER/FIBER	1
17	243504	HOSE/WASHER 34.00	1
18	243505	HOSE/WASHER 112.00	1
19	243512	SCREW/TAPTITE M6	2
20	243516	ASSEMBLY/SPRAYER	1
21	243520	HOSE/REAR WIPER WASHER	1
22	243530	HOSE/REAR WIPER ARM	1
23	243535	RESERVOIR/DUAL PUMP (SERVICE PARTS INDENTED BELOW)	1
	243061	PUMP/WASHER	2
	243062	FILL SPOUT/REMOTE	1
	243063	CAP/VENTED	1
	243536	HOSE/TANK TO PUMP	1
24	243546	WASHER/RUBBER #10	2
25	650573	BOLT/CARRIAGE 5/16 X 1	2
26	651809	WASHER/FLAT M5	3
27	651810	SCREW/MACHINE PAN HEAD CROSS-RECESSED M5 X 35 MM	1
28	656100	NUT/HEX M5	1
29	L500696	COVER/WIPER MOTOR	1
30	L500697	NUT/HEX M18	1
31	L500700	NUT/PANTO PLATE M8	1
32	L500706	NUT/ACORN M5	1
33	L500708	TOWER SEAL/TRICO WIPER	1
34	L500709	SHIELD/RAIN	1
35	L500711	SCREW M5 X 16 MM	1

V270 Models: SN 021250 and Up
V330 Models

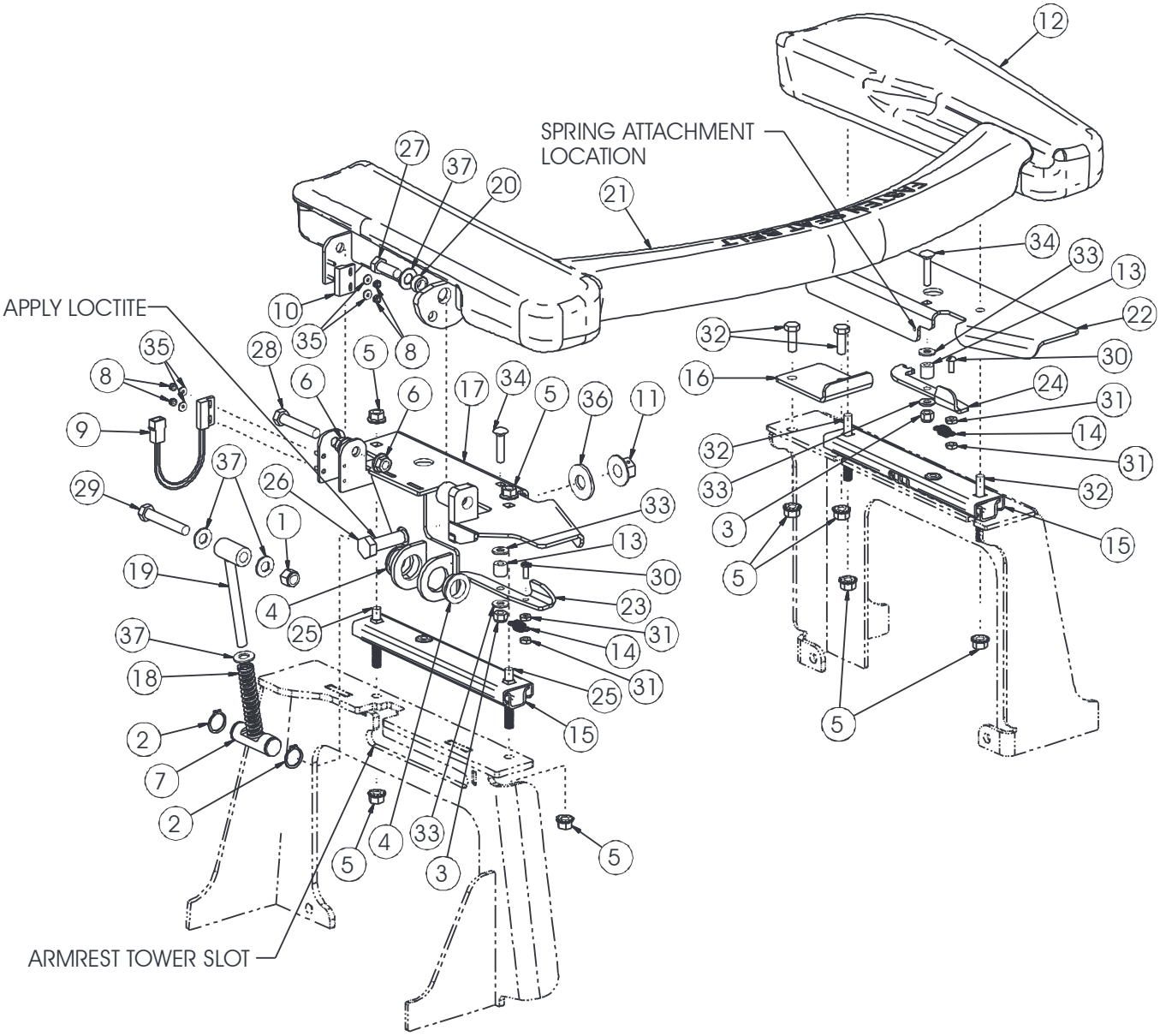

410472

Ref. No.	Part No.	Description	Quantity
1	067847	NUT/HEX LOCK 3/8	1
2	067950	RING/EXTERNAL RETAINING	2
3	071401	NUT/HEX INST LOCK 1/4	2
4	128316	BEARING/BRONZE	2
5	131842	NUT/SPIRALOCK™ 5/16	8
6	134852	NUT/SPIRALOCK™ 3/8	2
7	137036	PIN/PIVOT GROOVED	1
8	137061	NUT/HEX NYLON INSERT #4	4
9	193156	SWITCH/PROXIMITY	1
10	193157	MAGNET/SWITCH ACTUATOR	1
11	210-19530	NUT/HEX CENTERLOCK 1/2	1
12	241963	ARMREST/LEFT	1
13	242016	TUBE	2
14	242105	SPRING/EXTENSION	2
15	242275	RAIL/ARMREST	2
16	243179	STOP/TRAVEL	1
17	243226	BAR/PIVOT	1
18	243233	SPRING/COMPRESSION 3/8 X 3	1
19	243268	PIVOT ARM/RESTRAINT BAR	1
20	243391	SPACER/PIVOT	1
21	243394 a	BAR/RESTRAINT	1
22	243726	PLATE/SLIDER TOP LEFT	1
23	243829	LEVER/ADJUSTER RIGHT	1
24	243830	LEVER/ADJUSTER LEFT	1
25	650437	BOLT/CARRIAGE 5/16 X 5/8	2
26	650453	SCREW/CAP 1/2 X 1-1/2	1
27	650490	SCREW/CAP 3/8 X 1	1
28	650528	SCREW/CAP 3/8 X 2	1
29	650535	SCREW/CAP 3/8 X 2-1/4	1
30	650548	SCREW/MACHINE ROUND HEAD #10 X 1/2	2
31	650550	NUT/HEX MACHINE SCREW #10	4
32	650809	SCREW/CAP 5/16 X 7/8	4
33	650863	WASHER/FLAT 1/4	4
34	651094	BOLT/CARRIAGE 1/4 X 1-1/4	2
35	651529	WASHER/FLAT #4	4
36	654009	WASHER/FLAT 1/2	1
37	654049	WASHER/FLAT 3/8	4

a) Also includes V270 SN's: 021229, 021231, 021232, 021234 - 021240, 021246, and 021248.

V270 Models: SN 021249 and Before

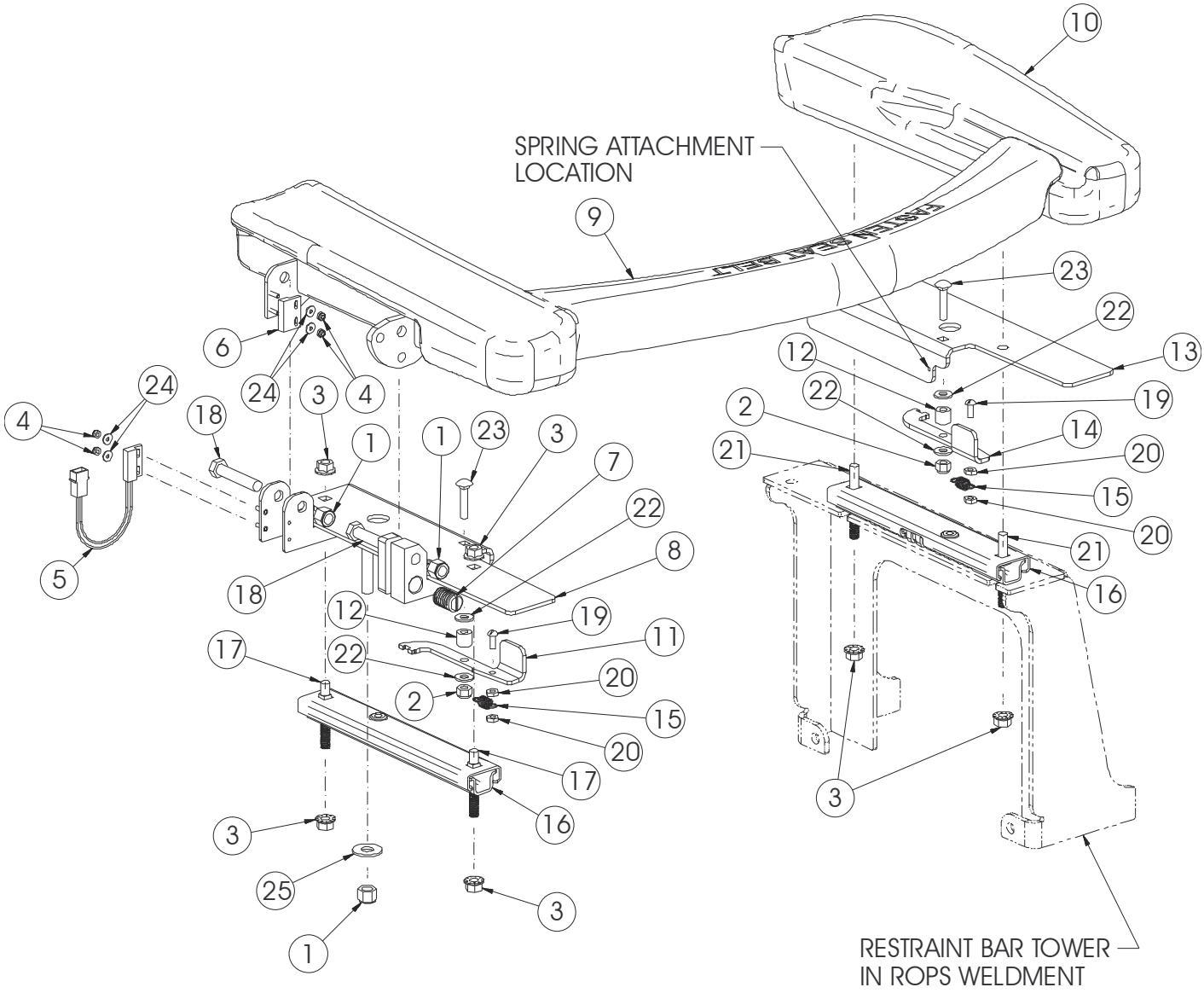

410497

Ref. No.	Part No.	Description	Quantity
1	067847	NUT/HEX LOCK 3/8	3
2	071401	NUT/HEX INST LOCK 1/4	2
3	131842	NUT/SPIRALOCK™ 5/16	6
4	137061	NUT/HEX NYLON INSERT #4	4
5	193156	SWITCH/PROXIMITY	1
6	193157	MAGNET/SWITCH ACTUATOR	1
7	241241	PLUNGER/BALL 5/8	1
8	241353	PIVOT/BAR	1
9	241962 a	BAR/RESTRAINT	1
10	241963	ARMREST/LEFT	1
11	241975	LEVER/ADJUSTER RIGHT	1
12	242016	TUBE	2
13	242027	PLATE/SLIDER TOP LEFT	1
14	242035	LEVER/ADJUSTER LEFT	1
15	242105	SPRING/EXTENSION	2
16	242275	RAIL/ARMREST	2
17	650437	BOLT/CARRIAGE 5/16 X 5/8	2
18	650528	SCREW/CAP 3/8 X 2	2
19	650548	SCREW/MACHINE ROUND HEAD #10 X 1/2	2
20	650550	NUT/HEX MACHINE SCREW #10	4
21	650809	SCREW/CAP 5/16 X 7/8	2
22	650863	WASHER/FLAT 1/4	4
23	651094	BOLT/CARRIAGE 1/4 X 1-1/4	2
24	651529	WASHER/FLAT #4	4
25	654006	WASHER/FLAT 3/8	1

a) Does not include V270 SN's: 021229, 021231, 021232, 021234 - 021240, 021246, and 021248.

Standard and Air Suspension Seat

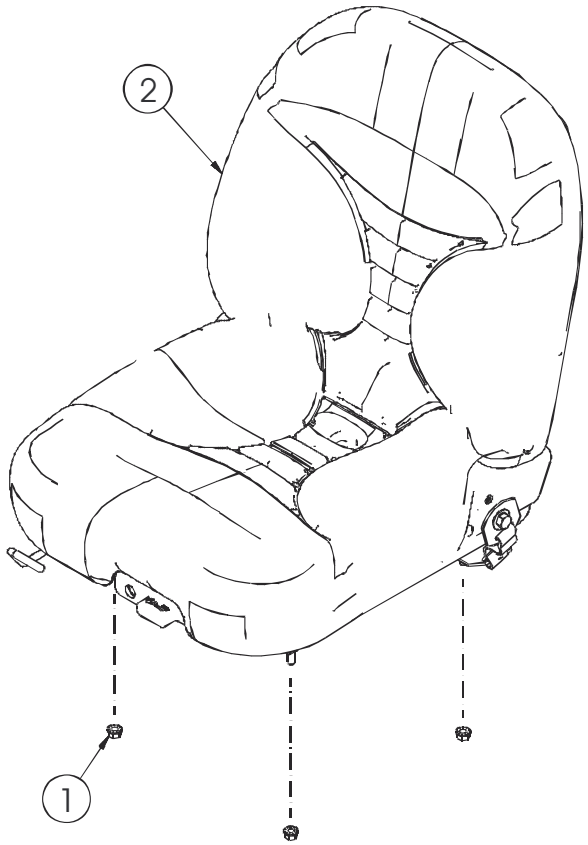

Seats Service Parts

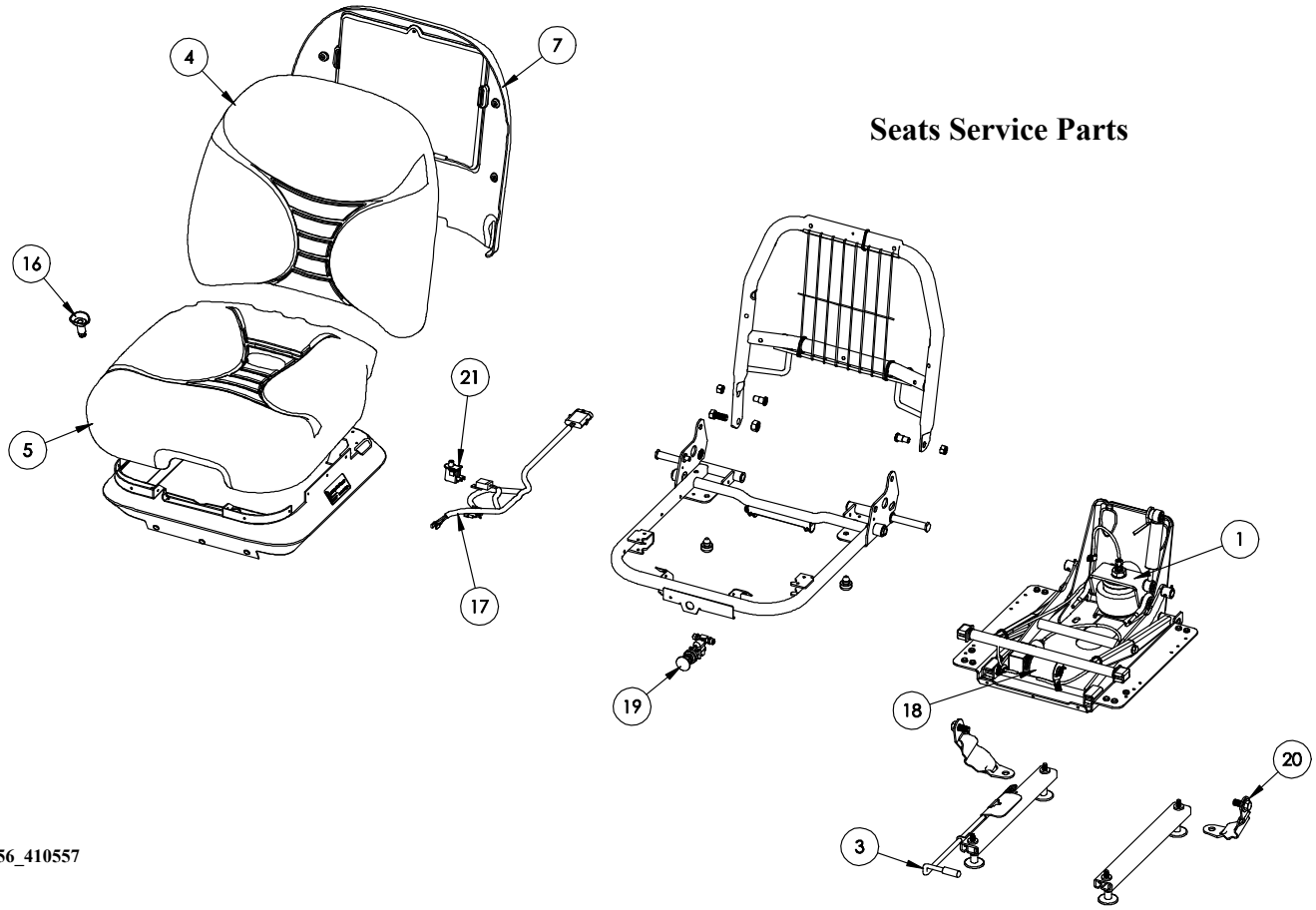

410556_410557

Ref. No.	Part No.	Description	Quantity
1	210-19470	NUT/LOCK FLANGE SERRATED 5/16	4
2	242514	SEAT/MECHANICAL SUSPENSION (SERVICE PARTS LISTED BELOW)	1
	242629	SEAT/AIR SUSPENSION (SERVICE PARTS LISTED BELOW)	1

Ref. No.	Part No.	Description	Seats Service Parts Quantity
1	243955	KIT/SPRING AND SADDLE/AIR BAG (AIR SUSPENSION SEAT ONLY)	1
3	243956	KIT/SLIDE	1
4	243958	VINYL KIT/BACK CUSHION	1
5	243959	VINYL KIT/SEAT CUSHION	1
7	243960	KIT/BACK PANEL	1
16	243961	DRAIN/WATER	1
17	243962	WIRE HARNESS/AIR SEAT (AIR SUSPENSION SEAT ONLY)	1
18	243963	KIT/COMPRESSOR (AIR SUSPENSION SEAT ONLY)	1
19	243964	KIT/AIR VALVE (AIR SUSPENSION SEAT ONLY)	1
20	243965	KIT/TETHER	1
21	243966	KIT/SAFETY SWITCH	1

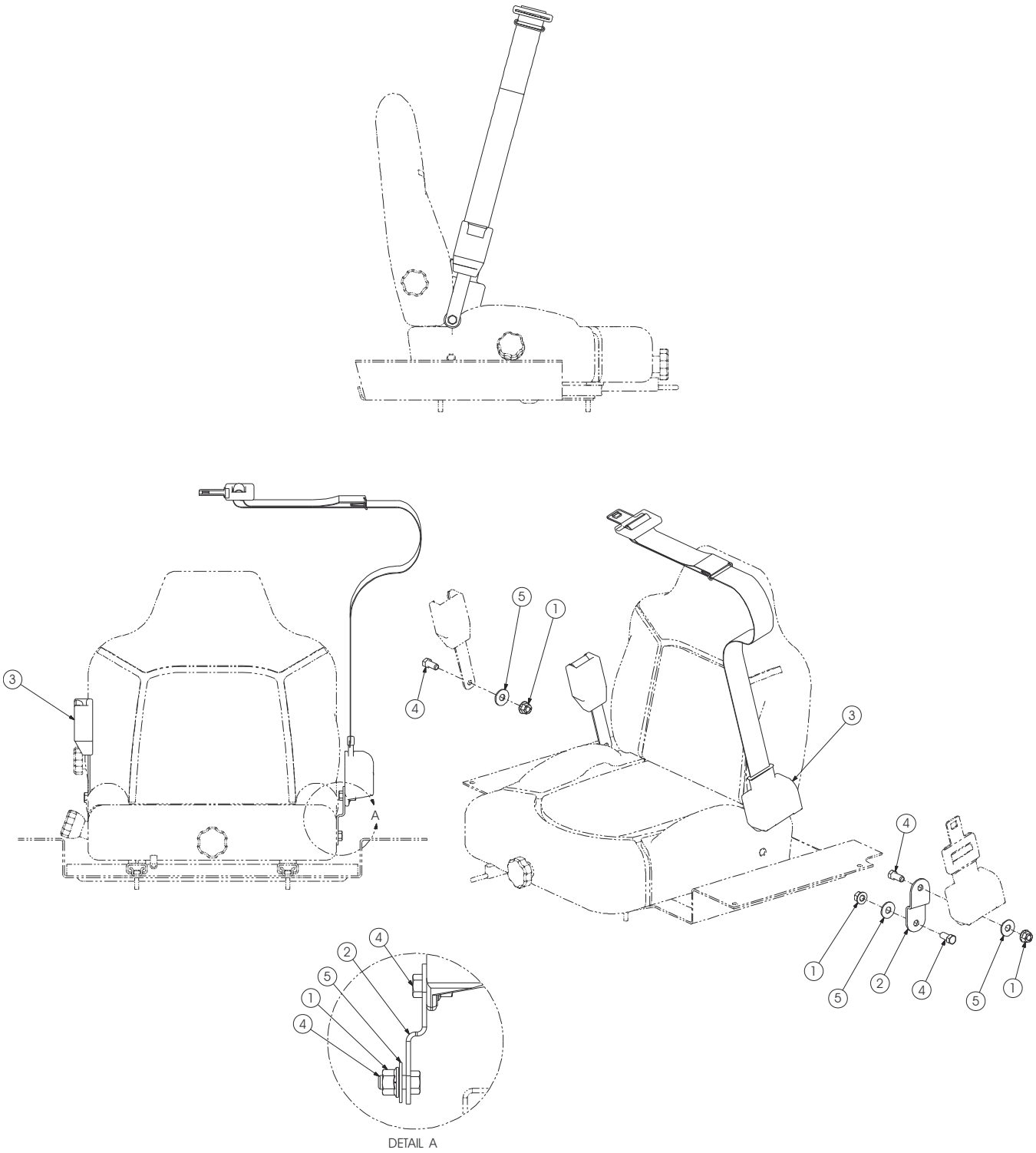

183287_183289

Ref. No.	Part No.	Description	Quantity 2” Seat Belt	Quantity 3” Seat Belt
1	081371	NUT/HEX LOCK 7/16	3	3
2	184007	TAB/RETRACTOR MOUNT	1	1
3	420-36086	ASSEMBLY/ SEAT BELT 2"	1	-
	420-36087	ASSEMBLY/SEAT BELT 3"	-	1
4	650630	SCREW/CAP 7/16 X 1	3	3
5	654046	WASHER/FLAT 7/16	3	3

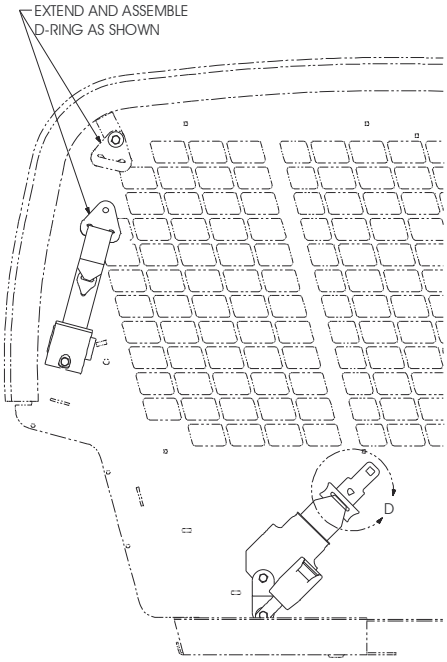

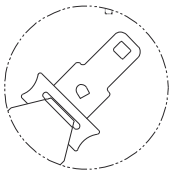

DETAIL D

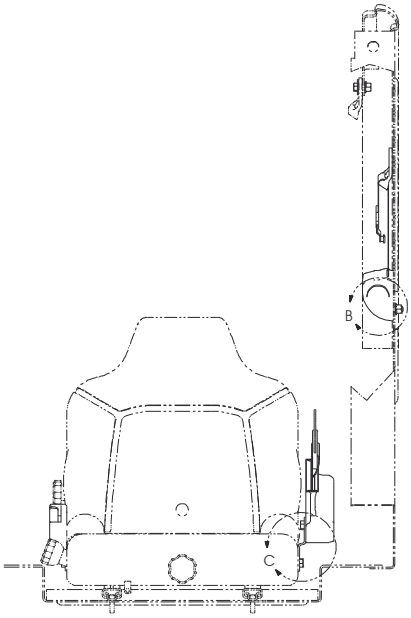

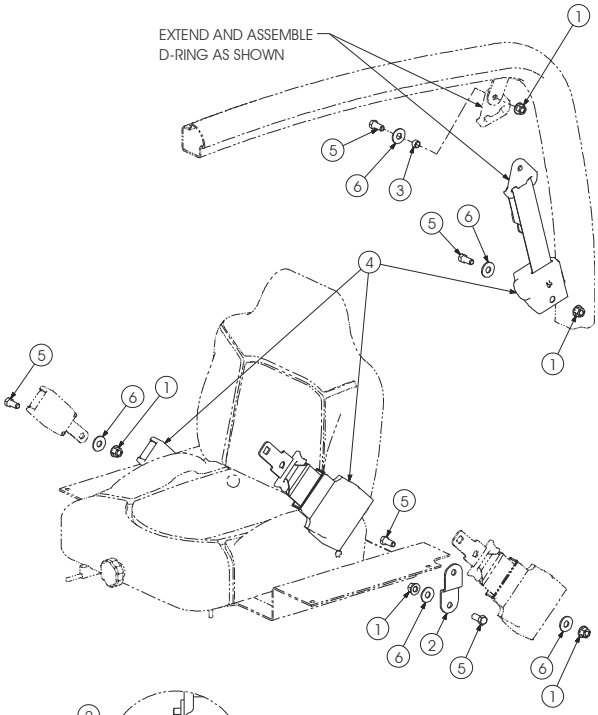

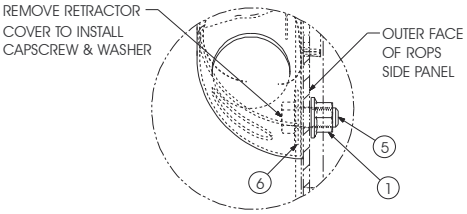

DETAIL B

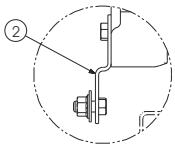

DETAIL C

243308_243309

Ref. No.	Part No.	Description	3-Point Restraint System Quantity 2" Seat Belt	Quantity 3" Seat Belt
1	081371	NUT/HEX LOCK 7/16	5	5
2	184007	TAB/RETRACTOR MOUNT	1	1
3	186834	SPACER	1	1
4	243284 a	RESTRAINT ASSEMBLY/2” THREE-POINT	1	-
	243289 a	RESTRAINT ASSEMBLY/3” THREE-POINT	-	1
5	650630	SCREW/CAP 7/16 X 1	5	5
6	654046	WASHER/FLAT 7/16	5	5

a) Restraint assemblies includes all associated hardware, except PN 184007.

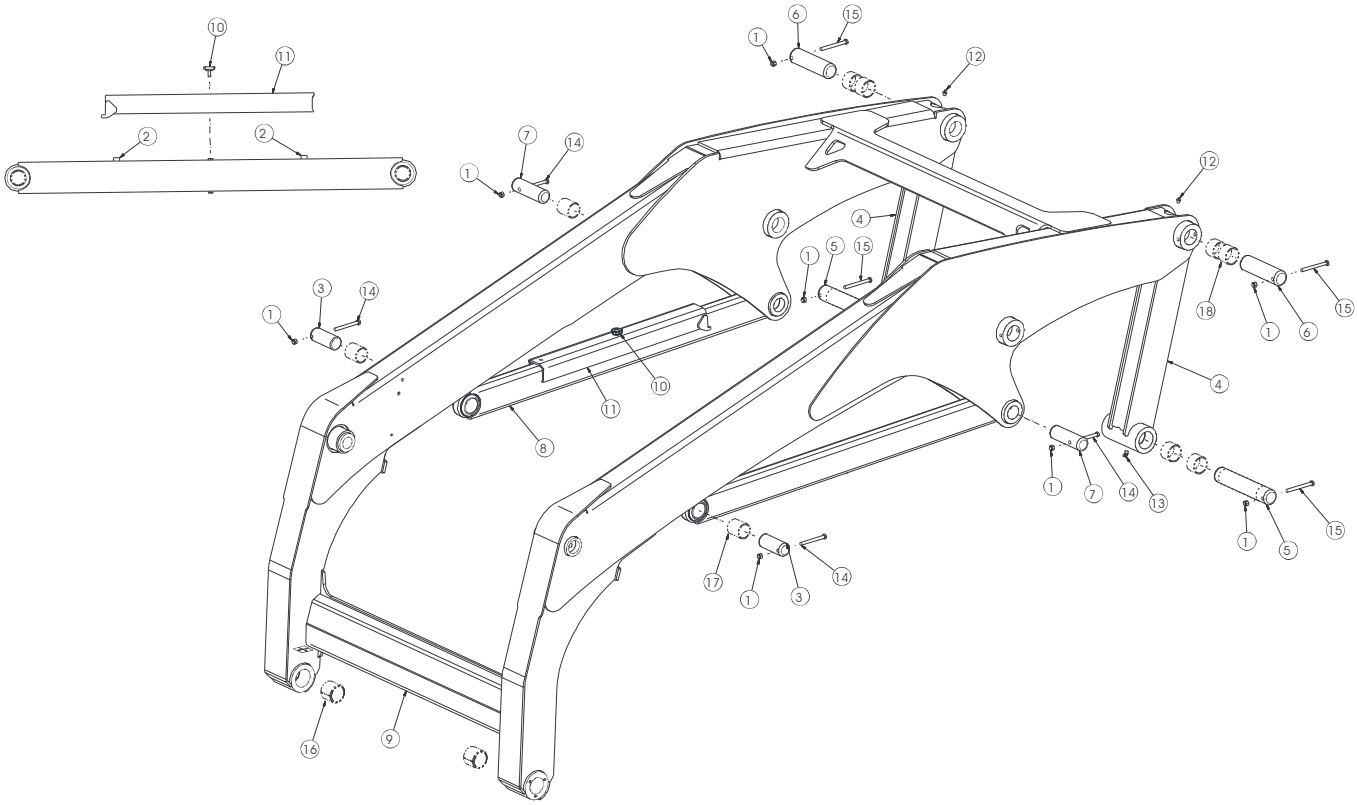
10
11
2
2
6
15
1
12
7
14
1
12
4
1
5
15
3
14
1
18
1
6
15
10
11
4
8
1
7
14
13
15
1
5
17
1
3
14
16
9

410426

Ref. No.	Part No.	Description	Quantity
1	067847	NUT/HEX LOCK 3/8	8
2	087854	PAD/ARM BRACE	2
3	50350357	PIN/TIMING LINK BASE	2
4	240388	LINK/REAR	2
5	240416	PIN/PIVOT 2 X 10-1/8	2
6	240419	PIN/PIVOT 2 X 7-1/8	2
7	241155	PIN/PIVOT 1-3/4 X 5-3/4	2
8	241198	LINK/TIMING	2
9	241525	LIFT ARM	1
10	242482	KNOB/CLAMPING 5/16 STUD	1
11	242881	LOCK/LIFT ARM	1
12	570002	FITTING/GREASE	2
13	570005	ZERK/GREASE 1/8 NPT	2
14	650729	SCREW/CAP 3/8 X 3-3/4	4
15	650742	SCREW/CAP 3/8 X 4	4
16	088101	BUSHING/LIFT CYLINDER (ATTACHMENT SYSTEM PIVOT)	2
17	139521	BUSHING/COMPOSITE 1.760 (MIDDLE PIVOT)	4
18	183423	BUSHING/COMPOSITE 2.00 (REAR PIVOT)	8

All-Tach®

V270 Models: SN 022090 and Up
V330 Models: SN 131496 and Up

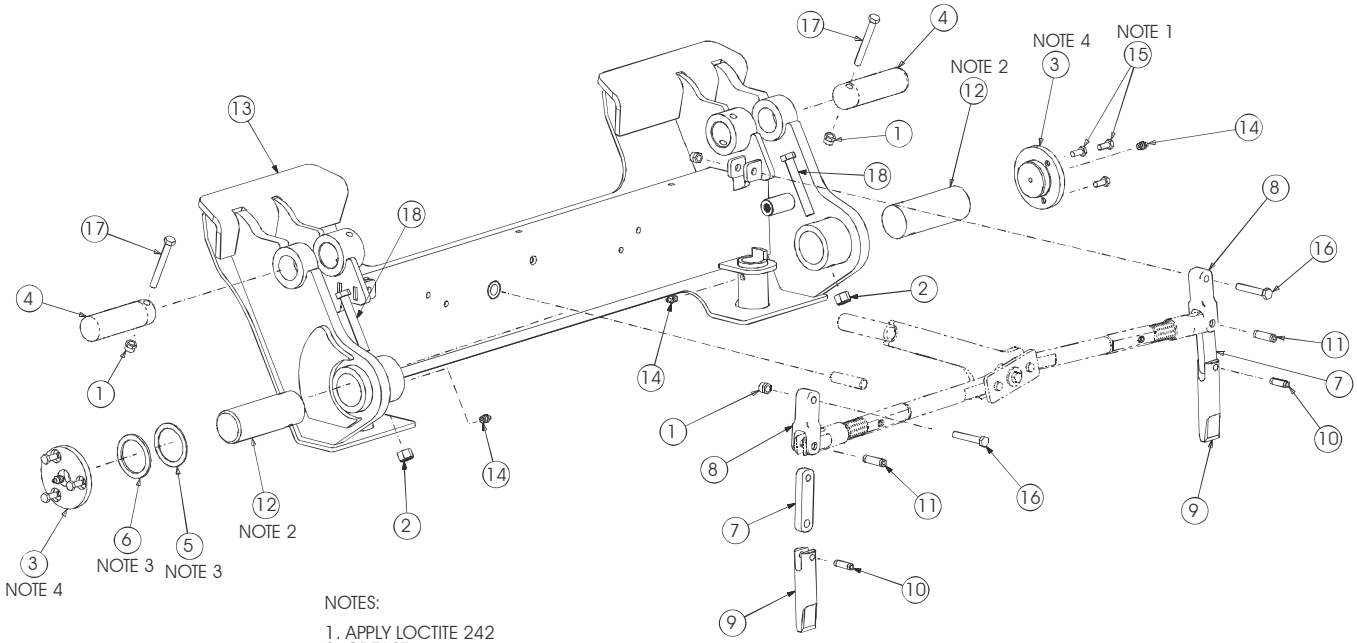

NOTES:

1. APPLY LOCTITE 242
2. GREASE
3. ADD SHIMS 136765 AND 136766 AS REQUIRED TO ACHIEVE A GAP BETWEEN THE LIFT ARM AND THE ALL-TACH, OF NO GREATER THEN 0.060"
4. APPLY RTV SEALANT

LATCH/LATCHING ACTUATION:
MECHANICAL/MANUAL (139094) REFERENCED

Actuator Group

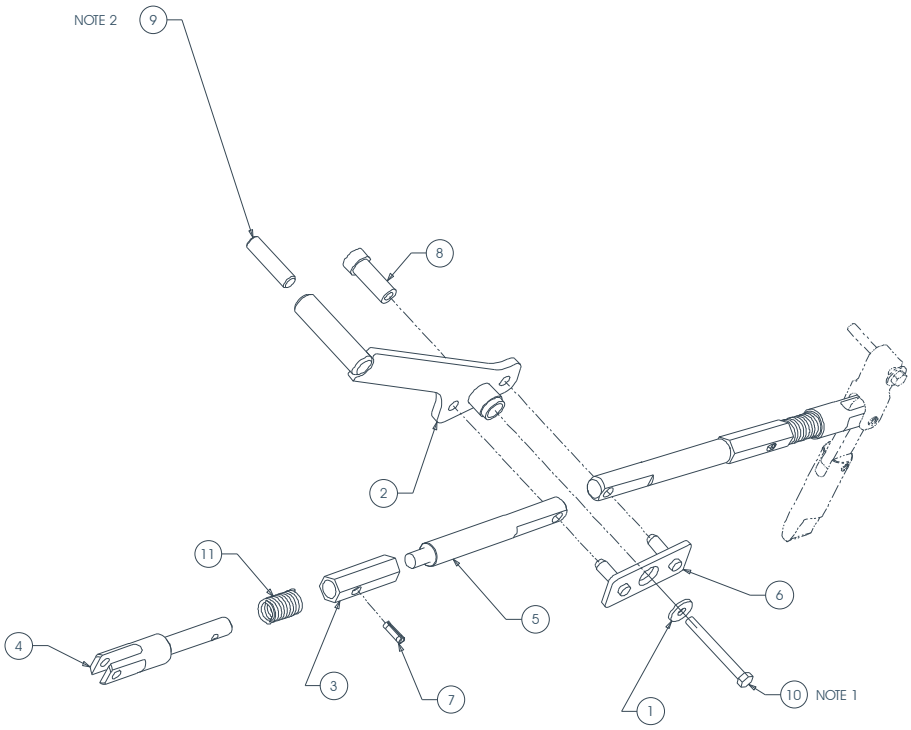

NOTES

1. APPLY LOCTITE 242
2. APPLY LOCTITE 680

410319_139094

Ref. No.	Part No.	Description	Quantity
1	067847	NUT/HEX LOCK 3/8	4
2	068034	NUT/HEX LOCK 1/2	2
3	132088	CAP/GREASE	2
4	135300	PIN	2
5	136765	SHIM/2.03 ID .06 THK	1
6	136766	SHIM/2.03 ID .13 THK	1
7	137168	LINK/PIN	2
8	137169	LINK/LATCH	2
9	137170	PIN/LATCH	2
10	137386	PIN/SPRING	2
11	137387	PIN/SPRING	2
12	50351485	PIN/ALL-TACH PIVOT	2
13	50352593	WELDMENT/ALL-TACH	1
14	570002	FITTING/GREASE	4
15	650486	SCREW/CAP 5/16 X 3/4	6
16	650535	SCREW/CAP 3/8 X 2-1/4	2
17	650629	SCREW/CAP 3/8 X 3-1/4	2
18	650650	SCREW/CAP 1/2 X 3-1/2	2

Ref. No.	Part No.	Description	Quantity Actuator Group
1	088912	WASHER/FLAT 13/32	1
2	137147	HANDLE	1
3	137158	LINK/SPRING STOP	2
4	137164	LINK/SPRING SLIDE	2
5	137167	LINK/ADJUSTABLE END	2
6	137379	PLATE/PIN	1
7	137385	PIN/SPRING	2
8	138752	PIVOT/HANDLE	1
9	138763	STOP/PIN	1
10	651614	SCREW/CAP 3/8 X 3-1/2	1
11	H8049	SPRING/STALK GUIDE	2

All-Tach®

V270 Models: SN 022089 and Before
V330 Models: SN 131495 and Before

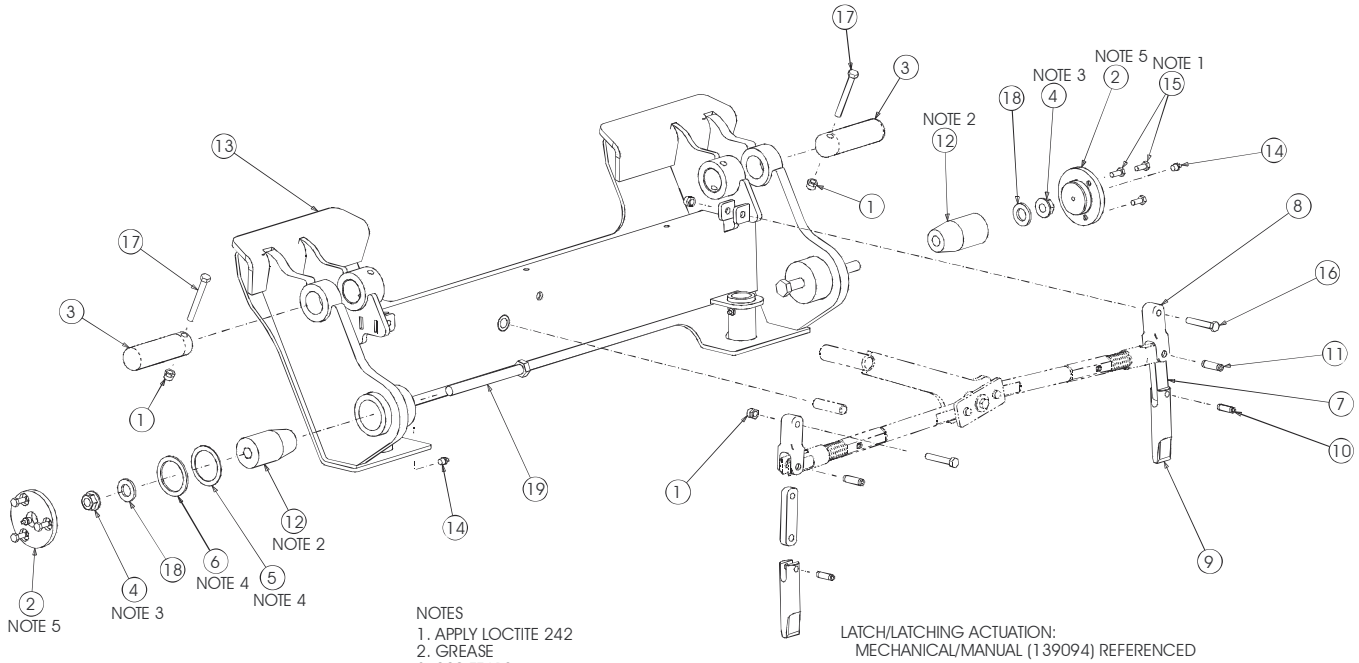

NOTES
1. APPLY LOCTITE 242
2. GREASE
3. 220 FT-LBS
4. ADD SHIMS 136765 AND 136766 AS REQUIRED TO ACHIEVE A GAP BETWEEN THE LIFT ARM AND THE ALL-TACH, OF NO GREATER THEN 0.060"
5. APPLY RTV SEALANT

LATCH/LATCHING ACTUATION:
MECHANICAL/MANUAL (139094) REFERENCED

Actuator Group

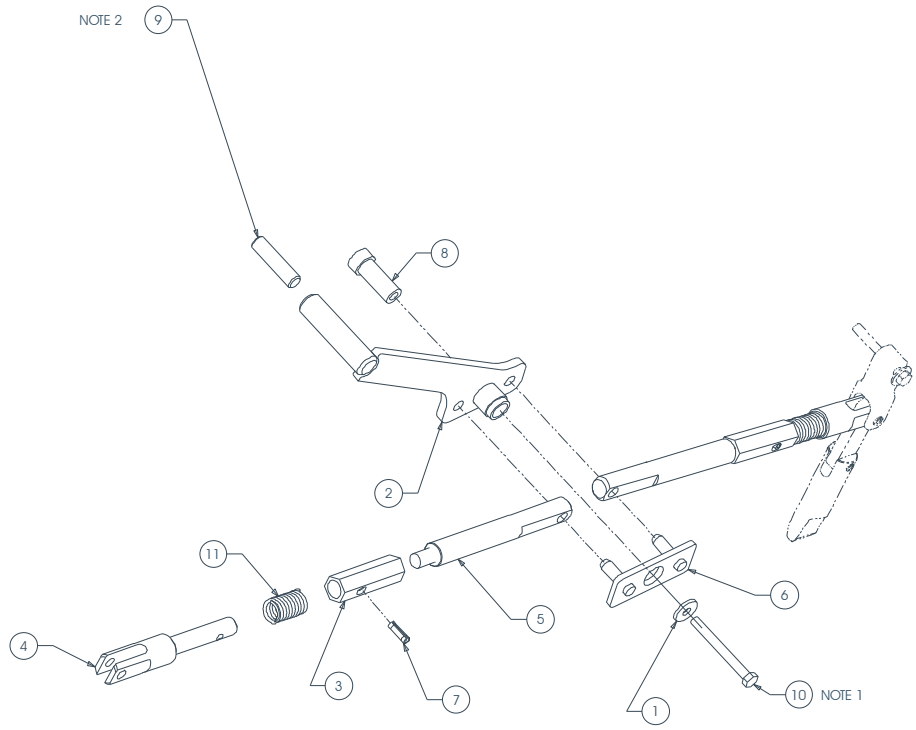

NOTES
1. APPLY LOCTITE 242
2. APPLY LOCTITE 680

410319_139094

Ref. No.	Part No.	Description	Quantity
1	067847	NUT/HEX LOCK 3/8	4
2	132088	CAP/GREASE	2
3	135300	PIN	2
4	136601	NUT/SPIRALOCK™ 5/8	2
5	136765	SHIM/2.03 ID .06 THK	1
6	136766	SHIM/2.03 ID .13 THK	1
7	137168	LINK/PIN	2
8	137169	LINK/LATCH	2
9	137170	PIN/LATCH	2
10	137386	PIN/SPRING	2
11	137387	PIN/SPRING	2
12	184715	PIN/ALL-TACH PIVOT	2
13	241724	WELDMENT/ALL-TACH	1
14	570002	FITTING/GREASE	4
15	650486	SCREW/CAP 5/16 X 3/4	6
16	650535	SCREW/CAP 3/8 X 2-1/4	2
17	650629	SCREW/CAP 3/8 X 3-1/4	2
18	651564	WASHER/FLAT HARDENED 3/4	2
19	651737	SCREW/CAP 5/8 X 6-1/2	2

Ref. No.	Part No.	Description	Quantity Actuator Group
1	088912	WASHER/FLAT 13/32	1
2	137147	HANDLE	1
3	137158	LINK/SPRING STOP	2
4	137164	LINK/SPRING SLIDE	2
5	137167	LINK/ADJUSTABLE END	2
6	137379	PLATE/PIN	1
7	137385	PIN/SPRING	2
8	138752	PIVOT/HANDLE	1
9	138763	STOP/PIN	1
10	651614	SCREW/CAP 3/8 X 3-1/2	1
11	H8049	SPRING/STALK GUIDE	2

Power-A-Tach®
Chassis Components

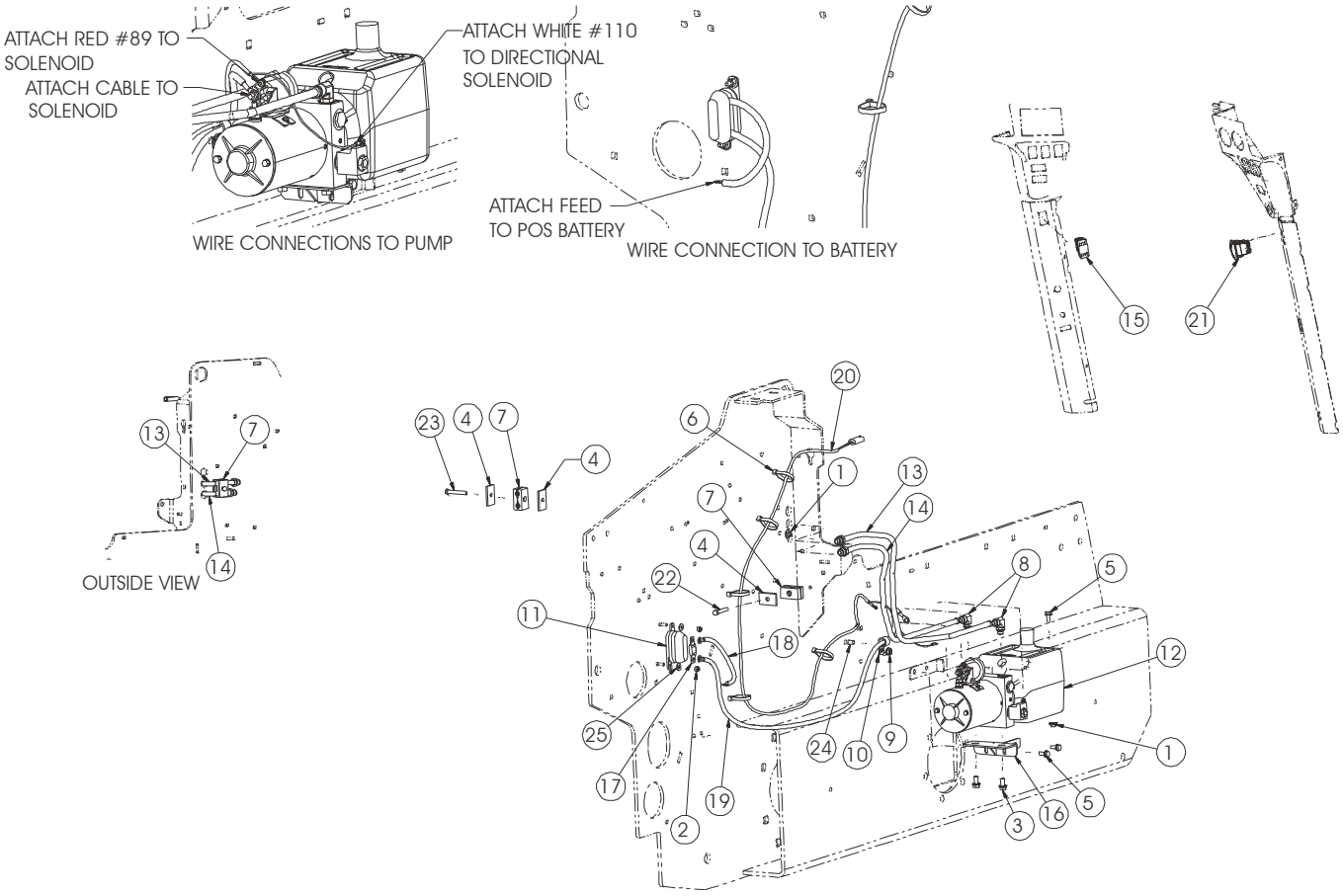

410427

Ref. No.	Part No.	Description	Quantity
1	070648	NUT/HEX LARGE FLANGE 5/16	3
2	071401	NUT/HEX INST LOCK 1/4	2
3	076588 b	SCREW/CAP LOCKING 3/8 X 3/4	2
	076589 a	SCREW/CAP FLANGE LOCK 3/8 X 1	2
4	079098	PLATE/TWIN COVER	3
5	081380	SCREW/CAP FLANGE LOCK 5/16 X 3/4	3
6	088467	TIE/NYLON 15-1/2	5
7	088904	CLAMP/TUBE 1/2	2
8	114824	FITTING/90º SAE06 X JIC08	2
9	134852	NUT/SPIRALOCK™ 3/8	1
10	136226	CLAMP/HOSE 3/4 X 13/32 HOLE	1
11	191192	HOLDER/FUSE/AMG	1
12	242617 c	UNIT/POWER/HYD	1
13	242707	TUBE/ALL-TACH/RIGHT	1
14	242708	TUBE/ALL-TACH/LEFT	1
15	242752	SWITCH/PWR ALL-TACH	1
16	243080	MOUNT/PUMP	1
17	243083	FUSE/175AMP/AMG	1
18	243100	CABLE/4GA 7-1/2	1
19	243104	CABLE/4GA 51.00	1
20	243107	HARNESS/ALL-TACH/CHASSIS	1
21	243567 b	SWITCH/POWER-A-TACH	1
	242379 a	SWITCH/POWER-A-TACH	1
22	650568	SCREW/CAP 5/16 X 2	1
23	650725	SCREW/CAP 5/16 X 2-1/4	1
24	651067	BOLT/CARRIAGE 3/8 X 1	1
25	654002	WASHER/FLAT 1/4	2

a) V270 Models: SN 021066 and Before
b) V270 Models: SN 021067 and Up. All V330 Models.
c) For breakdown see “Section B” of this manual.

Power-A-Tach®
Lift Arm Components

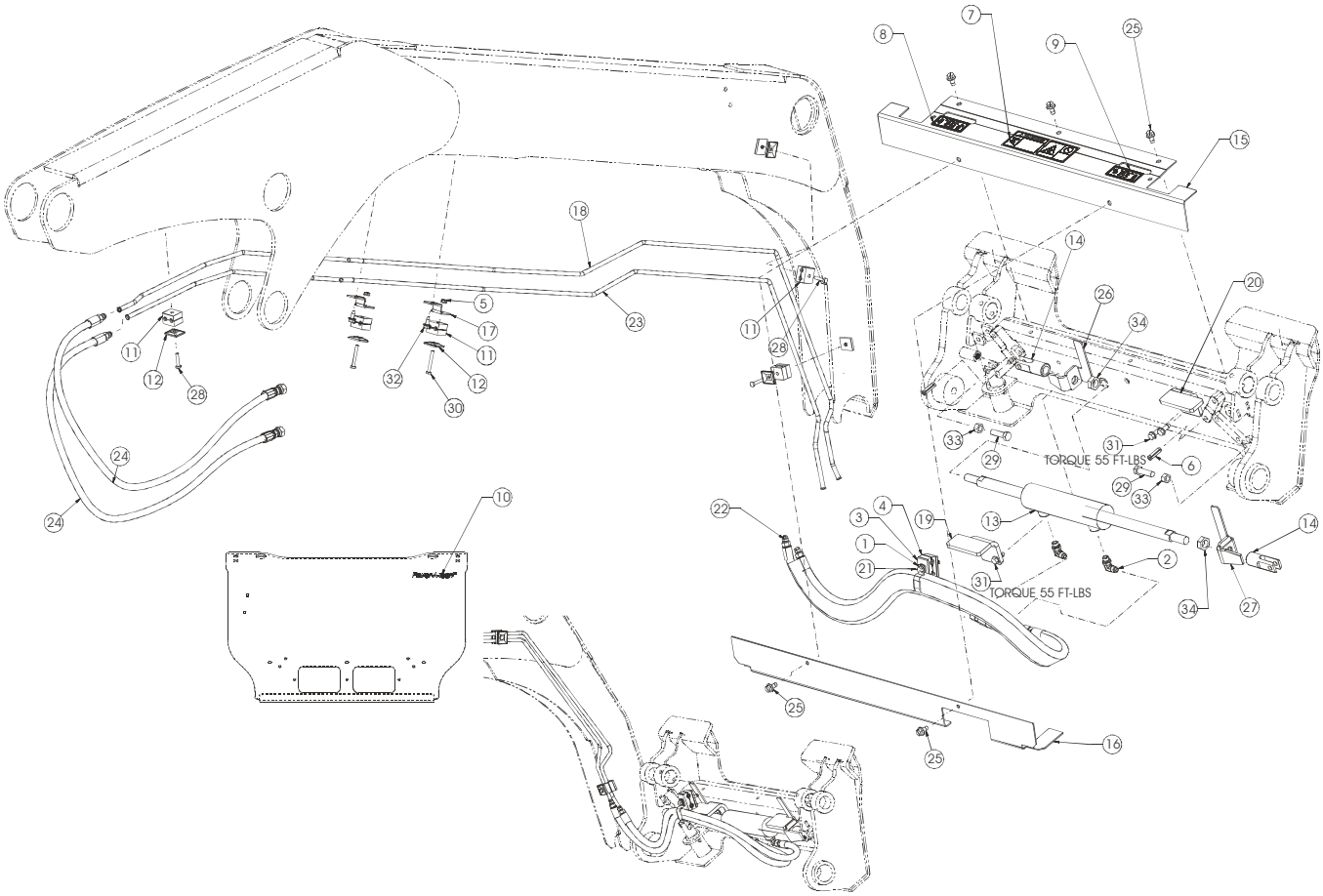

400513

Ref. No.	Part No.	Description	Quantity
1	055021 b	CLAMP/HOSE 3/4 X 0.41 HOLE	1
2	068938 b	FITTING/90° MJ06-MAORB06	2
	079026 a	FITTING/45º SAE06 X JIC06	2
3	079098 b	PLATE/TOP SIZE 2 TWIN FLAT	2
4	088904 b	CLAMP/TUBE 1/2 TWIN	1
5	134588	NUT/SPIRALOCK™ 1/4	2
6	137387	PIN/SPRING	2
7	139101	DECAL/POWER-A-TACH	1
8	139107	DECAL/LATCHING LEFT	1
9	139109	DECAL/LATCHING RIGHT	1
10	184357	DECAL/POWER-A-TACH	1
11	194309	CLAMP/DOUBLE TUBE 3/8	5
12	194380	PLATE/TWIN	5
13	241701	CYLINDER/HYD P-A-T	1
14	241711	LINK/SPRING SLIDE	2
15	241720	HYDRAULIC CYLINDER COVER/UPPER	1
16	241721	HYDRAULIC CYLINDER COVER/LOWER	1
17	242767	BRACKET/MTG/TUBE	2
18	242772	TUBE/ALL-TACH/LIFT ARM	1
19	243409 b	BRACKET/STOP	1
20	243415 b	BRACKET/STOP	1
21	244572	SCREW/HEX WASHER HEAD THREAD FORMING 5/16 X 2-1/4	1
22	244574 c	ASSY/HOSE/SLEEVE	1
	243591 b	HOSE/3000 PSI 52-1/2	1
	190923 a	HOSE/HYD P-A-T	1
	243596 b	HOSE/300 PSI 46-1/2	1
	272680 a	ALL-TACH/HOSE	1
	243600 b	SLEEVE/PROTECTIVE	1
23	272662	TUBE/POWER ALL-TACH	1
24	272688	ALL-TACH/HOSE	2
25	310-32411	SCREW/CAP SELF-TAPPING 3/8 X 3/4	5
26	50350107 c	FLAG/LEFT WELDMENT	1
	271467	FLAG/LEFT	1
	243411b	PLATE/STOP	1
27	50350108 c	FLAG/RIGHT/WELDMENT	1
	271502	FLAG/RIGHT	1
	243533 b	PLATE/STOP	1
28	650426	SCREW/CAP 1/4 X 1-1/4	3
29	650569 b	SCREW/CAP 1/2 X 1-3/4	2
30	650706	SCREW/CAP 1/4 X 2	2
31	650934 b	SCREW/TAPPING HEX WASHER HEAD THREAD CUTTING 3/8 X 1	4
32	651648	SCREW/TAPPING HEX WASHER HEAD THREAD ROLL 5/16 X 3/4	2
33	653018 b	NUT/HEX 1/2	2
34	653053	NUT/HEX JAM 3/4	2

a) V270 Models: SN 021066 and Before

b) V270 Models: SN 021067 and Up. All V330 Models

c) New hose and sleeve assy, PN 244574 replaces (b) note PN's below it. New right and left flag weldments, PN's 50350107 and 50350108 replace the 271467 and 271502 flag PN's along with the (b) note stop plate PN's below each weldment part number.

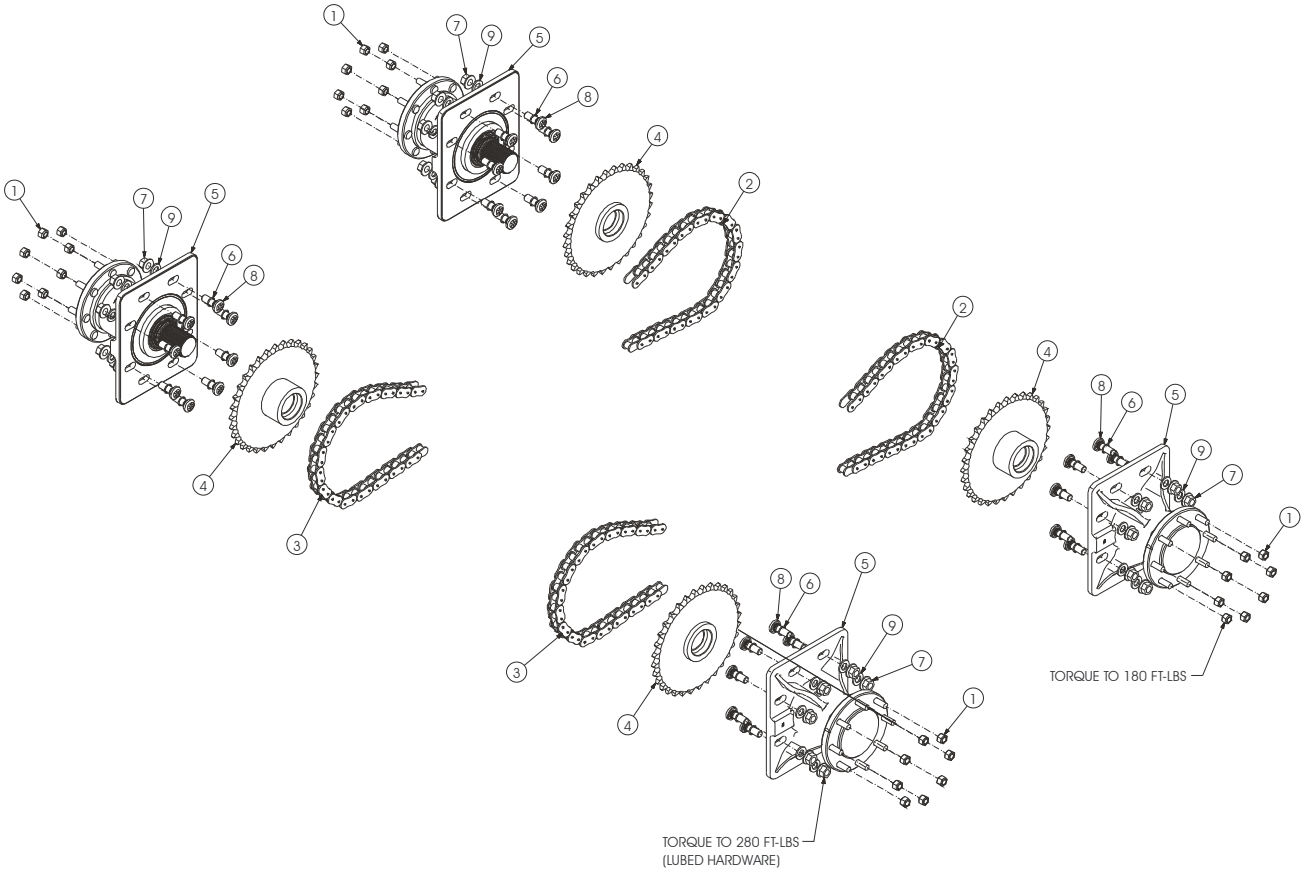

194750 Axle Assembly

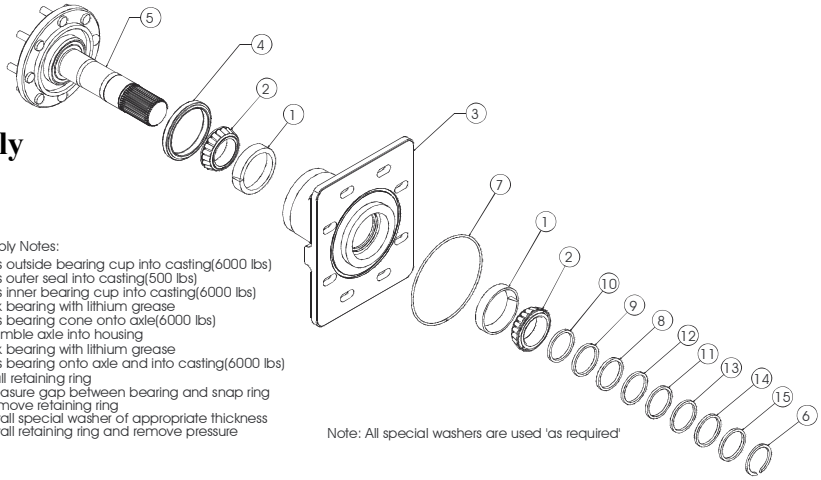

Assembly Notes:
1) Press outside bearing cup into casting(6000 lbs)
2) Press outer seal into casting(500 lbs)
3) Press inner bearing cup into casting(6000 lbs)
4) Pack bearing with lithium grease
5) Press bearing cone onto axle(6000 lbs)
6) Assemble axle into housing
7) Pack bearing with lithium grease
8) Press bearing onto axle and into casting(6000 lbs)
9) Install retaining ring
10) Measure gap between bearing and snap ring
11) Remove retaining ring
12) Install special washer of appropriate thickness
13) Install retaining ring and remove pressure

Note: All special washers are used 'as required'

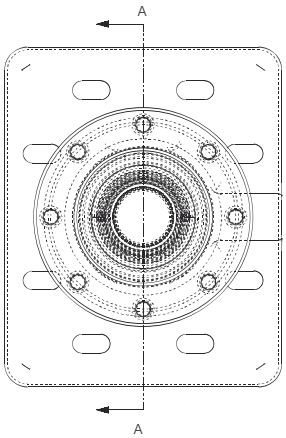

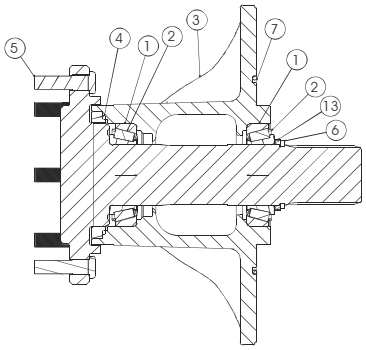

SECTION A-A

410375_194750

Ref. No.	Part No.	Description	Quantity
1	079152	NUT/HEX LUG 5/8	32
2	131606	CHAIN #100 X 58	2
	082489	LINK/PLAIN CONNECTING	1
3	131607	CHAIN #100 X 68	2
	082489	LINK/PLAIN CONNECTING	1
4	138298	ASSEMBLY/SPROCKET 100-32	4
5	194750	ASSEMBLY/AXLE	4
	137915	BOLT/WHEEL 5/8 X 2-3/8	32
6	50300766 b	O-RING 118 N70	32
7	50300777 b	NUT/HEX FLANGE TOP LOCK 3/4	32
	131609 a	NUT/SPIRALOCK™ 3/4	32
8	50351821 b	BOLT/AXLE 3/4 X 2.13	32
	137072 a	BOLT/CARRIAGE 3/4 X 2	32
9	651564	WASHER/FLAT HARDENED 3/4	32

a) V270 Models: SN 022117 and Before (see exemptions in note b)
a) V330 Models: SN 131523 and Before (see exemptions in note b)
b) V270 Models: SN 022118 and Up, and earlier SN's: 022115 and 022116.
b) V330 Models: SN 131524 and Up, and earlier SN's: 131502, 131511-131516 and 131521.

Ref. No.	Part No.	Description	Quantity 194750 Axle Assy
1	010-28854	CUP/BEARING	2
2	010-32401	CONE/BEARING	2
3	138759	HOUSING/AXLE/MACHINED	1
4	183784	SEAL/AXLE	1
5	320-32692	ASSEMBLY/AXLE & BOLT	1
6	350-32539	RETAINING RING/EXTERNAL	1
7	350-32542	O-RING 369 N70	1
8	400-32513	WASHER/SPECIAL .254	1
9	400-32514	WASHER/SPECIAL .250	1
10	400-32515	WASHER/SPECIAL .246	1
11	400-32521	WASHER/SPECIAL .234	1
12	400-32522	WASHER/SPECIAL .230	1
13	400-32523	WASHER/SPECIAL .226	1
14	400-32555	WASHER/SPECIAL .238	1
15	400-32556	WASHER/SPECIAL .242	1

V270 Models: SN 021951 and Up
V330 Models: SN 131401 and Up

GOVERNED ENGINE SPEED SPECIFICATIONS

SPEED SETTING	RPM	TOLERANCE
LOW IDLE, NO LOAD	1000	± 10 RPM
HIGH IDLE, NO LOAD	2500	± 10 RPM
HIGH, NO LOAD (EU ONLY)	2500	± 10 RPM
MANUFACTURER'S RATING*	2500	± 10 RPM

*THE MAXIMUM RPM UNDER LOAD WHEN THE GOVERNOR IS AT ITS FASTEST SETTING(OPEN)

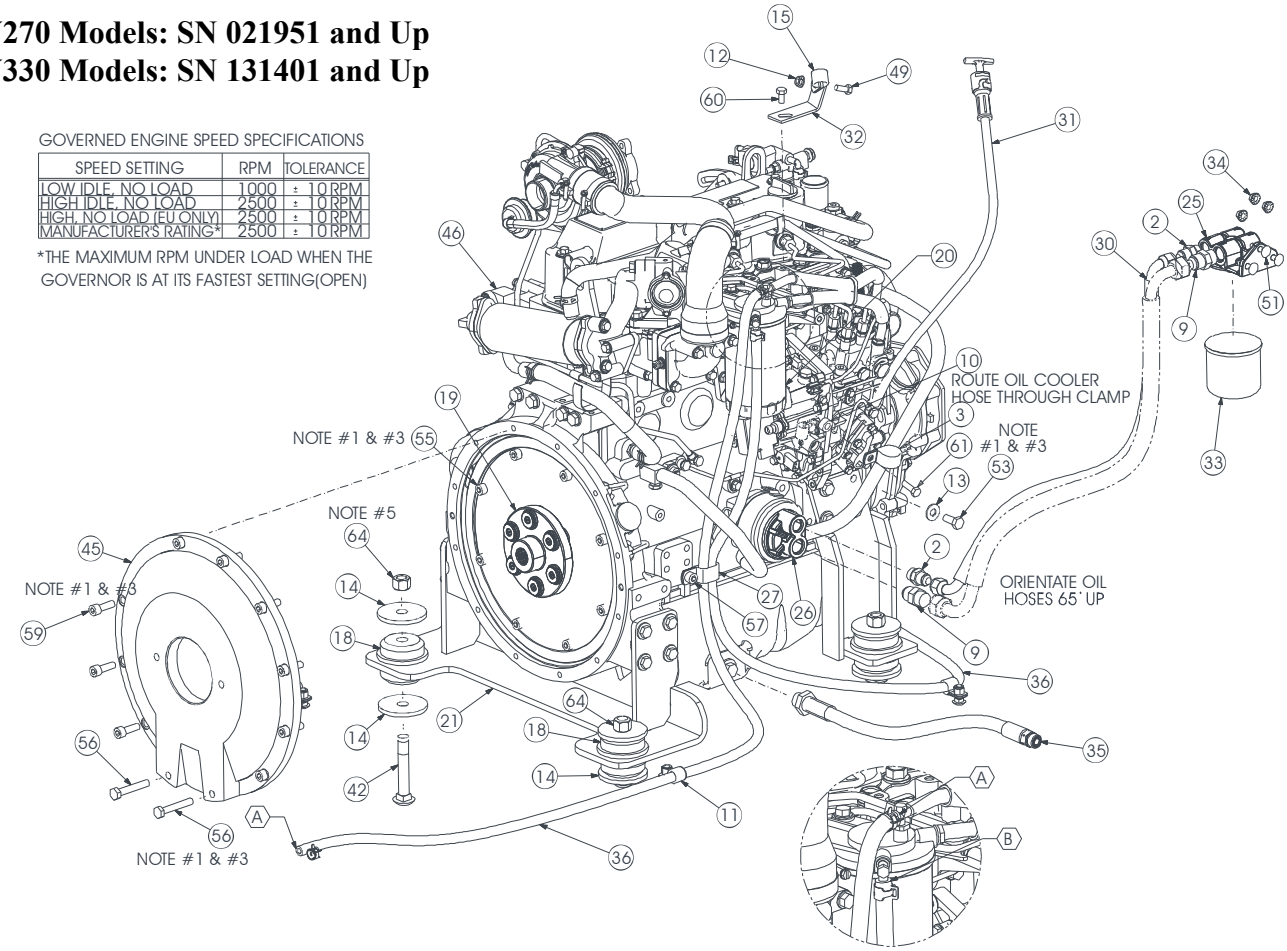

NOTES:

1. APPLY LOCTITE 242 OR EQUIVALENT
2. PIPE THREAD SEALANT
3. TORQUE TO 39 FT-LBS
4. RE-USE WASHER SUPPLIED WITH ENGINE OIL DRAIN PLUG
5. TORQUE TO 110 FT-LBS

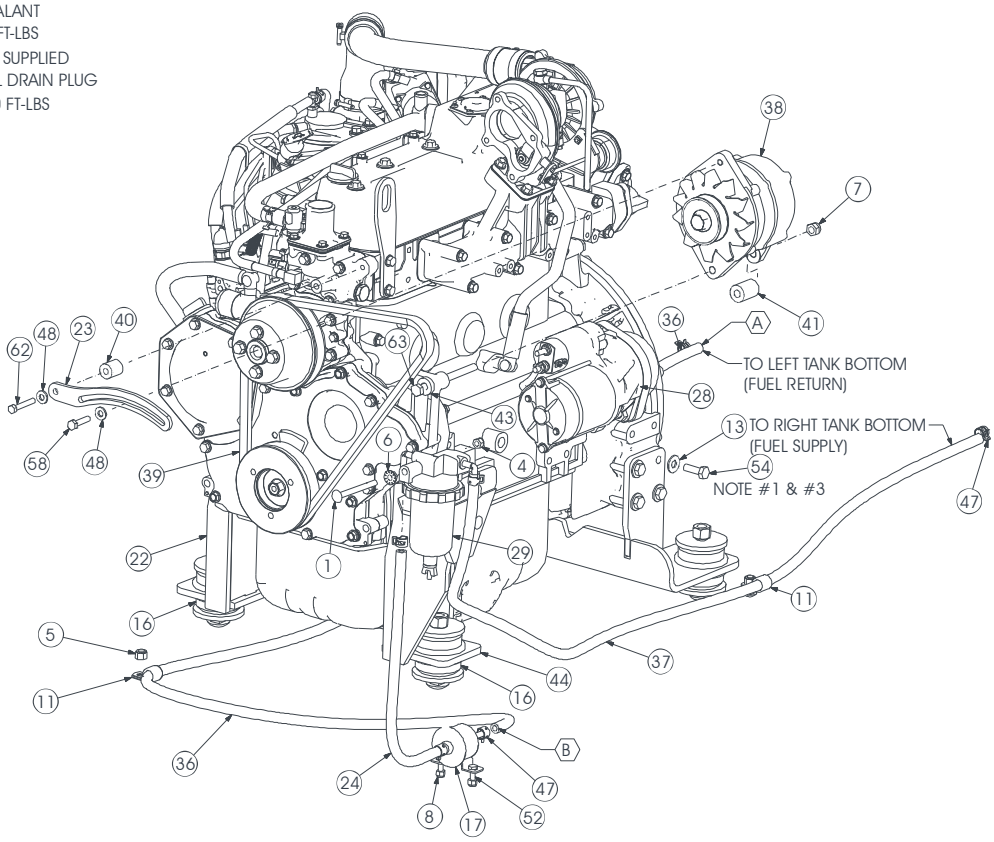

50450078

Ref. No.	Part No.	Description	Quantity
1	030-31842	BOLT/CARRIAGE 5/16 X 3-1/2	1
2	054626	FITTING/STRAIGHT MJ08-MORB08	2
3	058805	CLAMP/HOSE 1-1/8 X 13/32 HOLE	1
4	064260	NUT/HEX LOCK 5/16	1
5	067847	NUT/HEX LOCK 3/8	3
6	070648	NUT/LOCK FLANGE SERRATED 5/16	1
7	071246	NUT/LOCK M10	1
8	071401	NUT/HEX INST LOCK 1/4	2
9	072580	FITTING/STRAIGHT MJ10-MORB10	2
10	096511	SPACER 3/8	1
11	128007	CLAMP/HOSE 5/8 X 13/32 HOLE	3
12	131842	NUT/SPIRALOCK™ 5/16	1
13	132707	WASHER/HARD 3/8 PLAIN	16
14	135427	WASHER/SNUBBING	8
15	136226	CLAMP/HOSE 3/4 X 13/32 HOLE	1
16	137063	ISOLATOR	2
17	186308	PUMP ASSEMBLY/FUEL FEED	1
18	189640	ISOLATOR	2
19	192909	COUPLER	1
20	193024	FILTER/FUEL/YANMAR/1MICR	1
21	193105	ASSEMBLY/ENGINE MOUNT (FW END)	1
22	193131	ENGINE MOUNT/LEFT	1
23	193569	BRACKET/ALTERNATOR	1
24	187474	HOSE/FUEL 5/16 X 15	1
25	193971	MOUNT/FILTER	1
26	194068	ADAPTER/FILTER	1
	191651	O-RING 230 N70	1
27	194166	CLAMP/HOSE DOUBLE 5/8 X 7/16 HOLE	1
28	194316	STARTER/ENG/4TNV98	1
29	198139	SEPARATOR/FUEL/4TNV98	1
	203822	ELEMENT/FILTER	1
30	50352303	HOSE 1/2 X 30	1
31	195221	ASSEMBLY/DIPSTICK	1
32	195413	BRACKET/DIPSTICK	1
33	195568	FILTER/OIL/ENG/4TNV98	1
34	210-19470	NUT/LOCK FLANGE SERRATED 5/16	3
35	240021	HOSE ASSEMBLY/OIL DRAIN	1
36	241259	HOSE/FUEL 5/16 X 72	2
37	241284	HOSE/FUEL 5/16 X 83	1
38	241459	ALTERNATOR/ISKRA 100 A	1
39	241477	BELT/ALTERNATOR	1
40	241562	SPACER/ALTERNATOR	1
41	241563	SPACER/ALTERNATOR	1
42	241605	BOLT/CARRIAGE 5/8 X 4	4
43	241932	SPACER/ALTERNATOR	1
44	242959	MOUNT/ENGINE	1
45	245012	HOUSING/FLYWHEEL	1
46	276032	YANMAR/4TNV98T-ZXNMS2/IT	1
47	50350790	CLAMP/HOSE 14MM	8
48	612604	WASHER/FLAT M8	2
49	650486	SCREW/CAP 5/16 X 3/4	1
51	650745	BOLT/CARRIAGE 5/16 X 1-1/4	3
52	650835	SCREW/CAP 1/4 X 1	2
53	651394	SCREW/CAP M10 X 25 MM	8
54	651395	SCREW/CAP M10 X 30 MM	8
55	651535	SCREW/CAP SOCKET HEAD M10 X 16 MM	8
56	651773	SCREW/CAP M10 X 60 MM	2
57	651811	SCREW/CAP M10 X 20 MM	1
58	656002	SCREW/CAP M8 X 35 MM	1
59	656045	SCREW/CAP SOCKET HEAD M10 X 30 MM	9
60	656093	SCREW/CAP M8 X 16 MM	1
61	656105	SCREW/CAP M8 X 25 MM	1
62	656154	SCREW/CAP M8 X 45 MM	1
63	656173	SCREW/CAP M10 X 130 MM	1
64	L50081	NUT/HEX 5/8	4

V270 Models: SN 021950 and Before
V330 Models: SN 131400 and Before

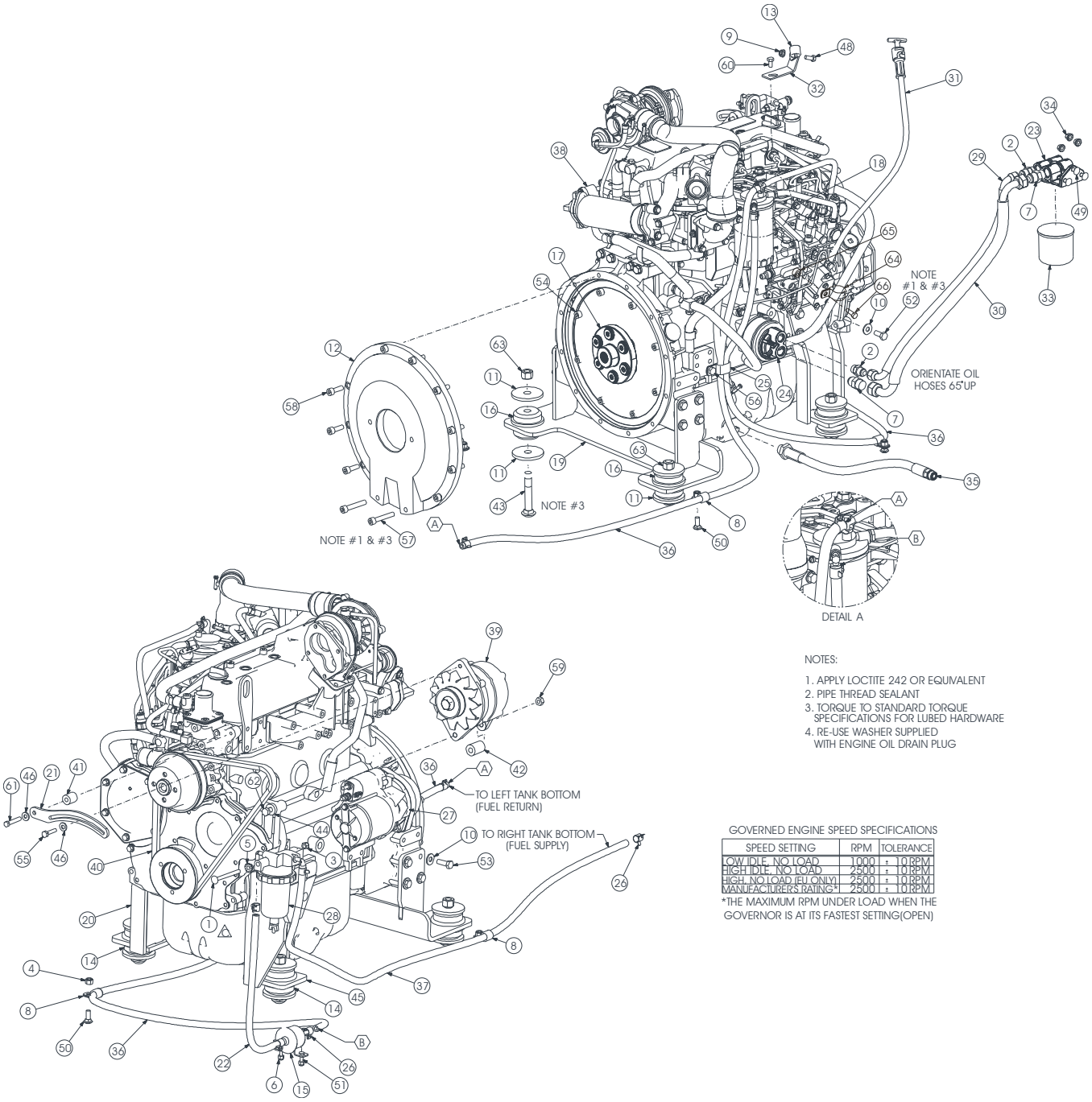

NOTES:

1. APPLY LOCTITE 242 OR EQUIVALENT
2. PIPE THREAD SEALANT
3. TORQUE TO STANDARD TORQUE SPECIFICATIONS FOR LUBED HARDWARE
4. RE-USE WASHER SUPPLIED WITH ENGINE OIL DRAIN PLUG

GOVERNED ENGINE SPEED SPECIFICATIONS

SPEED SETTING	RPM	TOLERANCE
LOW IDLE, NO LOAD	1000	± 10 RPM
HIGH IDLE, NO LOAD	2500	± 10 RPM
HIGH, NO LOAD (EU ONLY)	2500	± 10 RPM
MANUFACTURER'S RATING*1	2500	± 10 RPM

*THE MAXIMUM RPM UNDER LOAD WHEN THE GOVERNOR IS AT ITS FASTEST SETTING(OPEN)

410420

Ref. No.	Part No.	Description	Quantity
1	030-31842	BOLT/CARRIAGE 5/16 X 3-1/2	1
2	054626	FITTING/STRAIGHT MJ08-MORB08	2
3	064260	NUT/HEX LOCK 5/16	1
4	067847	NUT/HEX LOCK 3/8	3
5	070648	NUT/LOCK FLANGE SERRATED 5/16	1
6	071401	NUT/HEX INST LOCK 1/4	2
7	072580	FITTING/STRAIGHT MJ10-MORB10	2
8	128007	CLAMP/HOSE 5/8 X 13/32 HOLE	3
9	131842	NUT/SPIRALOCK™ 5/16	1
10	132707	WASHER/HARD 3/8 PLAIN	16
11	135427	WASHER/SNUBBING	8
12	245012	HOUSING/FLYWHEEL	1
13	136226	CLAMP/HOSE 3/4 X 13/32 HOLE	1
14	137063	ISOLATOR	2
15	186308	PUMP ASSEMBLY/FUEL FEED	1
16	189640	ISOLATOR	2
17	192909	COUPLER	1
18	193024	FILTER/FUEL/YANMAR/1MICR	1
19	193105	ASSEMBLY/ENGINE MOUNT (FW END)	1
20	193131	ENGINE MOUNT/LEFT	1
21	193569	BRACKET/ALTERNATOR	1
22	187474	HOSE/FUEL 5/16 X 15	1
23	193971	MOUNT/FILTER	1
24	194068	ADAPTER/FILTER	1
	191651	O-RING 230 N70	1
25	194166	CLAMP/HOSE DOUBLE 5/8 X 7/16 HOLE	1
26	50350790	CLAMP/HOSE 14 MM	8
27	194316	STARTER/ENG/4TNV98	1
28	194317	SEPARATOR/FUEL/4TNV98	1
29	50352303	HOSE 1/2 X 30	1
30	50352302 a	HOSE 5/8 X 30	1
31	195221	ASSEMBLY/DIPSTICK	1
32	195413	BRACKET/DIPSTICK	1
33	195568	FILTER/OIL/ENG/4TNV98	1
34	210-19470	NUT/LOCK FLANGE SERRATED 5/16	3
35	240021	HOSE ASSEMBLY/OIL DRAIN	1
36	241259	HOSE/FUEL 5/16 X 72	2
37	241284	HOSE/FUEL 5/16 X 83	1
38	241451	ENG/YANMAR 4TNV98T-ZNMS	1
39	241459	ALTERNATOR/ISKRA 100 A	1
40	241477	BELT/ALTERNATOR	1
41	241562	SPACER/ALTERNATOR	1
42	241563	SPACER/ALTERNATOR	1
43	241605	BOLT/CARRIAGE 5/8 X 4	4
44	241932	SPACER/ALTERNATOR	1
45	242959	MOUNT/ENGINE	1
46	612604	WASHER/FLAT M8	2
48	650486	SCREW/CAP 5/16 X 3/4	1
49	650745	BOLT/CARRIAGE 5/16 X 1-1/4	3
50	650704	BOLT/CARRIAGE 3/8 X 1	3
51	650835	SCREW/CAP 1/4 X 1	2
52	651394	SCREW/CAP M10 X 25 MM	8
53	651395	SCREW/CAP M10 X 30 MM	8
54	651535	SCREW/CAP SOCKET HEAD M10 X 16 MM	8
55	656002	SCREW/CAP M8 X 35 MM	1
56	651811	SCREW/CAP M10 X 20 MM	1
57	651773	SCREW/CAP M10 X 60 MM	2
58	656045	SCREW/CAP SOCKET HEAD M10 X 30 MM	9
59	071246	NUT/LOCK M10	1
60	656093	SCREW/CAP M8 X 16 MM	1
61	656154	SCREW/CAP M8 X 45 MM	1
62	656173	SCREW/CAP M10 X 130 MM	1
63	L50081	NUT/HEX 5/8	4
64	058805	CLAMP/HOSE 1-1/8 X 13/32 HOLE	1
65	096511	SPACER 3/8	2
66	656105	SCREW/CAP M8 X 25 MM	1

a) P/N 50352302 used only in non-high flow, standard auxiliary hydraulics skid-steer loaders.

V270 Models: SN 021951 and Up
V330 Models: SN 131401 and Up

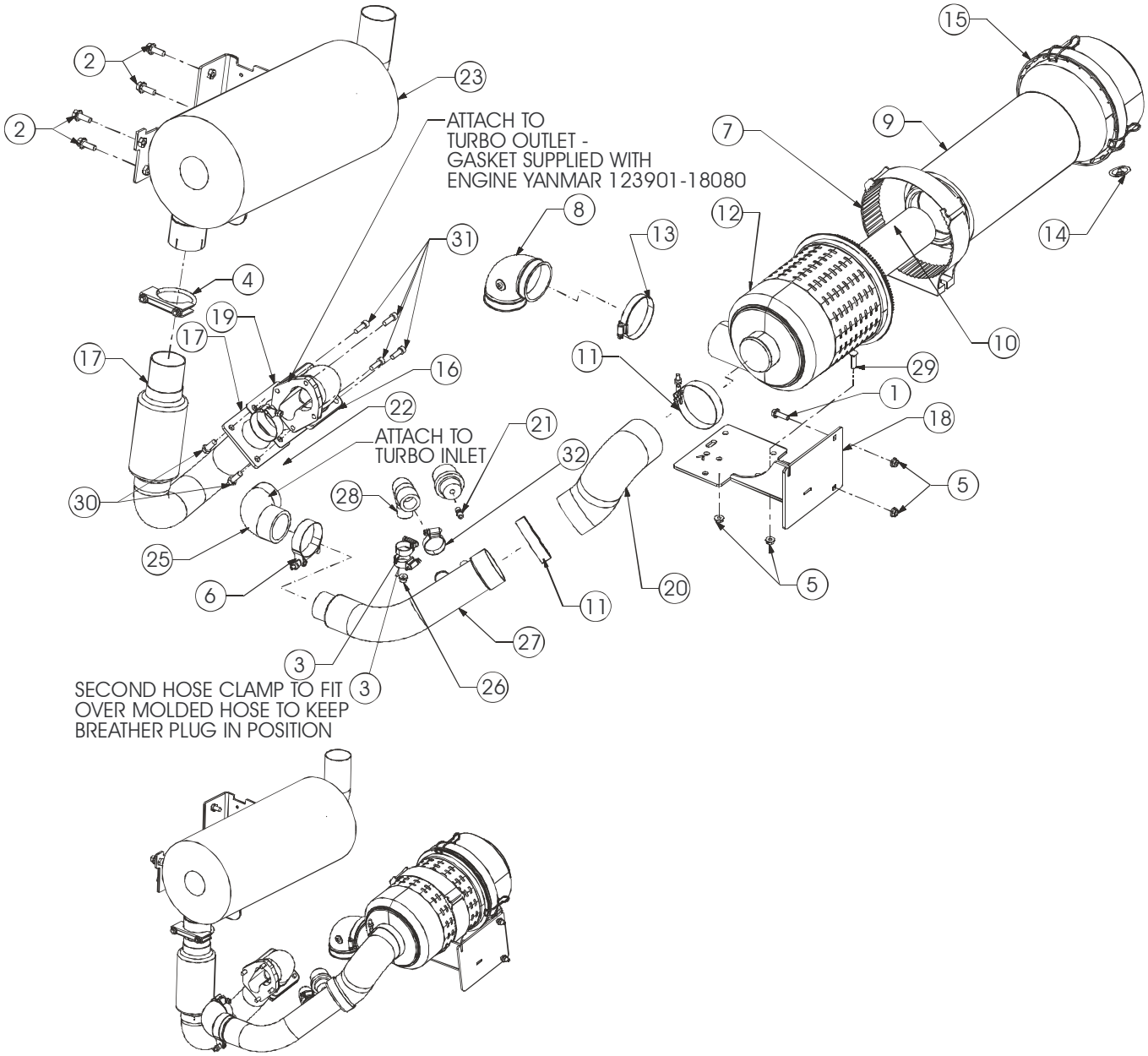

50450083

Ref. No.	Part No.	Description	Quantity
1	064354	SCREW/CAP SERRATED LOCK 5/16 X 1	2
2	076589	SCREW/CAP FLANGE LOCK 3/8 X 1	4
3	095955	CLAMP/HOSE #10	2
4	127428	CLAMP/MUFFLER 2-1/2	1
5	131842	NUT/SPIRALOCK™ 5/16	4
6	137049	CLAMP/T-BOLT 2-1/2	1
7	183998	CLAMP/AIR CLEANER	1
8	184099	ELBOW 90º W/ INDICATOR TAP	1
9	184146	FILTER ELEMENT/PRIMARY	1
10	184195	FILTER ELEMENT/SECONDARY	1
11	184605	CLAMP/T-BOLT 3-1/2	2
12	186014	ASSEMBLY/AIR CLEANER	1
13	187581	CLAMP/HOSE #44	1
14	187725	VALVE/VACUATOR	1
15	187726	END CAP/AIR CLEANER	1
16	192932	OUTLET/EXHAUST	1
17	192968	COUPLER/FLEX	1
18	193096	MOUNT/AIR CLEANER	1
19	193154	GASKET/FLANGE/EXHAUST	1
20	195125	HOSE/INTAKE/AIR	1
21	195261	ADAPTER/MP02-MP02 FILTER	1
22	240083	CLAMP/T-BOLT 2-3/8	1
23	242804	MUFFLER	1
24	420-35135	INDICATOR/RESTRICTION	1
25	50352793	ELBOW MOLDED/INTAKE/46MM	1
26	50353150 b	PLUG/SPACER BREATHER	1
27	50353195 b	TUBE/INTAKE	1
	50350877 a	TUBE/INTAKE	1
28	50353203 b	HOSE/BREATHER 5/8 TRANSITION	1
	50350880 a	HOSE/BREATHER	1
29	650745	BOLT/CARRIAGE 5/16 X 1-1/4	2
30	651297	SCREW/CAP 3/8 X 1	4
31	656123	SCREW/CAP SOCKET HEAD M8 X 25 MM	4
32	L75990 b	CLAMP/HOSE #16	1

a) V270 Models: SN 022219 and Before (see exemptions on note b). V330 Models: SN 131611 and Before (see exemptions in note b).
b) V270 Models: SN 022220 and Up, plus 22201-22217. V330 Models: SN 131612 and Up, plus 131536 and 131610.

V270 Models: SN 021950 and Before
V330 Models: SN 131400 and Before

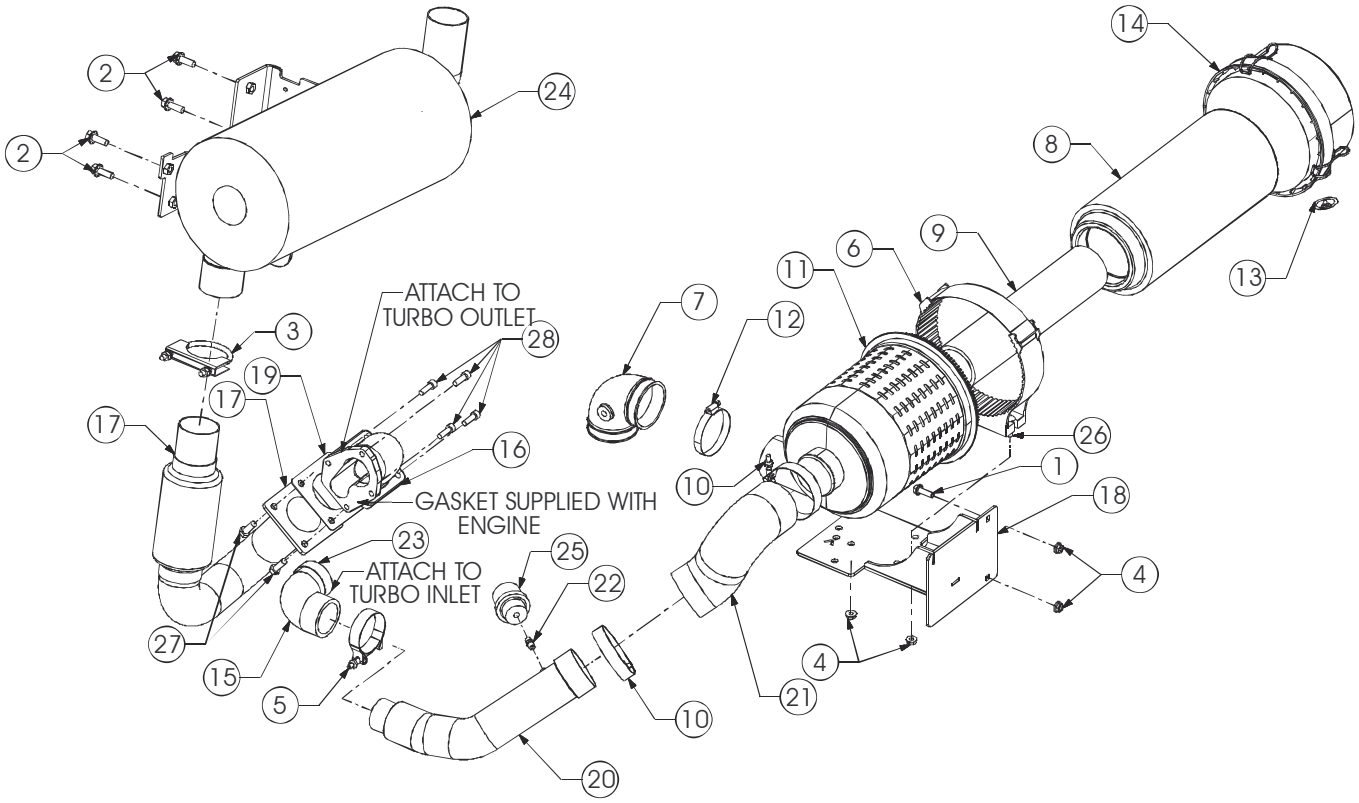

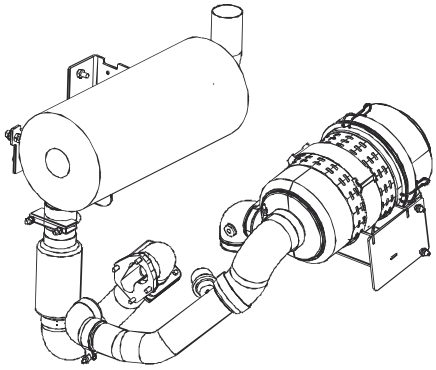

410088

Ref. No.	Part No.	Description	Quantity
1	064354	SCREW/CAP SERRATED LOCK 5/16 X 1	2
2	076589	SCREW/CAP FLANGE LOCK 3/8 X 1	4
3	127428	CLAMP/MUFFLER 2-1/2	1
4	131842	NUT/SPIRALOCK™ 5/16	4
5	137049	CLAMP/T-BOLT 2-1/2	1
6	183998	CLAMP/AIR CLEANER	1
7	184099	ELBOW 90º W/ INDICATOR TAP	1
8	184146	FILTER ELEMENT/PRIMARY	1
9	184195	FILTER ELEMENT/SECONDARY	1
10	184605	CLAMP/T BOLT 3-1/2	2
11	186014	ASSEMBLY/AIR CLEANER	1
12	187581	CLAMP/HOSE #44	1
13	187725	VACUATOR VALVE	1
14	187726	END CAP/AIR CLEANER	1
15	192739	ELBOW MOLDED/INTAKE/46MM	1
16	192932	OUTLET/EXHAUST	1
17	192968	COUPLER/FLEX	1
18	193096	MOUNT/AIR CLEANER	1
19	193154	GASKET/FLANGE/EXHAUST	1
20	194825	TUBE/INTAKE	1
21	195125	HOSE/INTAKE/AIR	1
22	195261	ADAPTER/2MP-2MP/FILTER	1
23	240083	CLAMP/T-BOLT 2-3/8	1
24	242804	MUFFLER	1
25	420-35135	INDICATOR/RESTRICTION	1
26	650745	BOLT/CARRIAGE 5/16 X 1-1/4	2
27	651297	SCREW/CAP 3/8 X 1	4
28	656123	SCREW/CAP SOCKET HEAD M8 X 25 MM	4

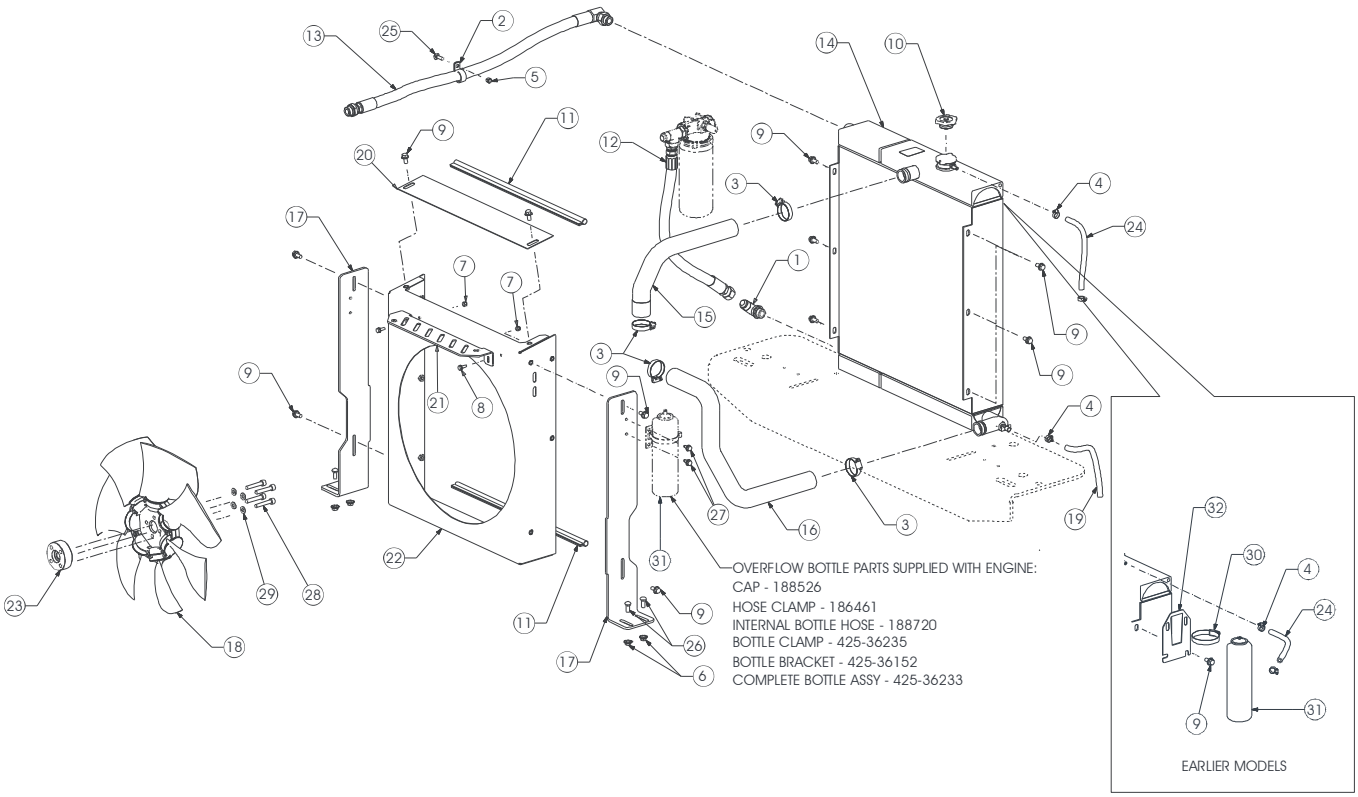

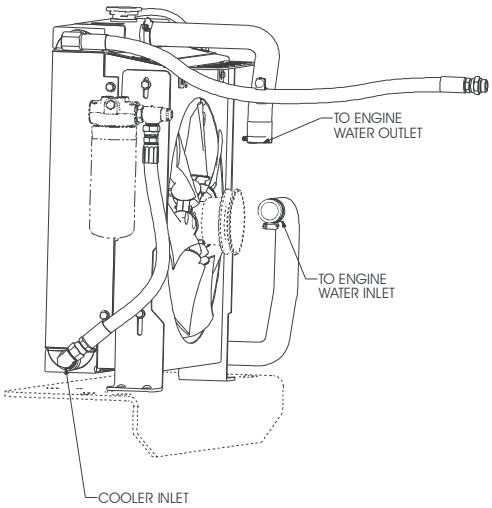

410395_410595

Ref. No.	Part No.	Description	Quantity
1	055005 a	FITTING/90° MJ12 X MAORB12	1
2	058805	CLAMP/HOSE 1-1/8 X 13/32 HOLE	1
3	061946	CLAMP/HOSE #24 SAE	4
4	062023	CLAMP/HOSE #M5	3
5	064260	NUT/HEX INST LOCK 5/16	1
6	070856	NUT/LOCK SERRATED FLANGE 3/8	4
7	071401	NUT/HEX LOCK 1/4	2
8	072916	SCREW/CAP HEX FLANGE LOCK 1/4 X 3/4	2
9	076588	SCREW/CAP HEX FLANGE 3/8 X 3/4	11
10	184541	CAP/RADIATOR	1
11	190282	SEAL/BULB	2
12	193709 a	HOSE/MEDIUM PRESSURE 3/4 X 23-1/2	1
13	240463	HOSE/OUTLET/COOLER	1
14	241014	EXCHANGER/HEAT	1
15	241133	HOSE/RADIATOR/UPPER	1
16	241604	HOSE/RADIATOR/LOWER	1
17	241618	PLATE/COOLER MOUNT	2
18	242350	FAN/20/2Z/25	1
19	242554	HOSE/FUEL 3/8 X 15	1
20	244056	PLATE/COVER	1
21	244059	FLANGE/COOLER COVER	1
22	244802 c	SHROUD 20.00 FAN	1
	242432 b	SHROUD 20-3/4 FAN	1
23	273038	SPACER/FAN	1
24	50352101 e	HOSE/FUEL 5/16 X 13	1
	187474 d	HOSE/FUEL 5/16 X 15	1
25	650573	BOLT/CARRIAGE 5/16 X 1	1
26	650704	BOLT/CARRIAGE 3/8 X 1	4
27	651648 e	SCREW/TAPPING HEX WASHER HEAD THREAD ROLL 5/16 X 3/4	2
28	651776	SCREW/CAP SOCKET HEAD M10 X 55 MM	4
29	656133	WASHER/FLAT M10	4
30	087850 d	CLAMP/HOSE #40	1
31	425-36233 e	ASSY/WATER BOTTLE COMPLETE (SEE DRAWING FOR SERVICE PARTS)	1
	190845 d	BOTTLE/OVERFLOW	1
32	241974 d	BRACKET/MTNG/COOLER/BURP	1

a) When ordering the P/N 193709 pressure hose, also order the P/N 055005 90° fitting, if the existing hose has a 90° elbow and 90° swivel fitting.
b) V270 Models: SN 021600 and Before
c) V270 Models: SN 021601 and Up. All V330 Models.
d) V270 Models: SN 022037 and Before (see exemptions in note e). V330 Models: SN 131458 and Before (see exemptions in note e).
e) V270 Models: SN 022038 and Up, plus 022029, 022032 and 022033. V330 Models: SN 131459 and Up, plus 131444, 131450 and 131456

Single-Speed

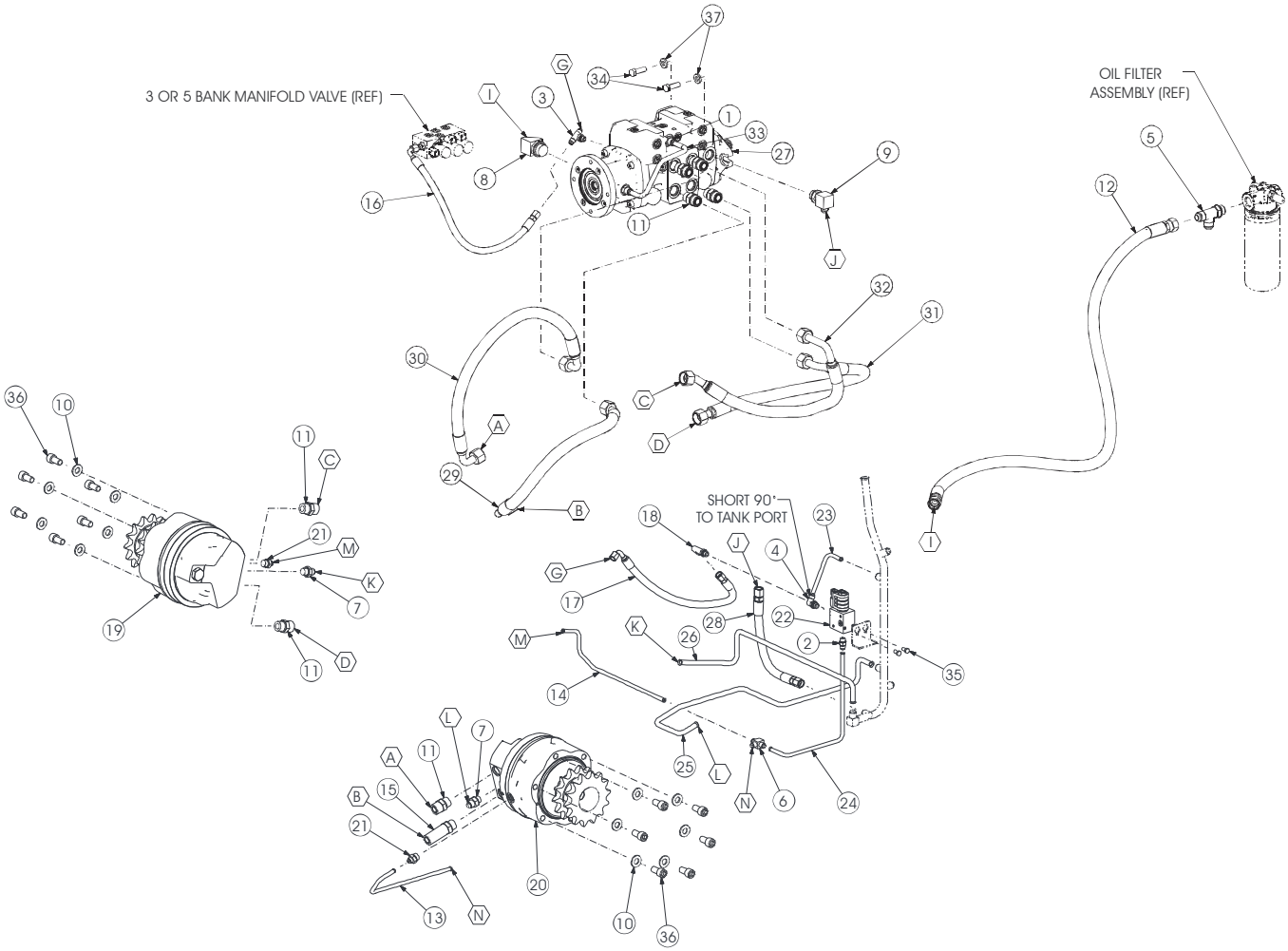

410331

Ref. No.	Part No.	Description	Quantity Single-Speed
1	054626	FITTING/STRAIGHT MJ08-MORB08	2
2	054994	FITTING/STRAIGHT MJ06 X MAORB06	1
3	50301000 d	FITTING/TEE BR MJ06-MJ06-MAORB08	1
	055981 bc	FITTING/TEE JIC06 X SAE06 X JIC06	1
4	068938	FITTING/90º MJ06 X MAORB06	1
5	079092	FITTING/TEE SAE12 X JIC12 X JIC12	1
6	087393	FITTING/TEE JIC06 X JIC06 X JIC06	1
7	089099	FITTING/STRAIGHT 6400 8-10	2
8	121773	FITTING/45° SAE16 X JIC12	1
9	121775	FITTING/90° SAE12 X JIC08	1
10	135773	WASHER/FLAT HARDENED 5/8	12
11	135928	FITTING/STRAIGHT SAE12 X FF12	7
12	194004	HOSE/CHARGE INLET	1
13	194052	TUBE/BRAKE LEFT	1
14	194059	TUBE/BRAKE RIGHT	1
15	194118	FITTING/STRAIGHT SAE12 X JIC12 LONG	1
16	194126	HOSE/MEDIUM PRESSURE 3/8 X 26	1
17	194210	HOSE/HIGH PRESSURE 3/8 X 28-1/2	1
18	194732	FITTING/90° SAE06 X JIC06	1
19	195101 a	MOTOR/SINGLE SPEED RIGHT	1
20	195102 a	MOTOR/SINGLE SPEED LEFT	1
21	230-24749	FITTING/STRAIGHT 9/16 JIC X 3/4 SAE	2
22	240056 a	VALVE/BRAKE	1
23	240418	TUBE/BRAKE DRAIN	1
24	241323	TUBE/BRAKE LEFT	1
25	241340	TUBE/DRAIN LEFT MOTOR	1
26	241364	TUBE/DRAIN RIGHT MOTOR	1
27	50351006 ad	PUMP/TANDEM A22	1
	245149 ac	PUMP/TANDEM	1
	241978 ab	PUMP/TANDEM	1
28	242378	HOSE/MEDIUM PRESSURE 1/2 X 15	1
29	195141	HOSE/HIGH PRESSURE 3/4 X 30-5/8	1
30	242488	HOSE/HIGH PRESSURE 3/4 X 32-3/4	1
31	242504	HOSE/HIGH PRESSURE 3/4 X 30-1/4	1
32	242505	HOSE/HIGH PRESSURE 3/4 X 28-1/4	1
33	242506	TUBE/CHARGE	1
34	650453	SCREW/CAP 1/2 X 1-1/2	2
35	650485	SCREW/CAP 5/16 X 5/8	2
36	651620	SCREW/CAP SOCKET HEAD M16 X 30 MM	12
37	P471548	WASHER/FLAT 1/2	2

a) For breakdown see “Section B” of this manual.
b) V270 Models: SN 021408 and Before (see exemptions in note c)
c) V270 Models: SN 021409-022219, plus earlier SN’s: 021358/021369/021370/021371/021372/021378/021379/021380/021381/021385/021386/021388/021389/021390/021391/021392/021393/021394/021395/021396/021401/021402/021404/021405. V330 Models: SN 131624 and Before.
d) V270 Models: SN 022220 and Up. V330 Models: SN 131625 and Up.

Two-Speed

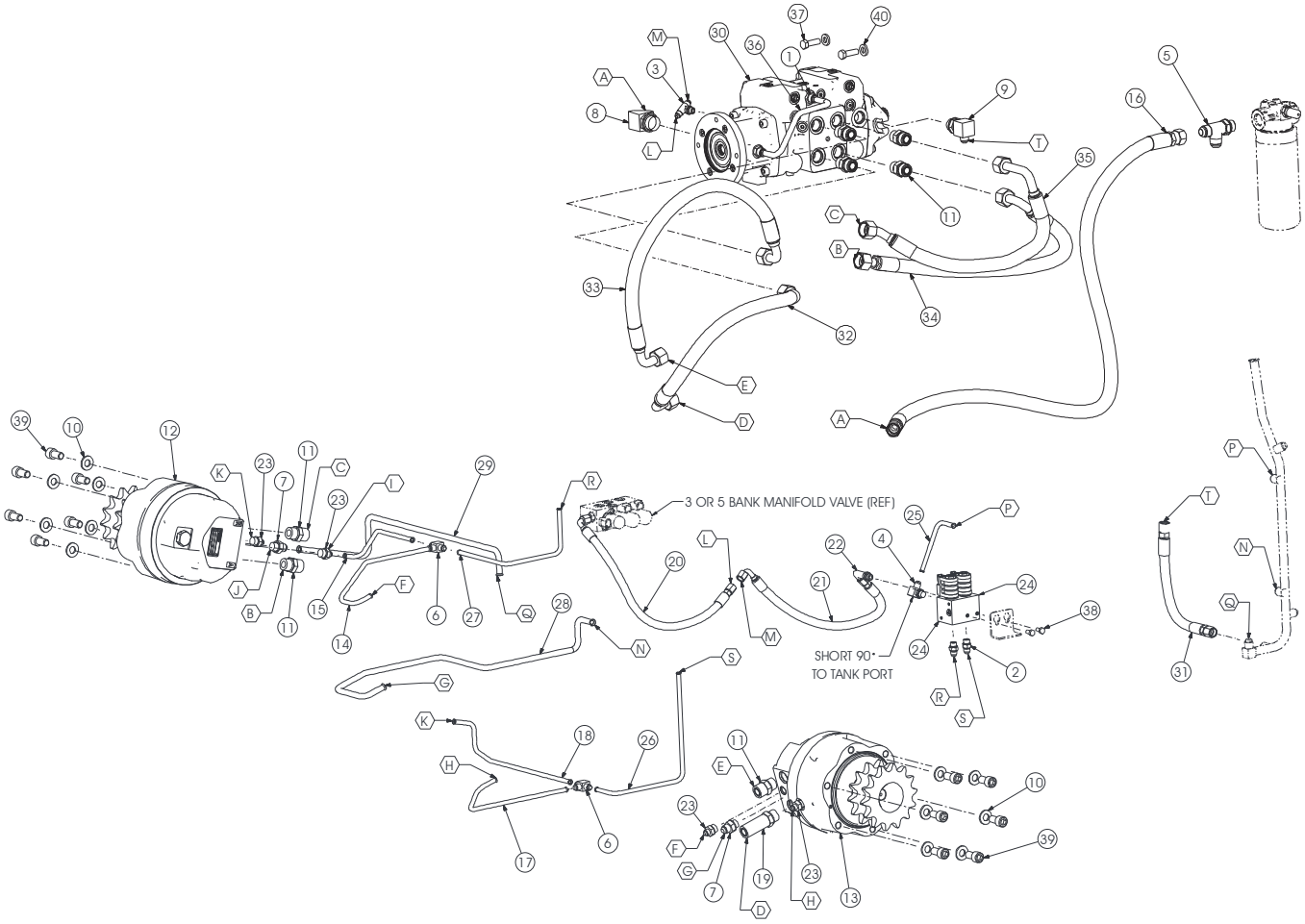

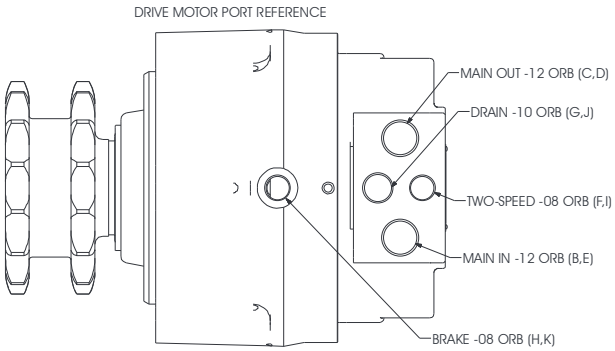

410315

Ref. No.	Part No.	Description	Quantity Two-Speed
1	054626	FITTING/STRAIGHT MJ08-MORB08	2
2	054994	FITTING/STRAIGHT MJ06 X MAORB06	2
3	50301000 d	FITTING/TEE BR MJ06-MJ06-MAORB08	1
	055981 bc	FITTING/TEE JIC06 X SAE06 X JIC06	1
4	068938	FITTING/90° MB06 X MJ06	1
5	079092	FITTING/TEE SAE12 X JIC12 X JIC12	1
6	087393	FITTING/TEE JIC06 X JIC06 X JIC06	2
7	089099	FITTING/STRAIGHT 6400 8-10	2
8	121773	FITTING/45° SAE16 X JIC12	1
9	121775	FITTING/90° SAE12 X JIC08	1
10	135773	WASHER/FLAT HARDENED 5/8	12
11	135928	FITTING/STRAIGHT SAE12 X FF12	7
12	193674 a	MOTOR/TWO-SPEED RIGHT	1
13	193675 a	MOTOR/TWO-SPEED LEFT	1
14	244983 c	TUBE/TWO-SPEED LEFT	1
	193773 b	TUBE/TWO-SPEED LEFT	1
15	244985 c	TUBE/TWO-SPEED RIGHT	1
	193776 b	TUBE/TWO-SPEED RIGHT	1
16	194004	HOSE/CHARGE INLET	1
17	194052	TUBE/BRAKE LEFT	1
18	194059	TUBE/BRAKE RIGHT	1
19	194118	FITTING/STRAIGHT SAE12 X JIC12 LONG	1
20	194126	HOSE/MEDIUM PRESSURE 3/8 X 26	1
21	194210	HOSE/HIGH PRESSURE 3/8 X 28-1/2	1
22	194732	FITTING/90° SAE06 X JIC06	1
23	230-24749	FITTING/STRAIGHT 9/16 JIC X 3/4 SAE	4
24	240057 a	VALVE/BRAKE TWO-SPEED	1
25	240418	TUBE/BRAKE DRAIN	1
26	241323	TUBE/BRAKE LEFT	1
27	245236 c	TUBE/CASE DRAIN	1
	241325 b	TUBE/CASE DRAIN	1
28	241340	TUBE/DRAIN LEFT MOTOR	1
29	241364	TUBE/DRAIN RIGHT MOTOR	1
30	50351006 ad	PUMP/TANDEM A22	1
	245149 ac	PUMP/TANDEM	1
	241978 ab	PUMP/TANDEM	1
31	242378	HOSE/MEDIUM PRESSURE 1/2 X 15	1
32	195141	HOSE/HIGH PRESSURE 3/4 X 30-5/8	1
33	242488	HOSE/HIGH PRESSURE 3/4 X 32-3/4	1
34	242504	HOSE/HIGH PRESSURE 3/4 X 30-1/4	1
35	242505	HOSE/HIGH PRESSURE 3/4 X 28-1/4	1
36	242506	TUBE/CHARGE	1
37	650453	SCREW/CAP 1/2 X 1-1/2	2
38	650485	SCREW/CAP 5/16 X 5/8	2
39	651620	SCREW/CAP SOCKET HEAD M16 X 30 MM	12
40	P471548	WASHER/FLAT 1/2	2

a) For breakdown see “Section B” of this manual.
b) V270 Models: SN 021408 and Before (see exemptions in note c)
c) V270 Models: SN 021409-022219, plus earlier SN’s: 021358/021369/021370/021371/021372/021378/021379/021380/021381/021385/021386/021388/021389/021390/021391/021392/021393/021394/021395/021396/021401/021402/021404/021405. V330 Models: SN 131624 and Before.
c) PN’s 244983, 244985 and 245236 are current and not affected by the SN break in the ‘note c’ text above.
d) V270 Models: SN 022220 and Up. V330 Models: SN 131625 and Up.

V330 Models

V270 Models: SN 021601 and Up

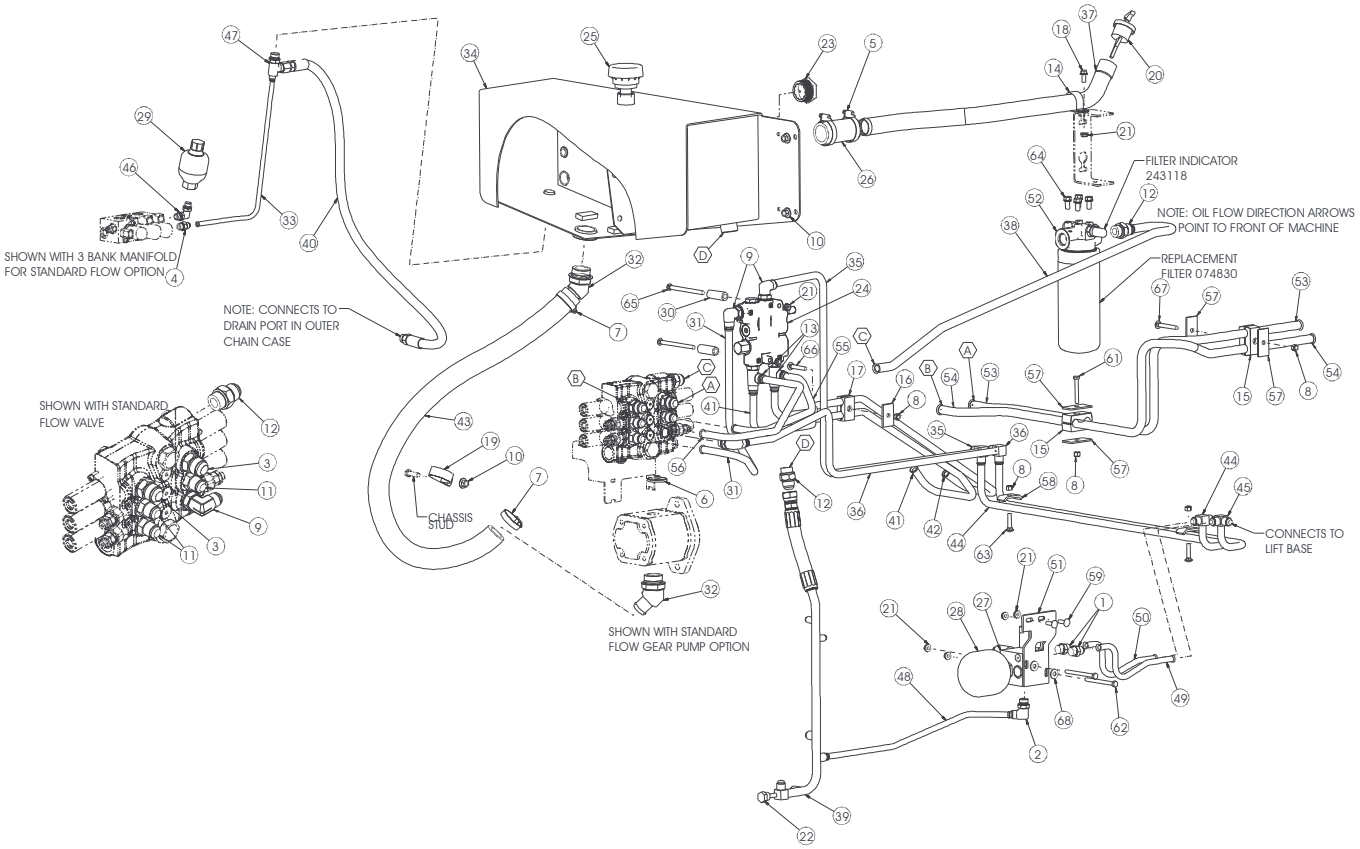

410589

Ref. No.	Part No.	Description	Quantity
1	054626	FITTING/STRAIGHT MJ08-MORB08	2
2	054816	FITTING/90° SAE08 X JIC08	1
3	054819	FITTING/STRAIGHT MJ12 X MORB10	2
4	054994	FITTING/STRAIGHT MJ06 X MAORB06	1
5	055030	CLAMP/HOSE #28	2
6	055648	TIE/CABLE 3/16 X 7-1/2	1
7	193743	CLAMP/T-BOLT 1-3/4	2
8	064260	NUT/HEX LOCK 5/16	5
9	067761	FITTING/90° MJ10 X MAORB10	3
10	070856	NUT/LOCK SERRATED FLANGE 3/8	5
11	072580	FITTING/STRAIGHT MJ10-MORB10	3
12	072587	FITTING/STRAIGHT SAE12 X JIC12	3
13	072807	FITTING/TEE RUN MJ10 X MAORB10 X MJ10	2
14	075196	CLAMP/HOSE	1
15	079097	CLAMP/TUBE 3/4 TWIN	2
16	079098	PLATE/TWIN COVER	1
17	079126	CLAMP/TUBE 5/8	1
18	081380	SCREW/CAP LOCKING 5/16 X 3/4	1
19	P470989	CLAMP/HOSE	1
20	127342	CAP/HYDRAULIC RESERVOIR	1
21	131842	NUT/SPIRALOCK™ 5/16	7
22	132049	TEMPERATURE SWITCH	1
23	134756	SIGHT PORT/OIL LEVEL	1
24	135367 a	VALVE/SELF-LEVEL	1
25	138877	FILTER/VENTILATION	1
26	170-34119	HOSE/1-1/2 X 4	1
27	184363 a	MANIFOLD/HYDRAGLIDE	1
28	184415	ACCUMULATOR	1
29	188985	ACCUMULATOR	1
30	191763	SPACER 3/4 X 13/32	2
31	193486	TUBE/LIFT	1
32	193665	FITTING/45° SAE20 X HB20	2
33	50351121	TUBE/CASE DRAIN	1
34	240670	TANK//HYDRAULIC	1
35	240732	TUBE/LIFT	1
36	240741	TUBE/LIFT	1
37	241110	TUBE/FILL NECK	1
38	241304	TUBE/FILTER	1
39	241349	DRAIN/DRIVE MOTOR	1
40	241540	HOSE/MEDIUM PRESSURE 1/2 X 45	1
41	241653	TUBE/TILT	1
42	241655	TUBE/TILT	1
43	241784	HOSE/SUCTION	1
44	242176	TUBE/LIFT	1
45	242182	TUBE/LIFT	1
46	242521	FITTING/90° MB06 X MJ06 ADJUSTABLE	1
47	242681	FITTING/TEE JIC06 X SAE08 X JIC08	1
48	242691	TUBE/DRAIN/RIDE CONTROL	1
49	242693	TUBE/RIDE CONTROL/LEFT	1
50	242694	TUBE/RIDE CONTROL/RIGHT	1
51	242702	BRACKET/MTG/VALVE	1
52	243117	ASSEMBLY/HYDRAULIC FILTER (074830 FILTER/HYDRAULIC OIL, 243118 INDICATOR/FILTER)	1
53	244581	TUBE/AUXILIARY FLOW	1
54	244582	TUBE/AUXILIARY FLOW	1
55	244589	TUBE/TILT	1
56	50353897	TUBE/TILT SELF-LEVEL	1
57	245055	PLATE/TWIN FLAT	4
58	390-15909	CLIP/HYDRAULIC LINE	2
59	650573	BOLT/CARRIAGE 5/16 X 1	2
61	650725	SCREW/CAP 5/16 X 2-1/4	1
62	650732	SCREW/CAP 5/16 X 3-3/4	2
63	650781	BOLT/CARRIAGE 5/16 X 1-1/2	2
64	651041	SCREW/MACHINE HEX WASHER HEAD 3/8 X 3/4	4
65	651688	BOLT/CARRIAGE 5/16 X 4-1/2	2
66	652036	BOLT/CARRIAGE 5/16 X 2	1
67	652040	BOLT/CARRIAGE 5/16 X 2-1/2	1
68	654004	WASHER/FLAT 5/16	2

a) For breakdown see “Section B” of this manual.

V270 Models: SN 021600 and Before

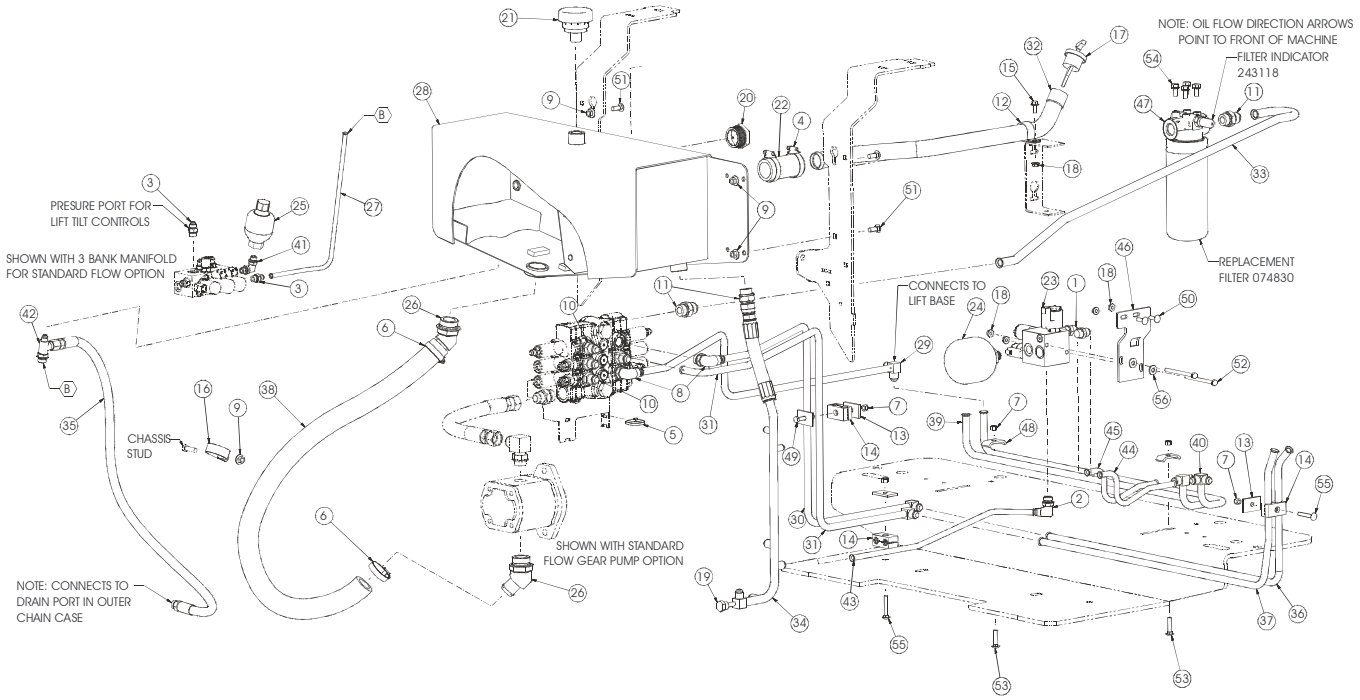

410521

Ref. No.	Part No.	Description	Quantity
1	054626	FITTING/STRAIGHT MJ08-MORB08	2
2	054816	FITTING/90° SAE08 X JIC08	1
3	054994	FITTING/STRAIGHT MJ06 X MAORB06	2
4	055030	CLAMP/HOSE #28	2
5	055648	TIE/CABLE 3/16 X 7-1/2	1
6	061946	CLAMP/HOSE #24 SAE	2
7	064260	NUT/HEX LOCK 5/16	5
8	067761	FITTING/90° MJ10 X MAORB10	2
9	070856	NUT/LOCK SERRATED FLANGE 3/8	5
10	072580	FITTING/STRAIGHT MJ10-MORB10	4
11	072587	FITTING/STRAIGHT SAE12 X JIC12	3
12	075196	CLAMP/HOSE	1
13	079098	PLATE/TWIN COVER	4
14	079126	CLAMP/TUBE 5/8	3
15	081380	SCREW/CAP LOCKING 5/16 X 3/4	1
16	089001	CLAMP/HOSE	1
17	127342	CAP/HYDRAULIC RESERVOIR	1
18	131842	NUT/SPIRALOCK™ 5/16	5
19	132049	TEMPERATURE SWITCH	1
20	134756	SIGHT PORT/OIL LEVEL	1
21	138877	FILTER/VENTILATION	1
22	170-34119	HOSE/1-1/2 X 4	1
23	184363 a	MANIFOLD/HYDRAGLIDE	1
24	184415	ACCUMULATOR	1
25	188985	ACCUMULATOR	1
26	193665	FITTING/45° SAE20 X HB20	2
27	240421	TUBE/CASE DRAIN	1
28	240670	TANK//HYDRAULIC	1
29	240741	TUBE/LIFT	1
30	240742	TUBE/AUXILIARY	1
31	240744	TUBE/AUXILIARY	1
32	241110	TUBE/FILL NECK	1
33	241304	TUBE/FILTER	1
34	241349	DRAIN/DRIVE MOTOR	1
35	241540	HOSE/MEDIUM PRESSURE 1/2 X 45	1
36	241706	TUBE/AUXILIARY	1
37	241713	TUBE/AUXILIARY	1
38	241784	HOSE/SUCTION	1
39	242176	TUBE/LIFT	1
40	242182	TUBE/LIFT	1
41	242521	FITTING/90° MB06 X MJ06 ADJUSTABLE	1
42	242681	FITTING/TEE JIC06 X SAE08 X JIC08	1
43	242691	TUBE/DRAIN/RIDE CONTROL	1
44	242693	TUBE/RIDE CONTROL/LEFT	1
45	242694	TUBE/RIDE CONTROL/RIGHT	1
46	242702	BRACKET/MTG/VALVE	1
47	243117	ASSEMBLY/HYDRAULIC FILTER (074830 FILTER/HYDRAULIC OIL, 243118 INDICATOR/FILTER)	1
48	390-15909	CLIP/HYDRAULIC LINE	2
49	650568	SCREW/CAP 5/16 X 2	1
50	650573	BOLT/CARRIAGE 5/16 X 1	2
51	650704	BOLT/CARRIAGE 3/8 X 1	4
52	650732	SCREW/CAP 5/16 X 3-3/4	2
53	650781	BOLT/CARRIAGE 5/16 X 1-1/2	2
54	651041	SCREW/MACHINE HEX WASHER HEAD 3/8 X 3/4	4
55	652036	BOLT/CARRIAGE 5/16 X 2	2
56	654004	WASHER/FLAT 5/16	2

a) For breakdown see “Section B” of this manual.

Standard (Non-Self-Leveling) Hydraulics
V270 Models: SN 021600 and Before

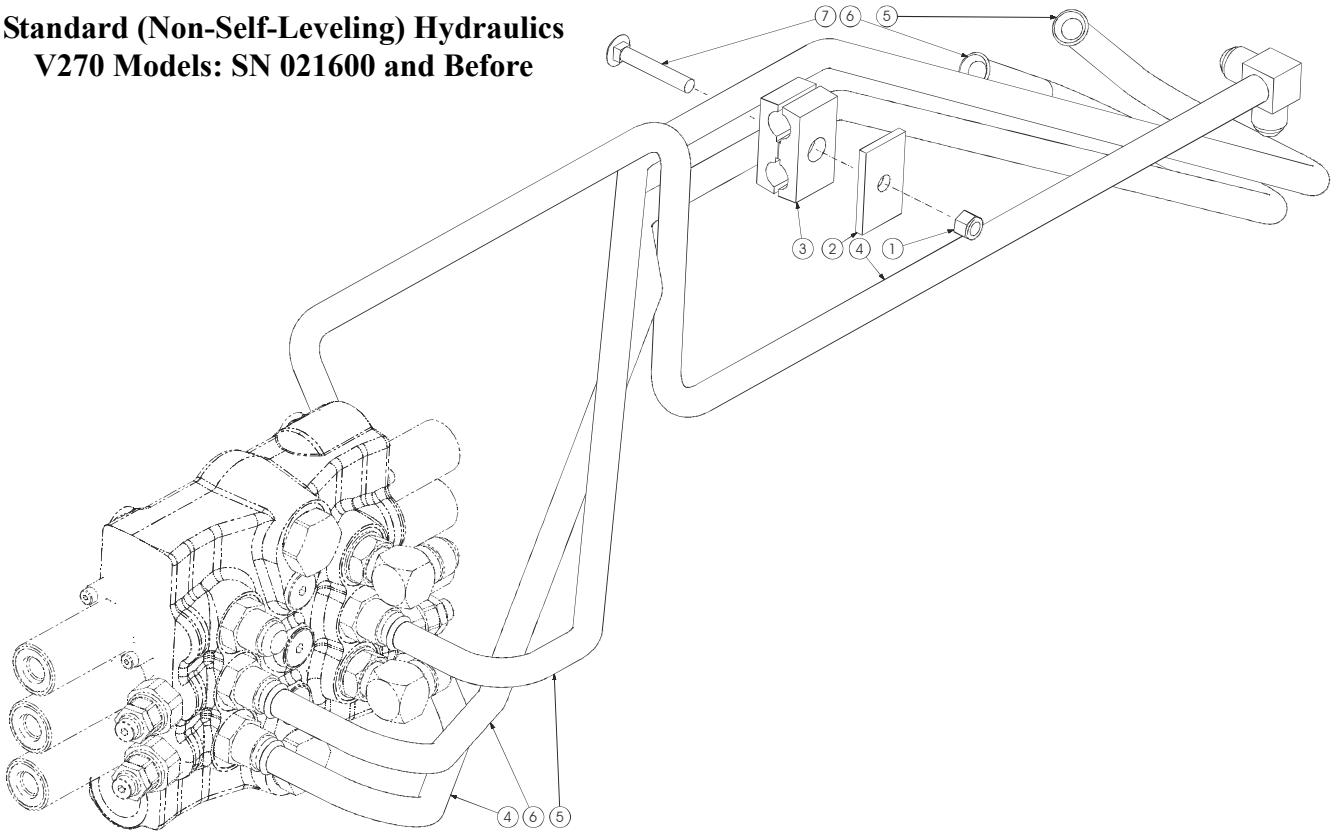

Self-Leveling Valve Hydraulics
V270 Models: SN 021600 and Before

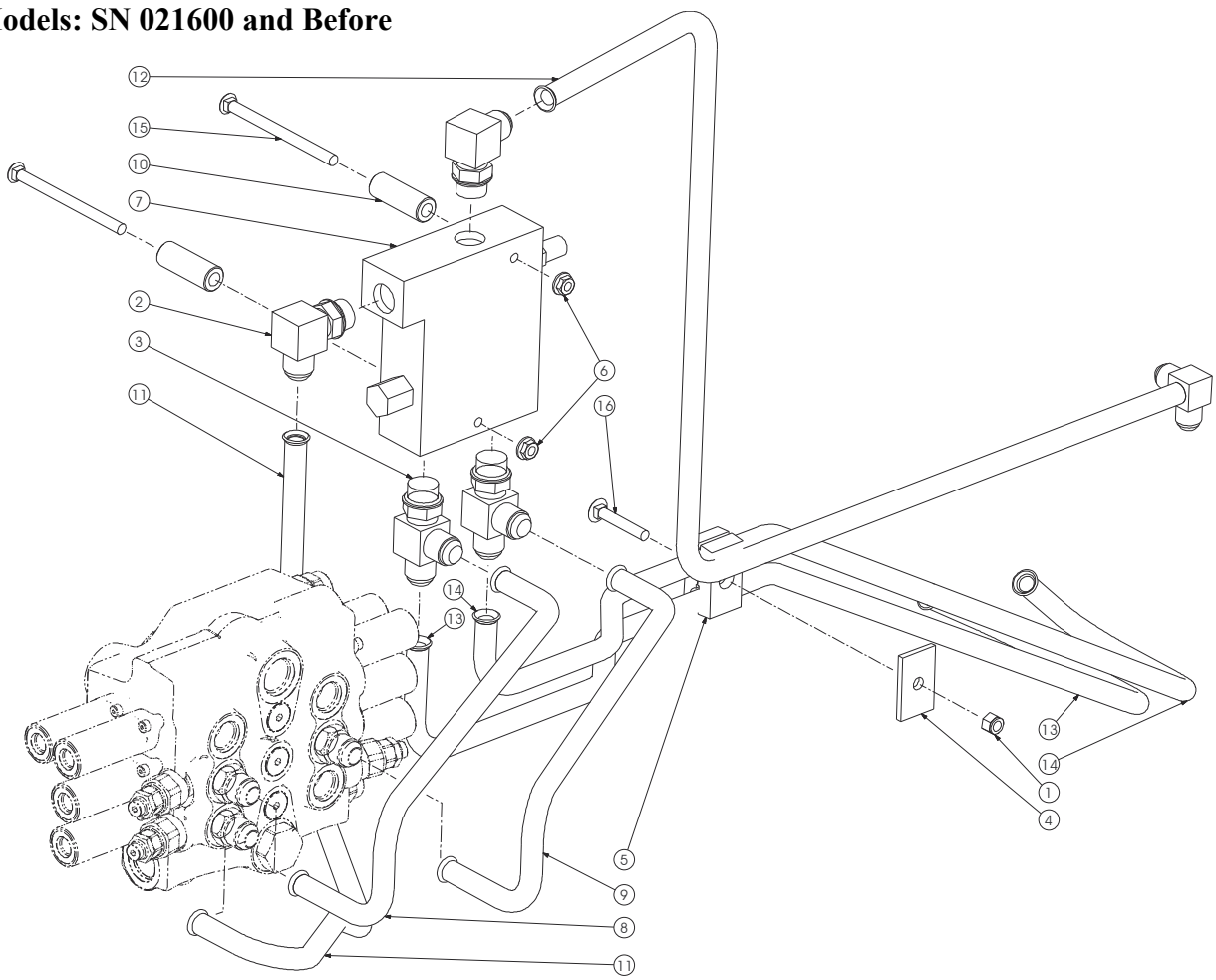

410522_410523

Ref. No.	Part No.	Description	Quantity Non-Self-Level
1	064260	NUT/HEX LOCK 5/16	1
2	079098	PLATE/TWIN COVER	1
3	079126	CLAMP/TUBE 5/8	1
4	242463	TUBE/LIFT/NO SELF-LEVEL	1
5	242523	TUBE/TILT/NO SELF-LEVEL	1
6	242524	TUBE/TILT/NO SELF-LEVEL	1
7	652036	BOLT/CARRIAGE 5/16 X 2	1

Ref. No.	Part No.	Description	Quantity Self-Level
1	064260	NUT/HEX LOCK 5/16	1
2	067761	FITTING/90° SAE10 X JIC10	2
3	072807	FITTING/TEE JIC10 X SAE10 X JIC10	2
4	079098	PLATE/TWIN COVER	1
5	079126	CLAMP/TUBE 5/8	1
6	131842	NUT/SPIRALOCK™ 5/16	2
7	135367 a	VALVE/SELF LEVEL	1
8	191549	TUBE/TILT	1
9	191553	TUBE/TILT	1
10	191763	SPACER 3/4 OD X .406 ID	2
11	193486	TUBE/LIFT	1
12	240732	TUBE/LIFT	1
13	241653	TUBE/TILT	1
14	241655	TUBE/TILT	1
15	651688	BOLT/CARRIAGE 5/16 X 4-1/2	2
16	652036	BOLT/CARRIAGE 5/16 X 2	1

a) For breakdown see “Section B” of this manual.

Standard Auxiliary Hydraulics

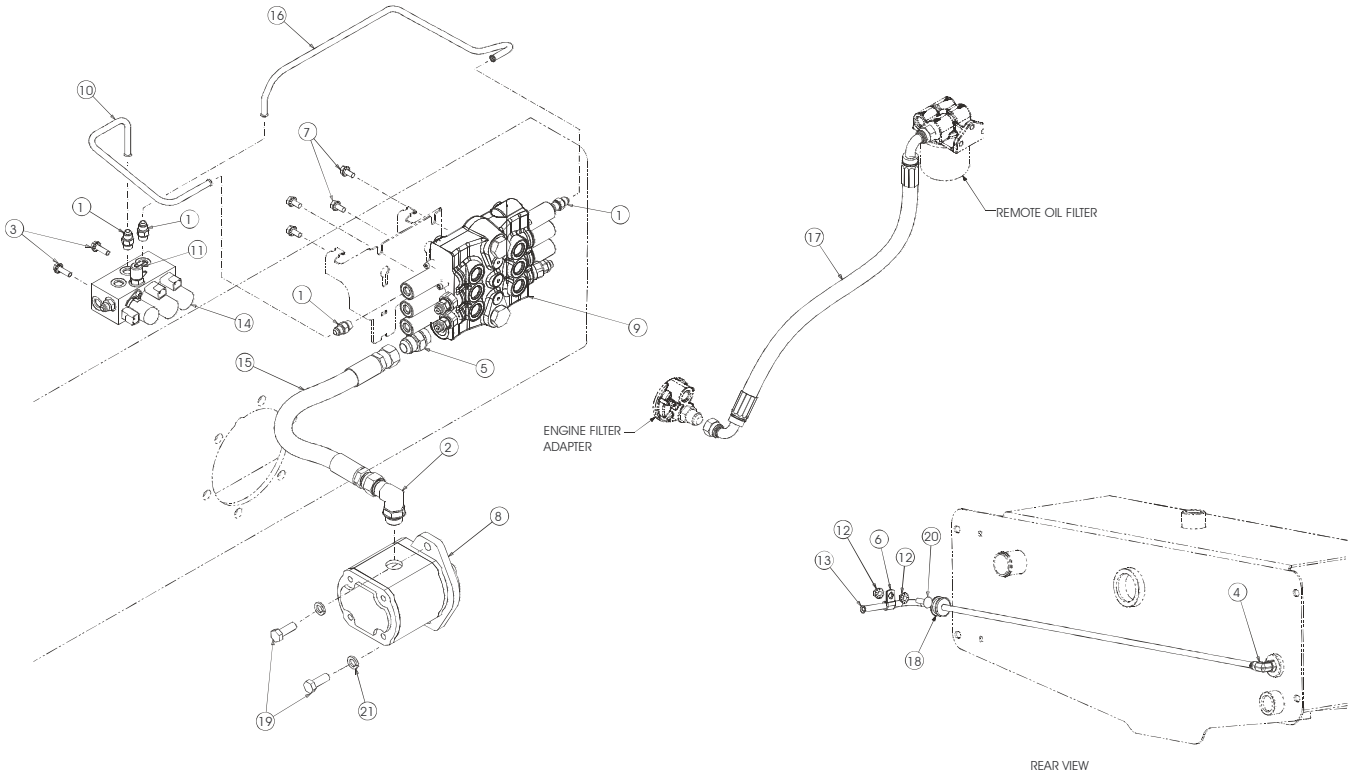

NOTES:
1. CONTROL VALVE RELIEF 3300 ±25 PSI FULL THROTTLE FOR V270/2700V
2. CONTROL VALVE RELIEF 3450 ±25 PSI FULL THROTTLE FOR V330/3300V

410307

Ref. No.	Part No.	Description	Quantity Standard
1	054994	FITTING/STRAIGHT MJ06 X MORB06	4
2	055005	FITTING/90° MJ12 X MAORB12	1
3	064354	SCREW/CAP SERRATED LOCK 5/16 X 1	2
4	068938	FITTING/90º MJ06 X MAORB06	1
5	072587	FITTING/STRAIGHT MJ12 X MORB12	1
6	076078	CLAMP/HOSE 3/8 X 3/4 HOLE	1
7	076587	SCREW/CAP LOCKING 5/16 X 5/8	4
8	135930 a	PUMP/GEAR 2.01	1
	132248	O-RING 045 N70	1
9	193103 a	VALVE/3 SPOOL/PILOT CONTROL	1
10	193526	TUBE/AUXILIARY FEED	1
11	193562	PORT/TEST 9/16	1
12	210-19470	NUT/LOCK FLANGE SERRATED 5/16	2
13	241422	DRAIN/CASE HIGH-FLOW	1
14	244511 a	3 BANK/MANIFOLD VALVE	1
15	245105	HOSE/HIGH PRESSURE 3/4 X 19	1
16	245107	TUBE/AUXILIARY RETURN	1
17	50352302	HOSE 5/8 X 30	1
18	50352741	GROMMET 3/8 ID 3/8 GW 1.00	1
19	50657014	SCREW/CAP 1/2 X 1-3/8	2
20	651065	BOLT/CARRIAGE ROUND HEAD SOCKET SQUARE NECK 5/16 X 1	1
21	654030	WASHER/LOCK 1/2	2

a) For breakdown see “Section B” of this manual.

High-Flow Auxiliary Hydraulics
V330 Models
V270 Models: SN 021601 and Up

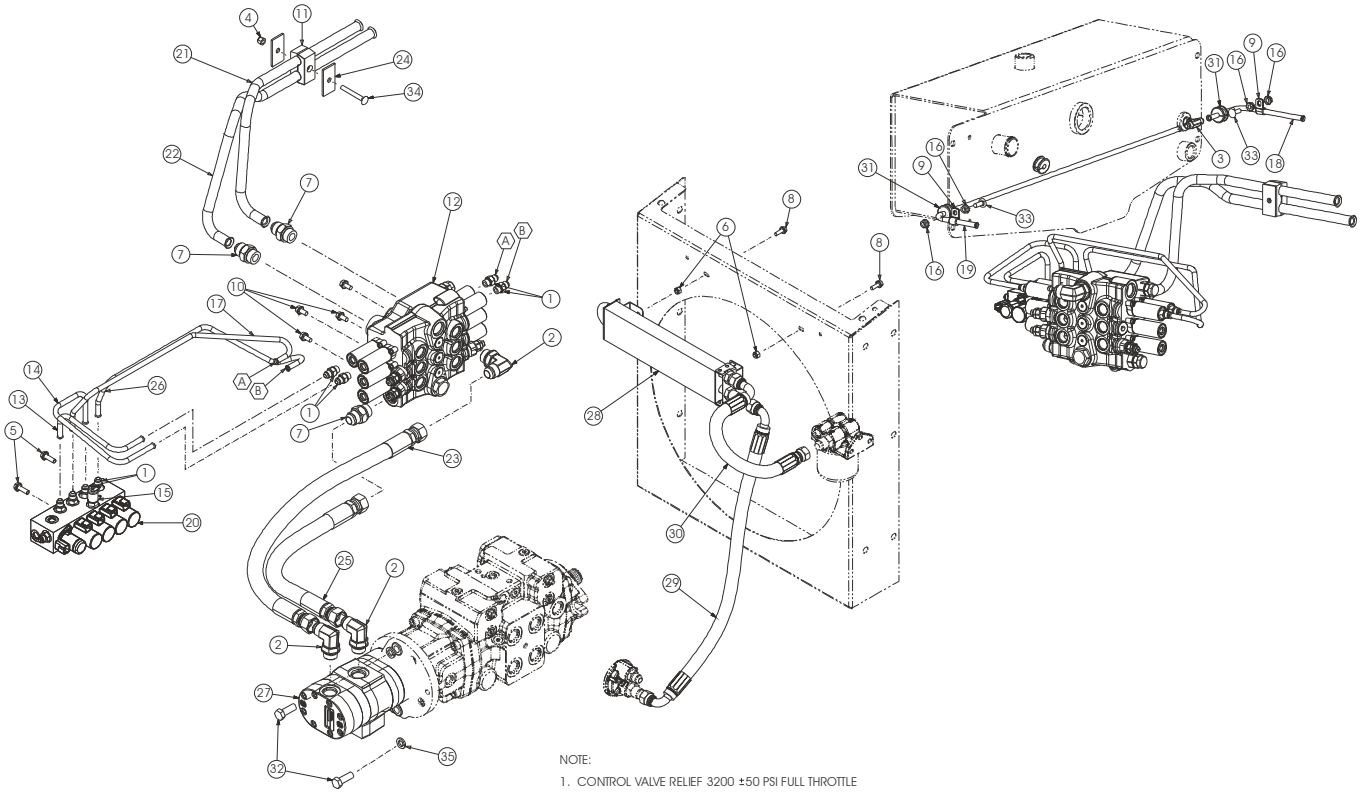

410610

Ref. No.	Part No.	Description	Quantity V330/V270 HF
1	054994	FITTING/STRAIGHT MJO6 X MORB06	8
2	055005	FITTING/90° SAE12 X JIC12	3
3	055981	FITTING/TEE JIC06 X SAE06 X JIC06	1
4	064260	NUT/HEX LOCK 5/16	1
5	064354	SCREW/CAP SERRATED LOCK 5/16 X 1	2
6	071401	NUT/HEX INST LOCK 1/4	2
7	072587	FITTING/STRAIGHT SAE12 X JIC12	3
8	072916	SCREW/CAP 1/4 X 3/4	2
9	076078	CLAMP/TUBE 3/8	2
10	076587	SCREW/CAP LOCKING 5/16 X 5/8	4
11	079097	CLAMP/TUBE 3/4	1
12	193104 a	VALVE/4 SPOOL/PILOT CONT	1
13	193524	TUBE/HIGH FLOW FEED	1
14	193526	TUBE/AUXILIARY FEED	1
15	193562	PORT/TEST 9/16	1
16	210-19470	NUT/LOCK FLANGE SERRATED 5/16	4
17	240830	TUBE/HIGH-FLOW RETURN	1
18	241165	AUXILIARY/CASE DRAIN	1
19	241422	DRAIN/CASE HIGH-FLOW	1
20	244513 a	5 BANK/MANIFOLD VALVE	1
21	244873	TUBE/HIGH-FLOW	1
22	244878	TUBE/HIGH-FLOW	1
23	245054	HOSE/MEDIUM PRESSURE 3/4 X 27	1
24	245055	PLATE/TWIN FLAT	2
25	245105	HOSE/MEDIUM PRESSURE 3/4 X 19	1
26	245107	TUBE/AUXILIARY RETURN	1
27	274666 a	PUMP/GEAR DOUBLE 1.94/1.37	1
28	50350374 b	ASSEMBLY/COOLER	1
	243192	COOLER/OIL	1
29	50352307	HOSE 5/8 X 25	1
30	50352308	HOSE 5/8 X 18	1
31	50352741	GROMMET 3/8 ID 3/8 GW 1.00	2
32	50657014	SCREW/CAP 1/2 X 1-3/8	2
33	651065	BOLT/CARRIAGE ROUND HEAD SOCKET SQUARE NECK 5/16 X 1	2
34	652040	BOLT/CARRIAGE 5/16 X 2-1/2	1
35	654030	WASHER/LOCK 1/2	2

a) For breakdown see “Section B” of this manual.
b) Cooler Assembly 50350374 consists of the 243192 COOLER/OIL (1), 071401 NUT/HEX LOCK 1/4 (4), 072916 SCREW/CAP LOCKING 1/4 X 3/4 (4) and the 243214 BRACKET/OIL COOLER (2).

High-Flow Auxiliary Hydraulics
V270 Models: SN 021600 and Before

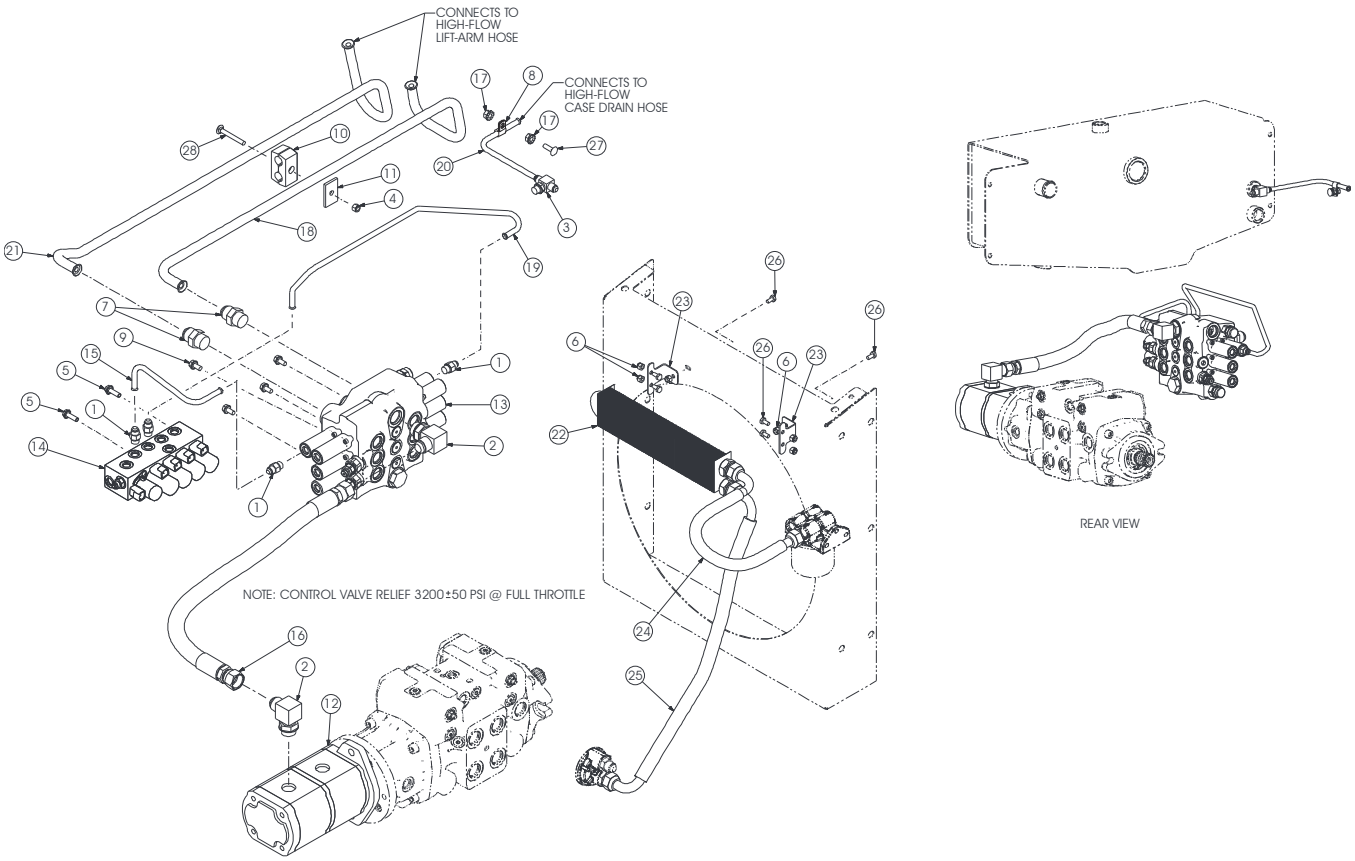

410289

Ref. No.	Part No.	Description	Quantity V270 HF
1	054994	FITTING/STRAIGHT MJO6 X MORB06	4
2	055005	FITTING/90° SAE12 X JIC12	2
3	055981	FITTING/TEE JIC06 X SAE06 X JIC06	1
4	064260	NUT/HEX LOCK 5/16	1
5	064354	SCREW/CAP SERRATED LOCK 5/16 X 1	2
6	071401	NUT/HEX INST LOCK 1/4	6
7	072587	FITTING/STRAIGHT SAE12 X JIC12	2
8	076078	CLAMP/TUBE 3/8	1
9	076587	SCREW/CAP LOCKING 5/16 X 5/8	4
10	079097	CLAMP/TUBE 3/4	1
11	079098	PLATE/TWIN COVER	1
12	190597 a	PUMP/HYDRAULIC GEAR 2.0 X 1.4 (TAKES 132248 O-RING)	1
13	193104 a	VALVE/4 SPOOL/PILOT CONT	1
14	244513 a	5 BANK/MANIFOLD VALVE	1
15	193524	TUBE/HIGH FLOW FEED	1
16	194510	HOSE/MEDIUM PRESSURE 3/4 X 26	1
17	210-19470	NUT/LOCK FLANGE SERRATED 5/16	2
18	240719	TUBE/HIGH FLOW	1
19	240830	TUBE/HIGH FLOW RETURN	1
20	241165	AUXILIARY/CASE DRAIN	1
21	241877	TUBE/HIGH FLOW	1
22	243192	COOLER/OIL	1
23	243214	BRACKET/OIL COOLER	2
24	50352308	HOSE 5/8 X 18	1
25	50352307	HOSE 5/8 X 25	1
26	072916	SCREW/CAP 1/4 X 3/4	6
27	651065	BOLT/CARRIAGE ROUND HEAD SOCKET SQUARE NECK 5/16 X 1	1
28	652040	BOLT/CARRIAGE 5/16 X 2-1/2	1

a) For breakdown see “Section B” of this manual.

Standard Hydraulics

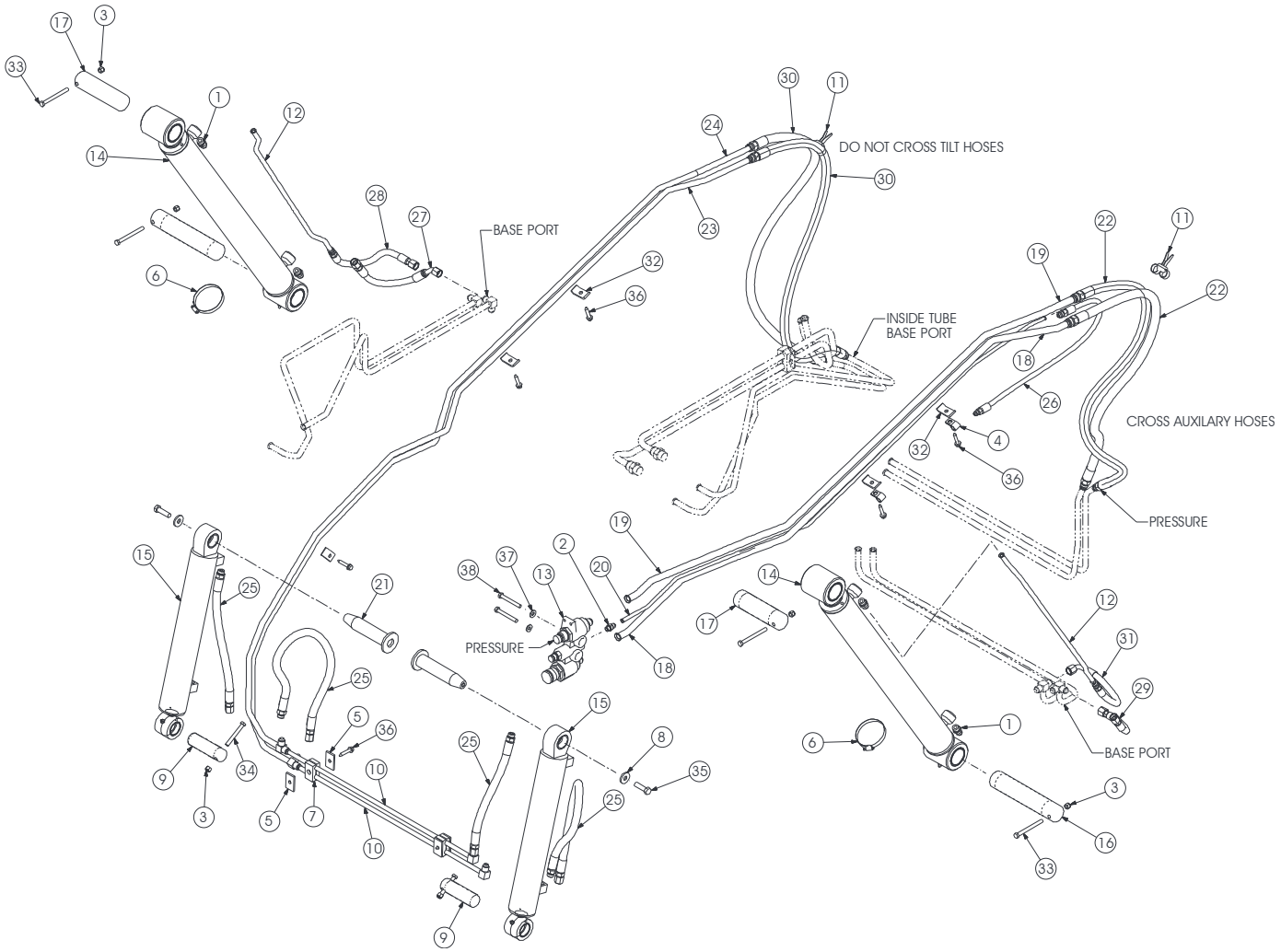

410151_410607

Ref. No.	Part No.	Description	Quantity
1	054626	FITTING/STRAIGHT MJ08-MORB08	4
2	054994	FITTING/STRAIGHT MJ06 X MAORB06	1
3	067847	NUT/HEX LOCK 3/8	6
4	076147	CLAMP/HOSE 1/2 X 13/32 HOLE	2
5	079098	PLATE/TWIN COVER	4
6	087849	CLAMP/HOSE #52	2
7	088904	CLAMP/TUBE 1/2	2
8	134966	WASHER/FLAT HARDENED 1/2	2
9	135300	PIN	2
10	137186	TUBE/CROSSMEMBER REAR	2
11	137859	TIE/DUAL CLAMP	2
12	170-35039	HYDRAULIC LINE/LIFT CYLINDER	2
13	50352739	BLOCK/COUPLER	1
	50352909	KIT/SERVICE MALE QUICK-COUPLER	1
	50352910	KIT/SERVICE FEMALE QUICK-COUPLER	1
	50352912	KIT/SERVICE RETURN QUICK-COUPLER	1
	50352914	KIT/SERVICE 3/4 SAE FITTING	1
14	192266 a	CYLINDER/LIFT 3 X 28-1/8	2
15	193299 a	CYLINDER/TILT 3 X 15-1/8	2
16	240416	PIN/PIVOT 2 X 10-1/8	2
17	240419	PIN/PIVOT 2 X 7-1/8	2
18	240912	TUBE/AUXILIARY LOWER	1
19	240914	TUBE/AUXILIARY UPPER	1
20	241067	TUBE/DRAIN AUXILIARY	1
21	241334	PIN/WELDMENT 1-1/2 X 6-7/8	2
22	244652 c	HOSE/MEDIUM PRESSURE 5/8 X 43	2
	241382 b	HOSE/MEDIUM PRESSURE 5/8 X 56	2
23	241431	TUBE/TILT	1
24	241432	TUBE/TILT	1
25	241558	HOSE/MEDIUM PRESSURE 3/8 X 20-1/2	4
26	241788	HOSE/MEDIUM PRESSURE 3/8 X 40	1
27	241806	HOSE/MEDIUM PRESSURE 3/8 X 14	1
28	241807	HOSE/MEDIUM PRESSURE3/8 X 14	1
29	242333	HOSE/MEDIUM PRESSURE 3/8 X 10	1
30	242610	HOSE/MEDIUM PRESSURE.63 X 59-3/4	2
31	243016	HOSE/MEDIUM PRESSURE 3/8 X 16-1/2	1
32	390-15909	CLIP/HYDRAULIC LINE	5
33	650742	SCREW/CAP 3/8 X 4	4
34	650818	SCREW/CAP 3/8 X 3	2
35	651366	SCREW/CAP 1/2 X 1-3/4	2
36	50351222 c	SCREW/TAPPING HEX WASHER HEAD THREAD FORMING 5/16 X 1-3/4	5
	244572 c	SCREW/TAPPING HEX WASHER HEAD THREAD ROLL 5/16 X 2-1/4 (AT REF #10)	2
	651771 b	SCREW/TAPPING HEX WASHER HEAD THREAD ROLL 5/16 X 1-3/4	7
37	654004	WASHER/FLAT 3/8	2
38	650629	SCREW/CAP 3/8 X 3-1/4	2

a) For breakdown see “Section B” of this manual.
b) V270 Models: SN 021600 and Before
c) V270 Models: SN 021601 and Up. All V330 Models.

High-Flow Hydraulics

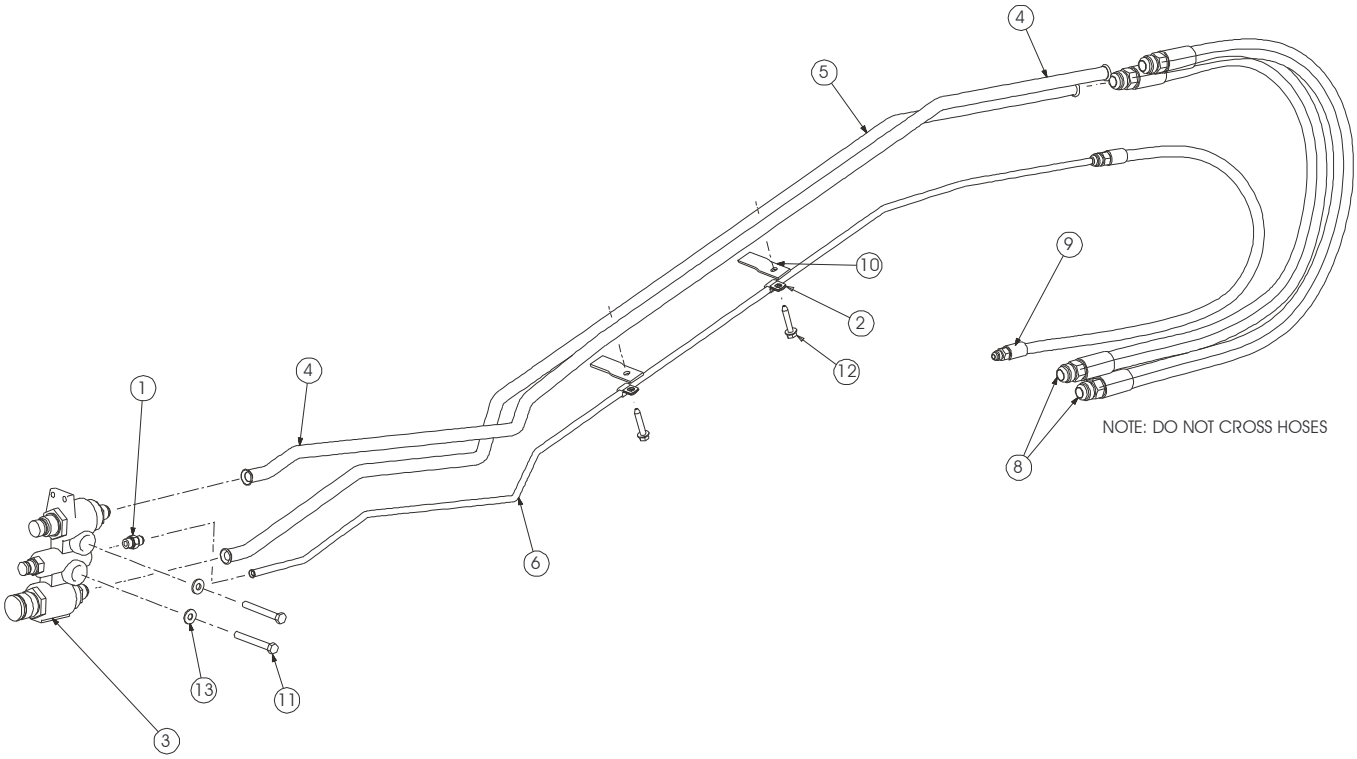

410558

Ref. No.	Part No.	Description	High-Flow Quantity
1	054994	FITTING/STRAIGHT MJ06 X MAORB06	1
2	076078	CLAMP/HOSE 3/8 X 11/32 HOLE	2
3	50352739	BLOCK/COUPLER	1
	50352909	KIT/SERVICE MALE QUICK-COUPLER	1
	50352910	KIT/SERVICE FEMALE QUICK-COUPLER	1
	50352912	KIT/SERVICE RETURN QUICK-COUPLER	1
	50352914	KIT/SERVICE 3/4 SAE FITTING	1
4	240918	TUBE/HIGH FLOW UPPER	1
5	240922	TUBE/HIGH FLOW LOWER	1
6	241069	TUBE/DRAIN HIGH FLOW	1
8	241785	HOSE/MEDIUM PRESSURE 3/4 X 47	2
9	241788	HOSE/MEDIUM PRESSURE 3/8 X 40	1
10	242577	PLATE/TUBE	2
11	650629	SCREW/CAP 3/8 X 3-1/4	2
12	50351222	SCREW/TAPPING HEX WASHER HEAD THREAD FORMING 5/16 X 1-3/4	2
13	654004	WASHER/FLAT 3/8	2

Dual Joystick Controls

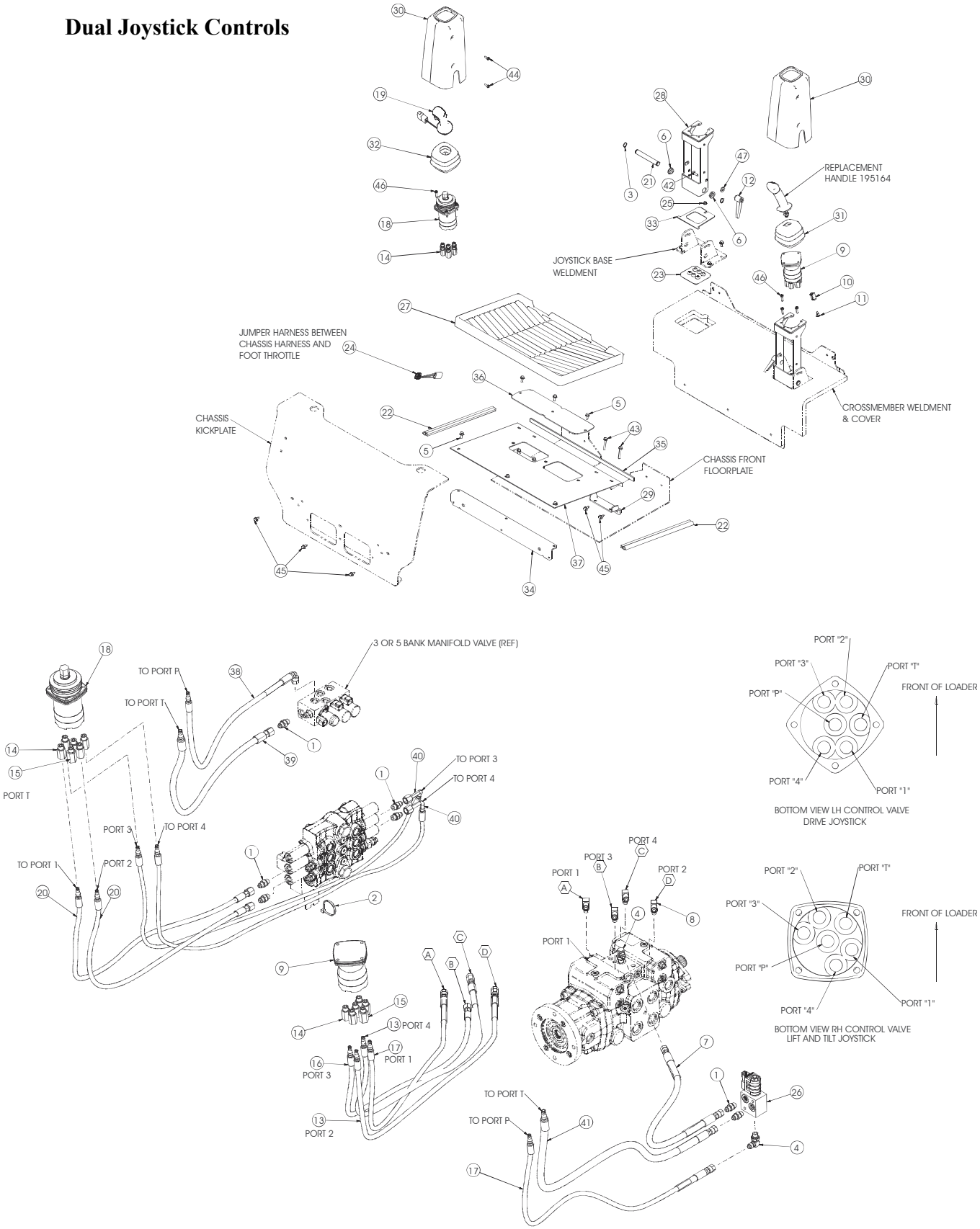

410388

Ref. No.	Part No.	Description	Quantity DJS
1	054994	FITTING/STRAIGHT MJ06 X MAORB06	7
2	055648	TIE/CABLE 3/16 X 7-1/2	1
3	067950	RING/EXTERNAL RETAINING	4
4	194732	FITTING/90º LL MJ06 X MAORB06	2
5	081380	SCREW/CAP FLANGE LOCK 5/16 X 3/4	6
6	128316	BEARING	4
7	137606	HOSE/MEDIUM PRESSURE 3/8 X 23-1/2	1
8	137784	FITTING/90° SAE04 X JIC06	4
9	183902	JOYSTICK/DRIVE/KAWASAKI	1
10	184210	PLUG/4-PIN	1
11	184211	WEDGE/4-PIN	1
12	188430	HANDLE/RATCHET	2
13	189364	HOSE AND ADAPTER/LOW PRESSURE 1/4 X 49 (INCL. ITEM #14)	2
14	189192	ADAPTER/QD/HD/6MB-4QD	10
15	189193	ADAPTER/QD/HD/6MB-6QD	2
16	189358	HOSE AND ADAPTER/LOW PRESSURE 1/4 X 42 (INCL. ITEM #14)	1
17	189351	HOSE AND ADAPTER/LOW PRESSURE 1/4 X 45 (INCL. ITEM #14)	2
18	190270	JOYSTICK/KAWASAKI	1
19	194451	GRIP/AUXILIARY/ELECTRICAL	1
20	195889	HOSE AND ADAPTER/LOW PRESSURE 1/4 X 39 (INCL. ITEM #14)	2
21	195443	PIN/TILT CONSOLE	2
22	195511	SEAL/BULB	2
23	195528	GROMMET/PILOT HOSES	2
24	195559	HARNESS/THROTTLE	1
25	210-19469	NUT/LOCK FLANGE SERRATED 1/4	2
26	50352381 a	VALVE/JOYSTICK SUPPLY	1
27	240901	MAT/FLOOR	1
28	241170	TOWER/JOYSTICK	2
29	241402	COVR/FLOORPLATE REAR	2
30	242029	COVER/TOWER	2
31	242520	BOOT/CONTROL VALVE SQ	1
32	242532	BOOT/CONTROL VALVE SQ	1
33	242616	BRACKET/GROMMET RETAINER	2
34	242621	BRACKET/MOUNTING FLOOR PLATE	1
35	242674	FOAM STRIP/FLOOR SEAL	1
36	242675	COVER/CLEAN-OUT	1
37	242678	PLATE/FLOOR	1
38	243240	HOSE AND ADAPTER/MEDIUM PRESSURE 1/4 X 34.00 (INCL. ITEM #14)	1
39	243239	HOSE AND ADAPTER/MEDIUM PRESSURE 3/8 X 34.00 (INCL. ITEM #15)	1
40	243238	HOSE AND ADAPTER/MEDIUM PRESSURE 1/4 X 62.00 (INCL. ITEM #14)	2
41	243237	HOSE AND ADAPTER/MEDIUM PRESSURE 3/8 X 43.00 (INCL. ITEM #15)	1
42	650573	BOLT/CARRIAGE 5/16 X 1	2
43	651169	SCREW/CAP LOCKING 5/16 X 2	4
44	651308	SCREW/MACHINE PAN HEAD CROSS RECESSED 1/4 X 3/4	4
45	650985	SCREW/TAPPING HEX WASHER HEAD THREAD CUTTING 5/16 X 3/4	7
46	651660	SCREW/TAPPING HEX WASHER HEAD THREAD ROLL 1/4 X 1-1/4	7
47	654004	WASHER/FLAT 5/16	2

a) For breakdown, see “Section B” of this manual.

Hand/Foot Controls

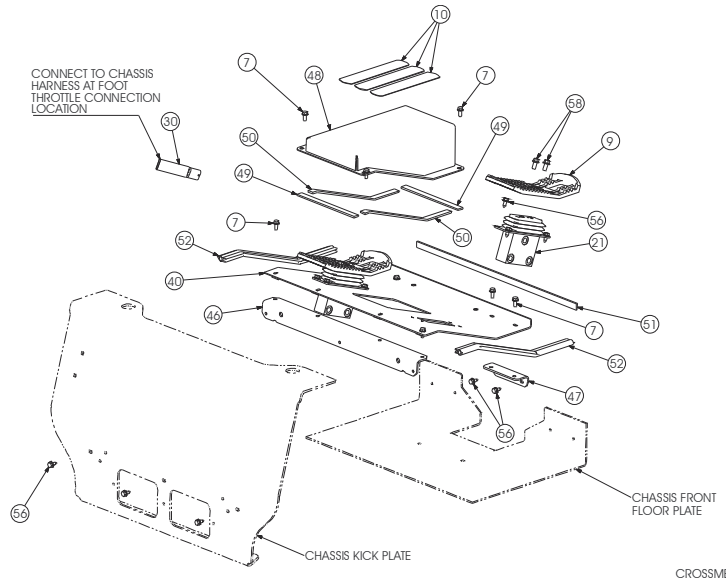

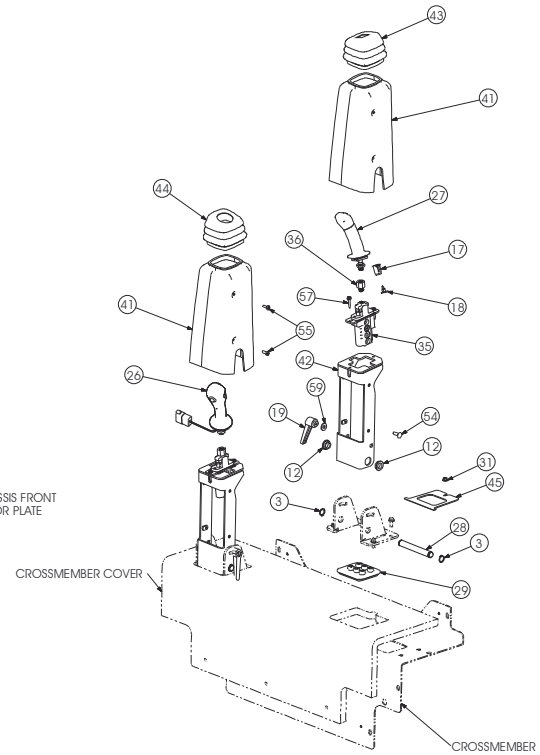

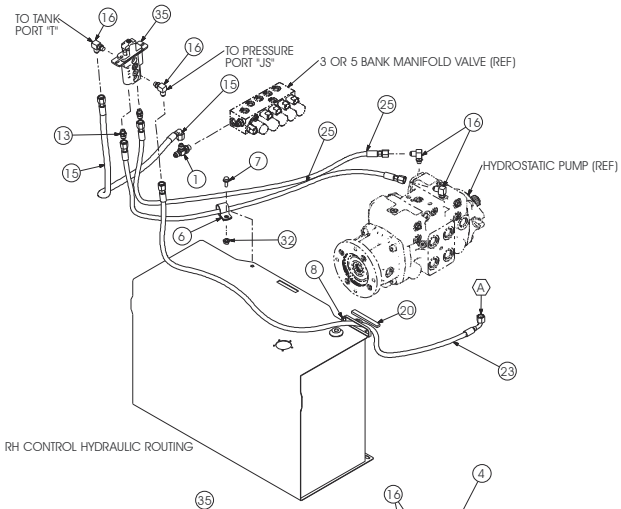

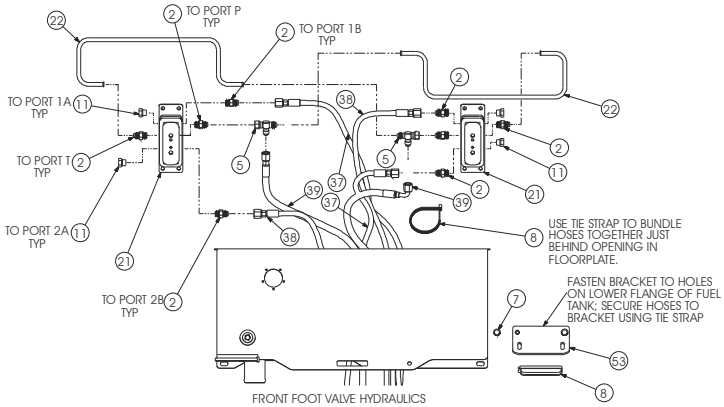

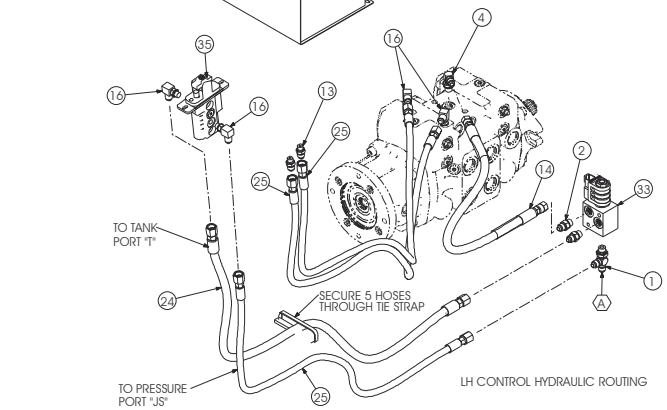

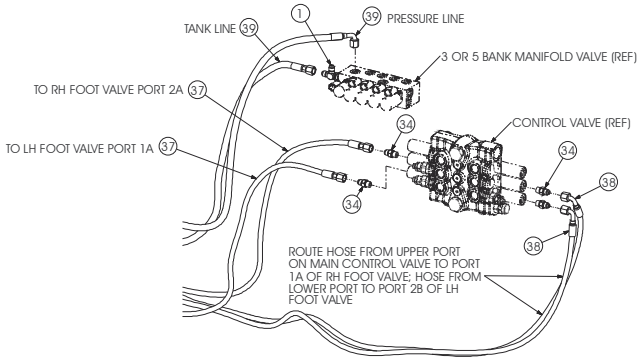

410403

Ref. No.	Part No.	Description	Quantity Hand/Foot
1	054820	FITTING/TEE MJ06 X MAORB06	2
2	054994	FITTING/STRAIGHT MJ06 X MAORB06	10
3	067950	RING/EXTERNAL RETAINING	4
4	194732	FITTING/90º LL MJ06 X MAORB06	1
5	072806	FITTING/TEE MJ06 X FJS06 X MJ06	2
6	073535	CLAMP/TUBE	1
7	081380	SCREW/CAP FLANGE LOCK 5/16 X 3/4	13
8	088467	TIE/NYLON 15-1/2	3
9	090-30303	PEDAL/FOOT	2
10	121030	STRIP/NON-SKID SURFACE	3
11	122778	PLUG 9/16	4
12	128316	BEARING/BRONZE	4
13	129124	FITTING/STRAIGHT SAE04 X JIC06	4
14	137606	HOSE/MEDIUM PRESSURE 3/8 X 23-1/2	1
15	137608	HOSE/MEDIUM PRESSURE 3/8 X 35	1
16	137784	FITTING/90° SAE04 X JIC06	8
17	184210	PLUG/4-PIN	1
18	184211	WEDGE/4-PIN	1
19	188430	HANDLE/RATCHET	2
20	191700	PAD	1
21	193335 a	VALVE/FOOT	2
22	193413	TUBE/PILOT HAND-FOOT	2
23	194071	HOSE/PRESSURE 1/4 X 58-1/2	1
24	194077	HOSE/PRESSURE 3/8 X 45	1
25	194097	HOSE/PRESSURE 1/4 X 45-1/2	5
26	194451	GRIP/AUXILIARY/ELECTRICAL	1
27	195164	KAWASAKI GRIP W/STUD	1
28	195443	PIN/TILT CONSOLE	2
29	195528	GROMMET/PILOT HOSES	2
30	195557	PLUG/HARNESS	1
31	210-19469	NUT/LOCK FLANGE SERRATED 1/4	2
32	210-19470	NUT/LOCK FLANGE SERRATED 5/16	1
33	50352381 a	VALVE/JOYSTICK SUPPLY	1
34	240172	VALVE/CHECK/ORFICE	4
35	240634	VALVE/CNTRL SINGLE AXIS	2
36	240745	ADAPTER	2
37	241389	HOSE/MEDIUM PRESSURE 1/4 X 59	2
38	241391	HOSE/MEDIUM PRESSURE 1/4 X 77	2
39	241392	HOSE/MEDIUM PRESSURE 3/8 X 59	2
40	241535	PLATE/FLOOR H-F	1
41	242029	COVER/TOWER	2
42	242490	TOWER/H-F	2
43	242520	BOOT/CONTROL VALVE SQ	1
44	242532	BOOT/CONTROL VALVE SQ	1
45	242616	BRACKET/GROMMET RETAINER	2
46	242622	MOUNTING/BRACKET H-F FLOOR	1
47	242643	BRACKET/REAR H-F FLOOR	2
48	242670	COVER/DOGHOUSE	1
49	242672	STRIP/FOAM DOGHOUSE SEAL	2
50	242673	STRIP/FOAM DOGHOUSE SEAL	2
51	242674	STRIP/FOAM FLOOR SEAL	1
52	195511	SEAL/BULB	2
53	242748	BRACKET/HOSE RETAINER	1
54	650573	BOLT/CARRIAGE 5/16 X 1	2
55	651308	SCREW/MACHINE PAN HEAD CROSS RECESSED 1/4 X 3/4	4
56	650985	SCREW/TAPPING HEX WASHER HEAD THREAD CUTTING 5/16 X 3/4	15
57	651660	SCREW/TAPPING HEX WASHER HEAD THREAD ROLL 1/4 X 1-1/4	4
58	651732	SCREW/CAP LOCKING M10 X 20 MM	4
59	654004	WASHER/FLAT 5/16	2

a) For breakdown see “Section B” of this manual.

Dual Joystick Controls

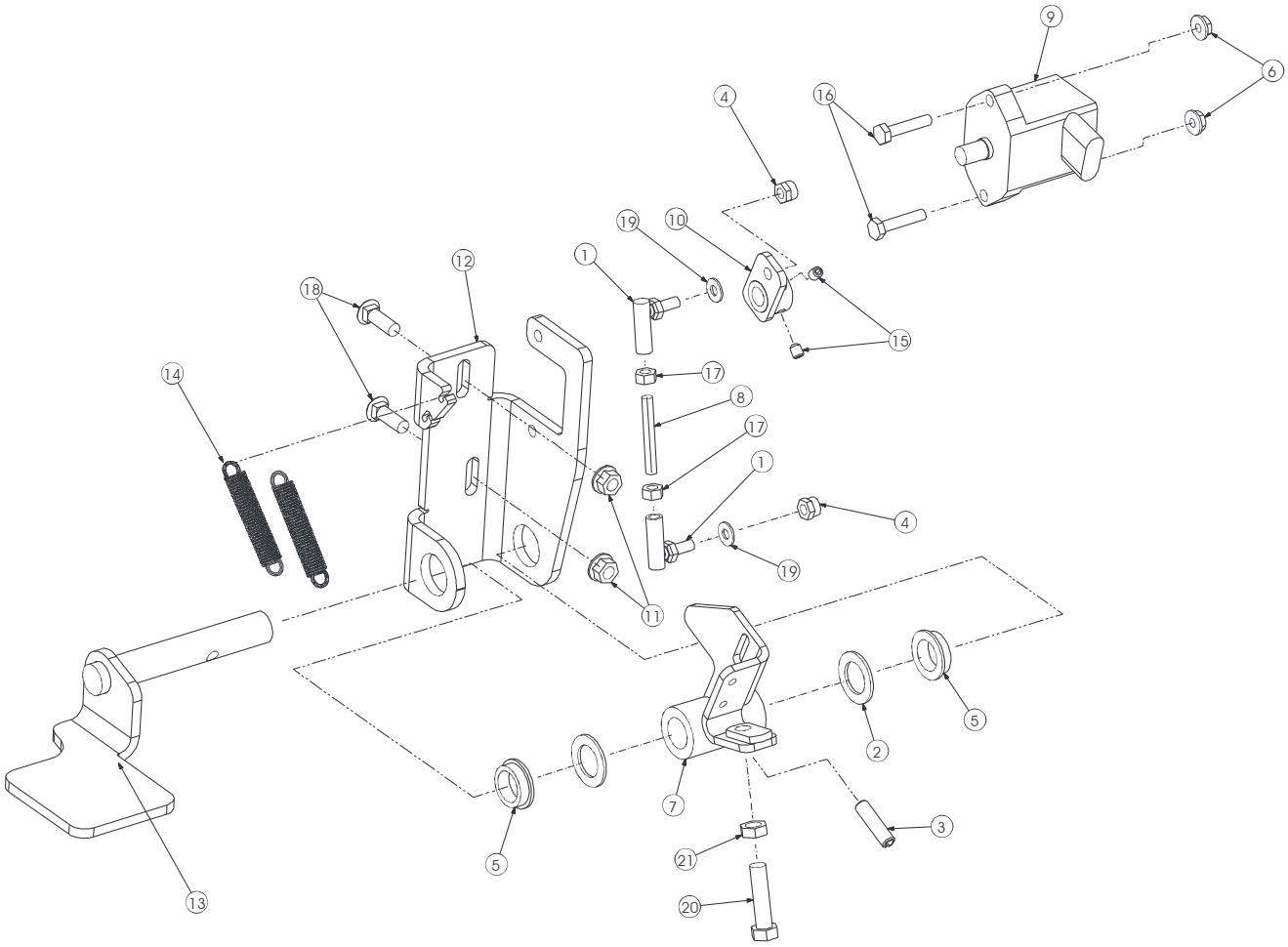

410195

Ref. No.	Part No.	Description	Quantity Dual Joystick
1	054885	JOINT/BALL	2
2	056937	WASHER/FLAT 25/32	2
3	075288	PIN/ROLL 5/16 X 1-1/4	1
4	121002	NUT/LOCK NYLON INSERT 1/4	2
5	128316	BEARING/BRONZE	2
6	134588	NUT/SPIRALOCK™ 1/4	2
7	194686	BRACKET/THROTTLE	1
8	195161	ROD/THREADED 1/4	1
9	195209	SENSOR/THROTTLE	1
10	195213	LINK/THROTTLE	1
11	210-19470	NUT/LOCK FLANGE SERRATED 5/16	2
12	50350203	BRACKET/THROTTLE	1
13	242044	PEDAL/THROTTLE	1
14	242492	SPRING	2
15	650196	SCREW/CAP SOCKET HEAD CUP POINT 1/4 X 5/16	2
16	650426	SCREW/CAP 1/4 X 1-1/4	2
17	650546	NUT/HEX 1/4	2
18	650745	BOLT/CARRIAGE 5/16 X 1-1/4	2
19	650580	WASHER/FLAT 3/16	2
20	651347	SCREW/CAP 3/8 X 1-1/2	1
21	653038	NUT/HEX JAM 3/8	1

V330 Models
V270 Models: SN 021601 and Up

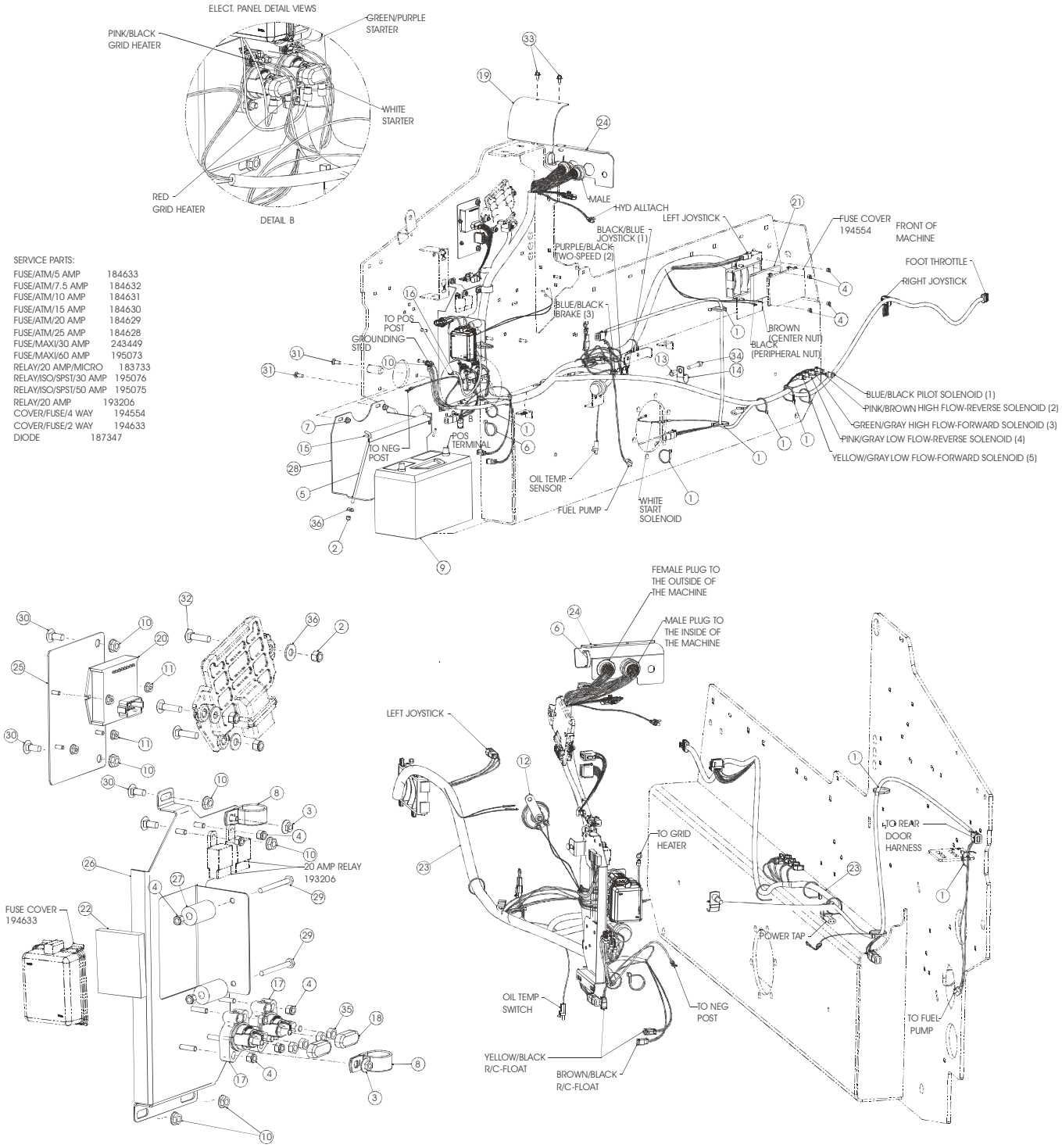

SERVICE PARTS:

FUSE/ATM/5 AMP	184633
FUSE/ATM/7.5 AMP	184632
FUSE/ATM/10 AMP	184631
FUSE/ATM/15 AMP	184630
FUSE/ATM/20 AMP	184629
FUSE/ATM/25 AMP	184628
FUSE/MAXI/30 AMP	243449
FUSE/MAXI/60 AMP	195073
RELAY/20 AMP/MICRO	183733
RELAY/ISO/SPST/30 AMP	195076
RELAY/ISO/SPST/50 AMP	195075
RELAY/20 AMP	193206
COVER/FUSE/4 WAY	194554
COVER/FUSE/2 WAY	194633
DIODE	187347

410590

Ref. No.	Part No.	Description	Quantity
1	055648	TIE/CABLE 3/16 X 7-1/2	10
2	064260	NUT/HEX LOCK 5/16	4
3	070634	NUT/SERRATED LOCK 1/4	2
4	071401	NUT/HEX INST LOCK 1/4	12
5	077685	ROD/BATTERY HOLDDOWN	1
6	088467	TIE/NYLON 15-1/2	2
7	090666	NUT/HEX SERRATED LOCK 3/8	2
8	095619	CLAMP/HOSE	2
9	NSS	BATTERY/12 VDC, GROUP 31, 950 CCA, 170 RESERVE	1
10	131842	NUT/SPIRALOCK™ 5/16	7
11	137797	NUT/WHIZLOCK SERRATED FLANGE #10	4
12	183814	HORN/WARNING	1
13	184006	SPACER/ALARM/BRACKET	1
14	184560	CLAMP/TUBE 15/16	1
15	189821	ANGLE/BATTERY HOLDDOWN	1
16	193838	CABLE/FEED/POSITIVE/8GA	1
17	193856	SOLENOID	2
18	195740	COVER/ELECTRICAL	2
19	240176	COVER/WIRE HARNESS	1
20	240632	MODULE/TWO-SPEED/RIDE CONTROL	1
21	240768	FOAM/COVER/FUSE	1
22	240769	FOAM/COVER/ELECTRICAL	1
23	241495	HARNESS/CHASSIS	1
24	242149	BRACKET/HARNESS MOUNTING	1
25	242268	ELEC/ASSEMBLY/MTG BRACKET	1
26	242393	ELEC/ASSEMBLY/PLATE	1
27	243659	SPACER 1--5/8	2
28	244567	TRAY/BATTERY	1
29	650449	SCREW/CAP 1/4 X 2-1/2	2
30	650687	BOLT/CARRIAGE 5/16 X 3/4	4
31	650704	BOLT/CARRIAGE 3/8 X 1	2
32	650745	BOLT/CARRIAGE 5/16 X 1-1/4	3
33	651648	SCREW/TAPPING HEX WASHER HEAD THREAD ROLL 5/16 X 3/4	2
34	651776	SCREW/CAP SOCKET HEAD M10 X 55 MM	1
35	653034	NUT/HEX JAM 5/16	4
36	654004	WASHER/FLAT 5/16	4

Rear Light Power Distribution

V330 Models: SN 131020 and Up
V270 Models: SN 021632 and Up

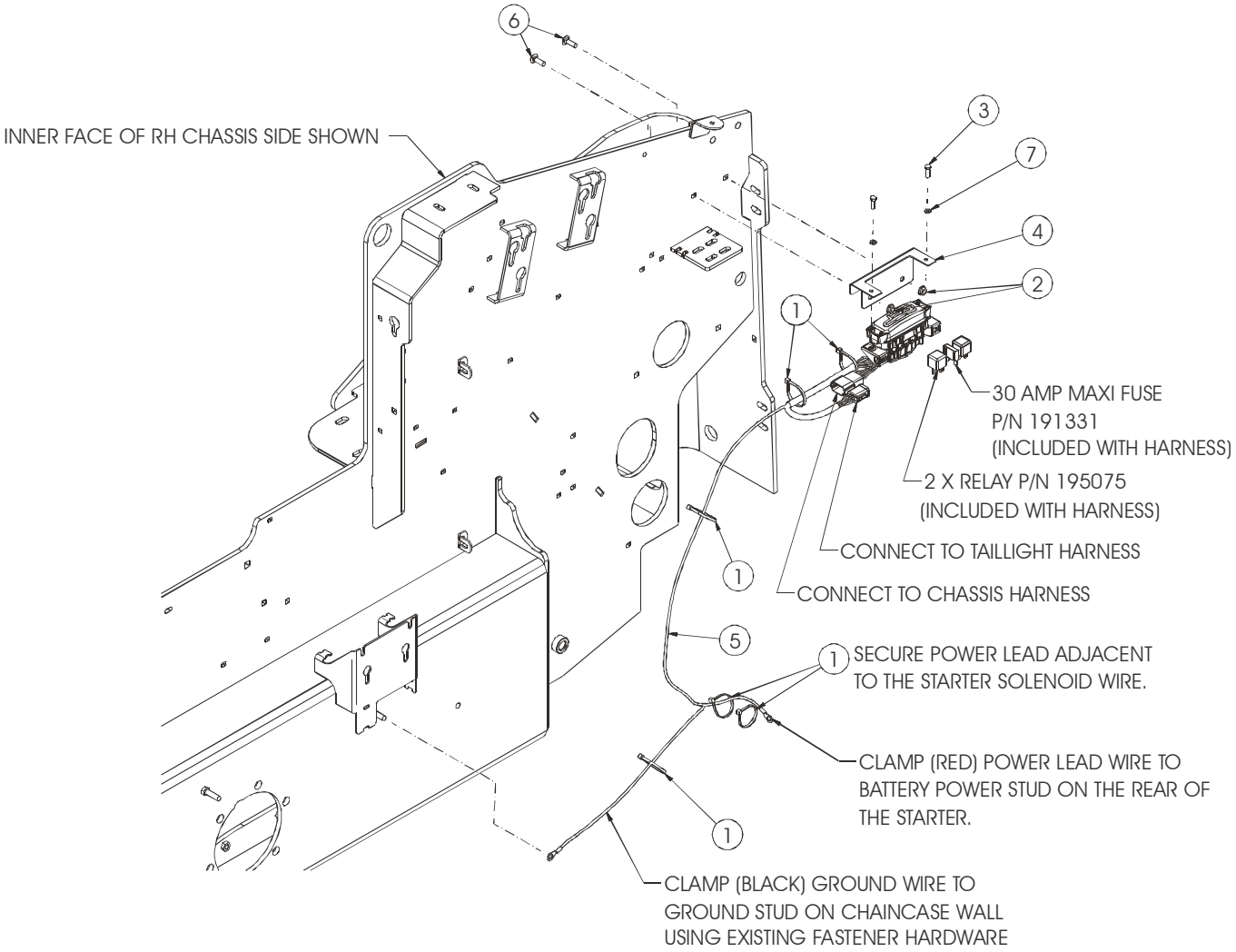

50450032

Ref. No.	Part No.	Description	Quantity
1	055648	TIE/CABLE 3/16 X 7-1/2 BLACK	6
2	210-19470	NUT/LOCK FLANGE SERRATED 5/16	2
3	310-32564	SCREW/CAP M6 X 20 MM	2
4	50350278	BRACKET/MODULE MOUNT	1
5	50350290	HARNESS/LIGHT POWER DISTR	1
6	650573	BOLT/CARRIAGE 5/16 X 1	2
7	654002	WASHER/FLAT 1/4	2

V270 Models: SN 021600 and Before

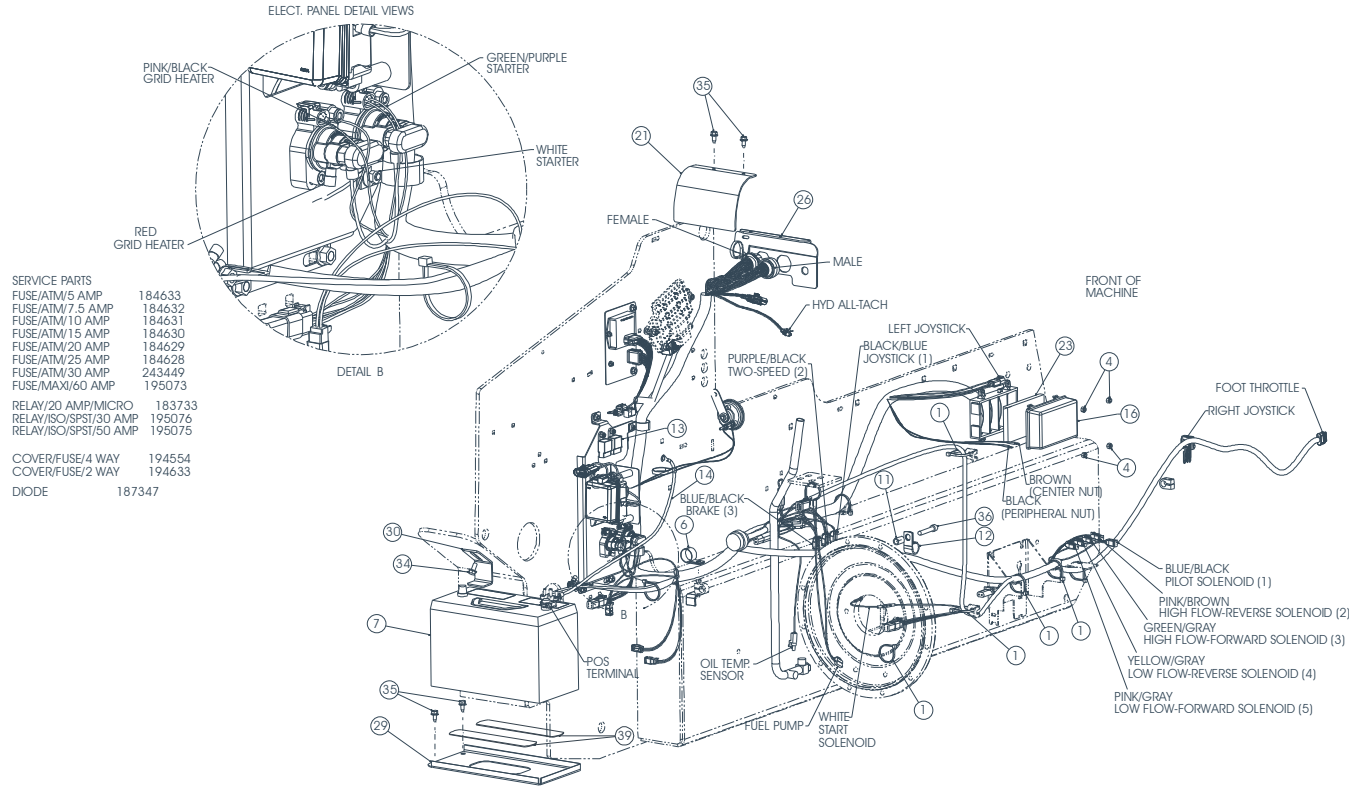

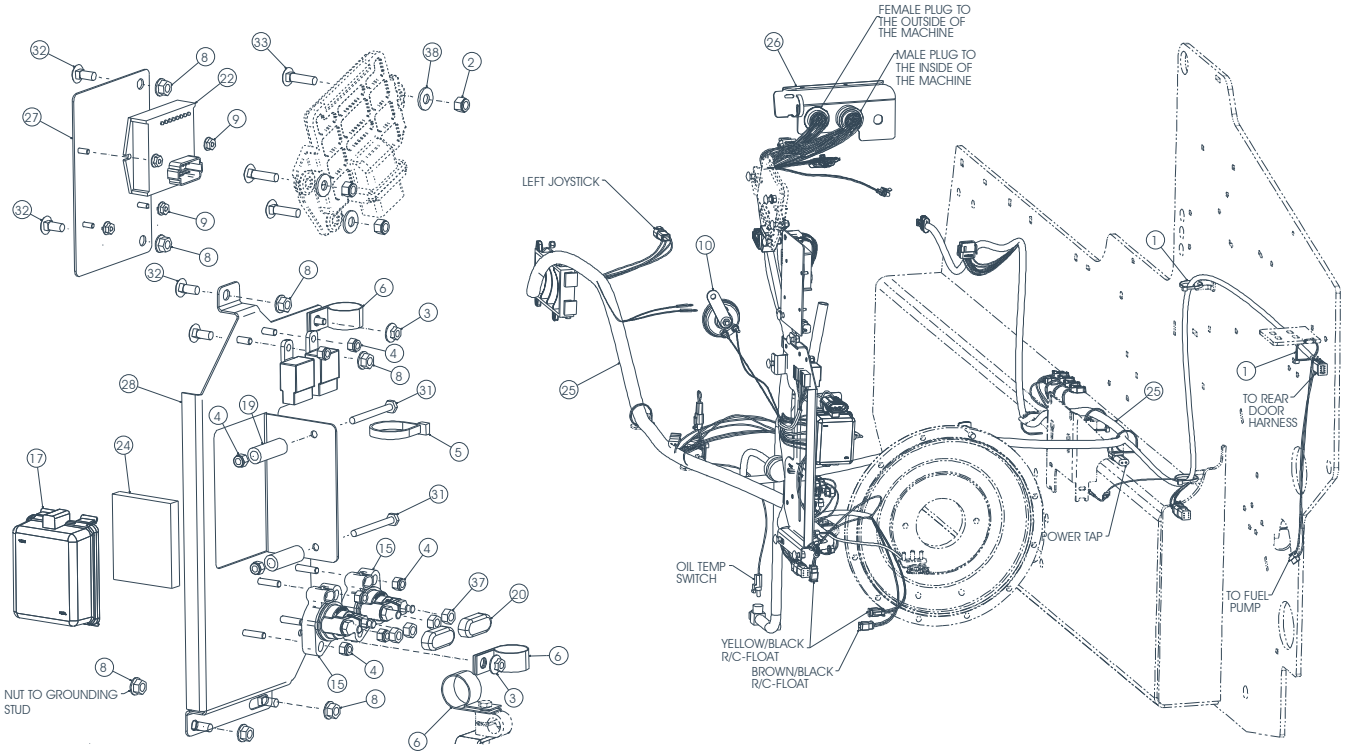

410347

Ref. No.	Part No.	Description	Quantity
1	055648	TIE/CABLE 3/16 X 7-1/2	10
2	064260	NUT/HEX LOCK 5/16	4
3	070634	NUT/SERRATED LOCK 1/4	2
4	071401	NUT/HEX INST LOCK 1/4	12
5	088467	TIE/NYLON 15-1/2	2
6	095619	CLAMP/HOSE	2
7	NSS	BATTERY/12 VDC, GROUP 31, 950 CCA, 170 RESERVE	1
8	131842	NUT/SPIRALOCK™ 5/16	7
9	137797	NUT/WHIZLOCK SERRATED FLANGE #10	4
10	183814	HORN/WARNING	1
11	184006	SPACER/ALARM/BRACKET	1
12	184560	CLAMP/TUBE 15/16	1
13	193206	RELAY 20 A	2
14	193838	CABLE/FEED/POSITIVE/8GA	1
15	193856	SOLENOID	2
16	194554	COVER/FUSE/FOUR-WAY	1
17	194633	COVER/TWO-WAY	1
18	194638	CLAMP/TUBE 5/8	1
19	243537	SPACER 1-3/4	2
20	195740	COVER/ELECTRICAL	2
21	240176	COVER/WIRE HARNESS	1
22	240632	MODULE/TWO-SPEED/RIDE CONTROL	1
23	240768	FOAM/COVER/FUSE	1
24	240769	FOAM/COVER/ELECTRICAL	1
25	241495	HARNESS/CHASSIS	1
26	242149	BRACKET/HARNESS MOUNTING	1
27	242268	ELEC/ASSEMBLY/MTG BRACKET	1
28	242393	ELEC/ASSEMBLY/PLATE	1
29	242439	TRAY/BATTERY	1
30	242565	HOLD DOWN/BATTERY	1
31	650449	SCREW/CAP 1/4 X 2-1/2	2
32	650687	BOLT/CARRIAGE 5/16 X 3/4	4
33	650745	BOLT/CARRIAGE 5/16 X 1-1/4	3
34	651041	SCREW/MACHINE HEX WASHER HEAD 3/8 X 3/4	1
35	651648	SCREW/TAPPING HEX WASHER HEAD THREAD ROLL 5/16 X 3/4	4
36	651776	SCREW/CAP SOCKET HEAD M10 X 55 MM	1
37	653007	NUT/HEX 5/16	4
38	654004	WASHER/FLAT 5/16	4
39	121030	STRIP/NON-SKID SURFACE	2

ROPS/FOPS Lighting Harness

Standard and

(EU) Completing

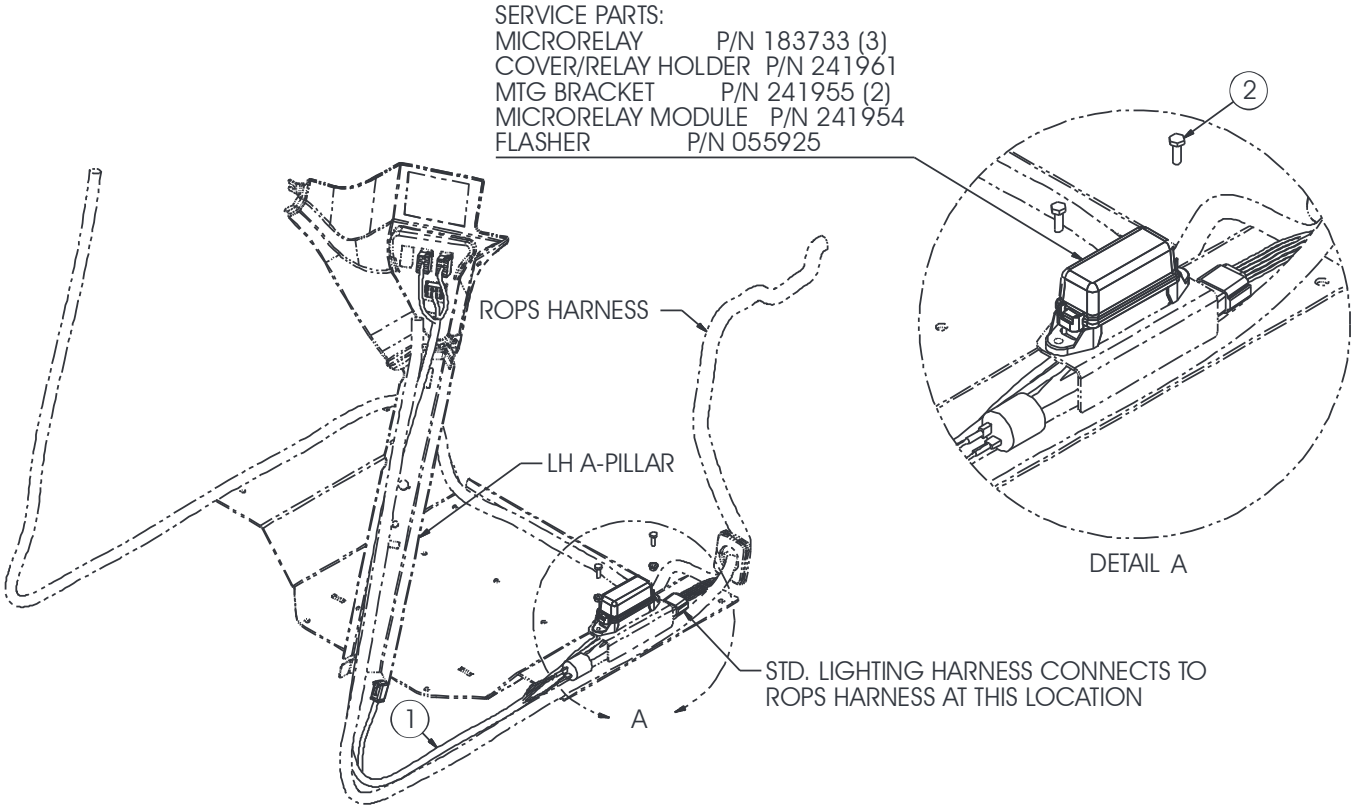

410276_410248

Ref. No.	Part No.	Description	Quantity (EU) / Standard
1	241227	HARNESS/CAB - STANDARD LIGHTING	1
	055925	FLASHER	1
	241178	HARNESS/CAB - (EU) LIGHTING	1
	183733	RELAY/MICRO 20 A	3
	241961	COVER/RELAY HOLDER	1
	241955	BRACKET/MOUNTING	2
	241954	MODULE/MICRO RELAY	1
	055925	FLASHER	1
2	650448	SCREW/CAP 1/4 X 3/4 - (EU) LIGHTING	2

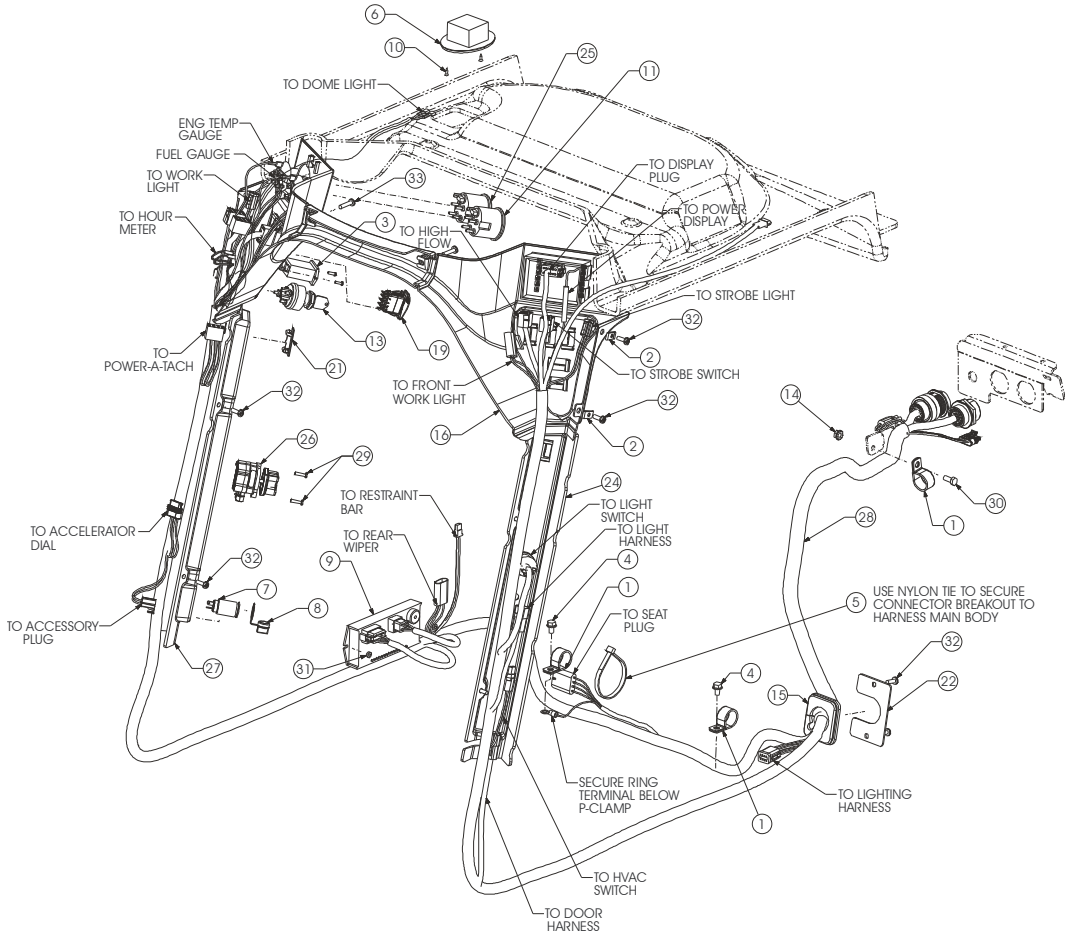
TO DOME LIGHT
ENG TEMP GAUGE
FUEL GAUGE
TO WORK LIGHT
TO HOUR METER
TO HIGH FLOW
TO DISPLAY PLUG
TO POWER DISPLAY
TO STROBE LIGHT
TO STROBE SWITCH
TO POWER-A-TACH
TO FRONT WORK LIGHT
TO RESTRAINT BAR
TO LIGHT SWITCH
TO LIGHT HARNESS
TO REAR WIPER
TO ACCELERATOR DIAL
TO ACCESSORY PLUG
TO SEAT PLUG
USE NYLON TIE TO SECURE CONNECTOR BREAKOUT TO HARNESS MAIN BODY
SECURE RING TERMINAL BELOW P-CLAMP
TO LIGHTING HARNESS
TO HVAC SWITCH
TO DOOR HARNESS

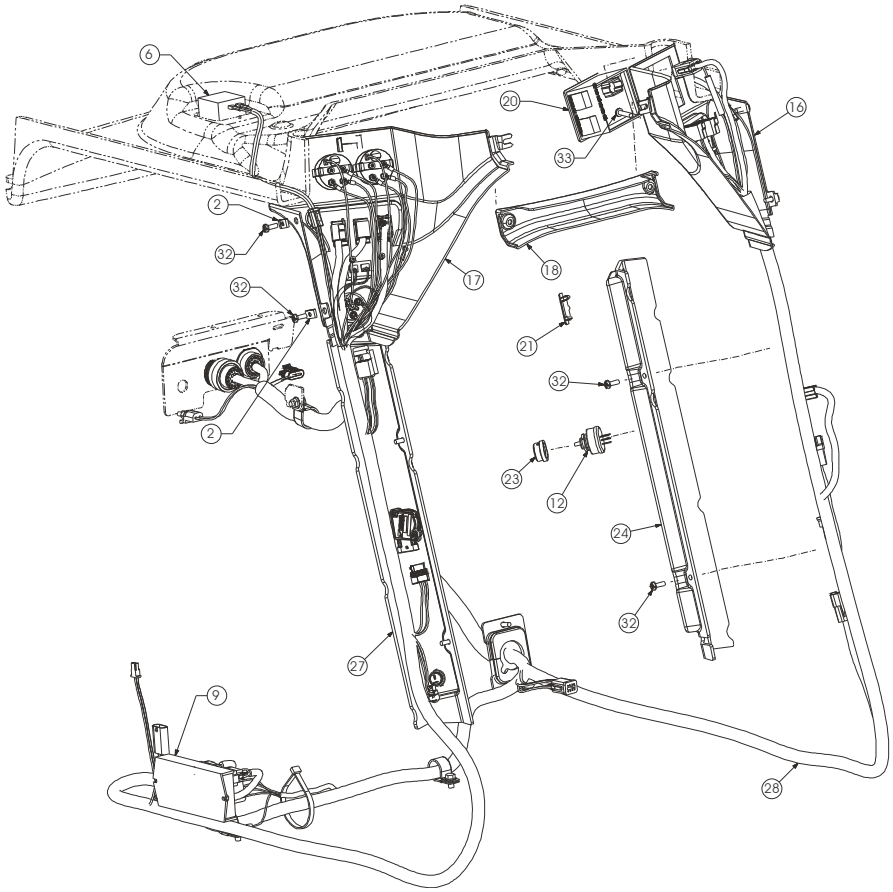

410348

Ref. No.	Part No.	Description	Quantity
1	058805	CLAMP/HOSE 1-1/8 X 13/32 HOLE	3
2	067750	NUT/SPEED	4
3	072340	GAUGE/HOURMETER	1
4	081379	SCREW/CAP LOCKING 5/16 X 1/2	2
5	088467	TIE/CABLE 19/64 X 14-1/2	1
6	137497	LIGHT/DOME	1
7	137602	CONNECTOR/12V POWER PORT	1
8	137603	COVER/12V POWER PORT	1
9	137753	MODULE/CONTROL INTERLOCK	1
10	137821	SCREW/TAPPING CROSS RECESSED COUNTERSUNK HEAD #6 X 1/2	2
11	183634	GAUGE/FUEL LEVEL	1
12	191477	SWITCH/LIGHT	1
13	195087	SWITCH/IGNITION	1
	073694	KEY/IGNITION SWITCH (SET OF 2)	1
14	210-19470	NUT/LOCK FLANGE SERRATED 5/16	1
15	241142	PLUG/PASS-THROUGH	1
16	242111	PANEL/INSTRUMENT LEFT	1
17	242112	PANEL/INSTRUMENT RIGHT	1
18	242113	CROSSPIECE/INSTRUMENT PANEL	1
19	242291	SWITCH/PARK BRAKE	1
20	242608	DISPLAY MODULE/ANALOG	1
21	242636	PLUG/PANEL	9
22	242712	PLATE/BACKING	1
23	191635	KNOB/LIGHT SWITCH	1
24	244569	“A” PILLAR/LEFT	1
25	240084	GAUGE/TEMPERATURE	1
26	50351312 b	THROTTLE/HAND	1
	242392 a	DIAL/ACCELERATOR	1
27	50351313 b	COVER/A-PILLAR RH TF	1
	244601 a	“A” PILLAR/RIGHT	1
28	50352408 b	HARNESS/CAB ELECTRICAL	1
	241040 a	HARNESS/CAB ELECTRICAL	1
29	50657022 b	SCREW/CAP BUTTON HEAD #10 X 3/4	2
	651775 a	SCREW/MACHINE FLAT C-SUNK HEAD CROSS RECESSED M3 X 10 MM	2
30	650486	SCREW/CAP 5/16 X 3/4	1
31	650550	NUT/HEX MACHINE #10	2
32	651308	SCREW/MACHINE PAN HEAD CROSS RECESSED 1/4 X 3/4	10
33	651672	SCREW/MACHINE PAN HEAD CROSS RECESSED 1/4 X 1-1/8	2

a) V270 Models: SN 022133 and Before (see exemptions in note b). V330 Models: SN 131525 and Before (see exemptions in note b).
b) V270 Models: SN 022134 and Up, plus 022120, 022121, 022129 and 022130. V330 Models: SN 131526 and Up, plus 131513-131516 and 131524.

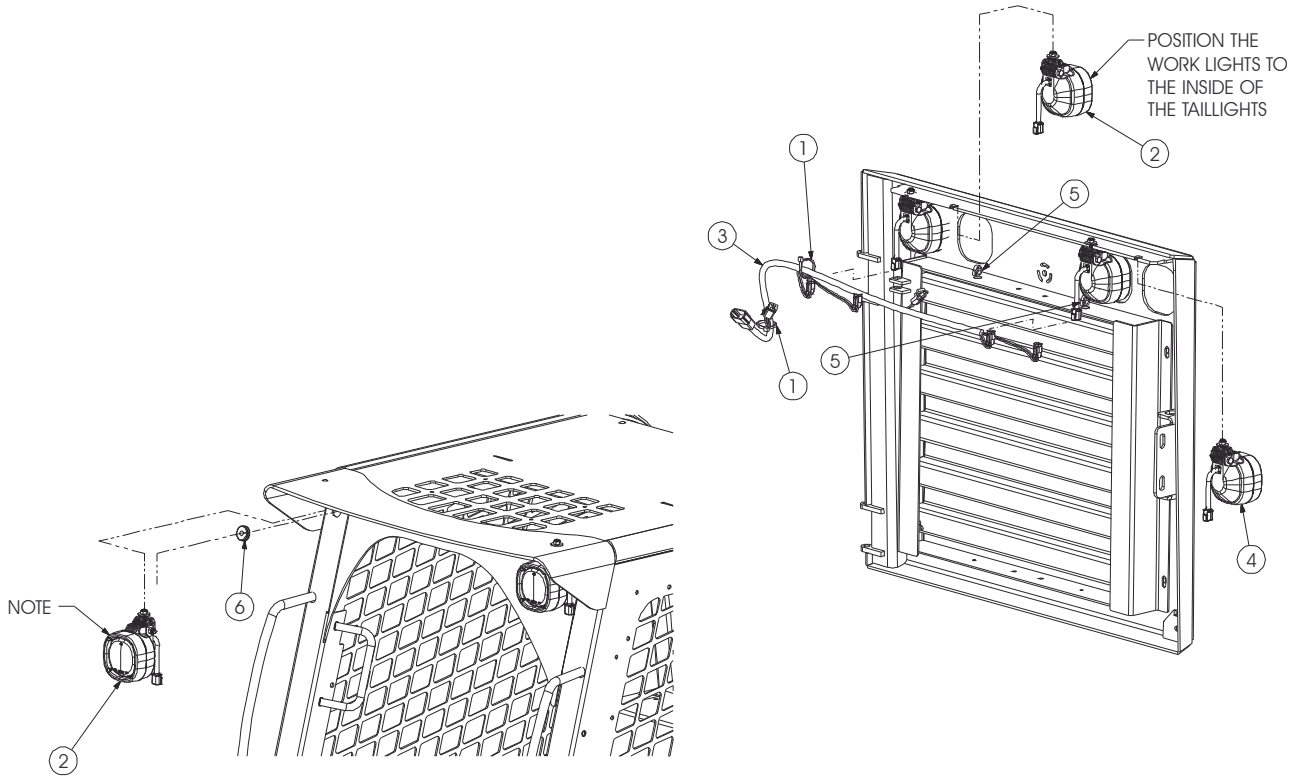

NOTE:
FORWARD WORK LIGHTS ARE TO BE INSTALLED WITH THE LIGHT HOUSING ANGLED 10 DEGREES DOWNWARD FROM THE HORIZONTAL AND 10 DEGREES OUT FROM THE CENTERLINE OF THE MACHINE.

410350

Ref. No.	Part No.	Description	Quantity
1	074091	TIE/NYLON	2
2	241117 a	LIGHT / WHITE / 55W	4
3	241532	HARNESS/TAILLIGHT	1
4	242386 b	LIGHT / RED / 35W	2
5	242553	CLIP/WIRE HARNESS	2
5	242633	GROMMET/SPLIT 3/8 ID	2

a) Order replacement 55 W bulb part number 139529.
b) Order replacement 35 W bulb part number 139530.

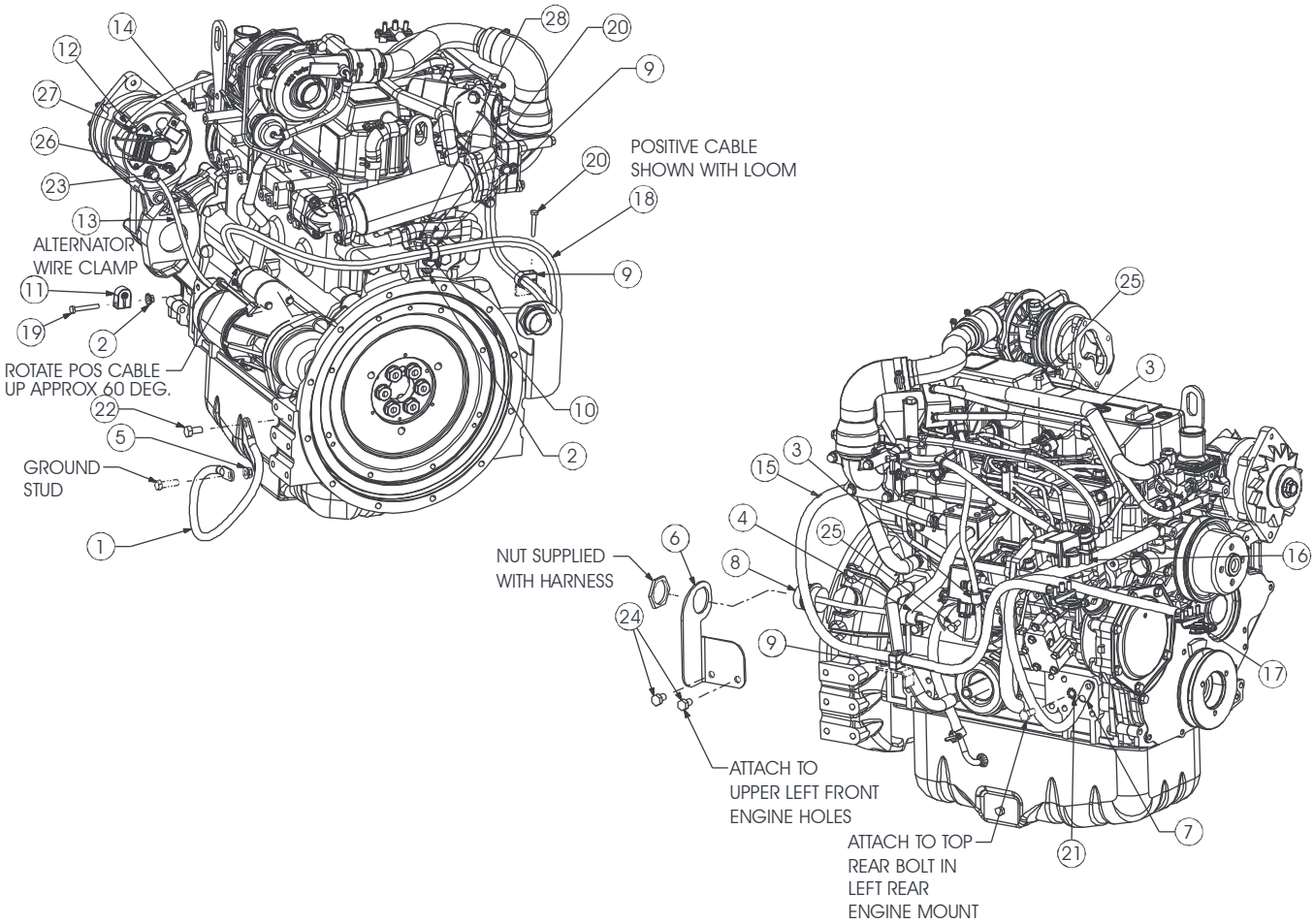
POSITIVE CABLE
SHOWN WITH LOOM
ALTERNATOR
WIRE CLAMP
ROTATE POS CABLE
UP APPROX 60 DEG.
GROUND
STUD
NUT SUPPLIED
WITH HARNESS
ATTACH TO
UPPER LEFT FRONT
ENGINE HOLES
ATTACH TO TOP
REAR BOLT IN
LEFT REAR
ENGINE MOUNT

410349

Ref. No.	Part No.	Description	Quantity
1	054985	CABLE/BATTERY	1
2	071401	NUT/HEX LOCK 1/4	3
3	076147	CLAMP/HOSE 1/2 X 13/32 HOLE	2
4	128007	CLAMP/HOSE 5/8 X 13/32 HOLE	1
5	134852	NUT/SPIRALOCK™ 3/8	1
6	193588	BRACKET/HARNESS	1
7	193837	CABLE/BATTERY/NEGATIVE	1
8	193840	HARNESS/ENGINE	1
9	194638	CLAMP/TUBE 5/8	3
10	50350325	BRACKET/CABLE	1
11	194738	CLAMP/TUBE 25/64	1
12	194797	P-CLAMP 1/4	1
13	194945	WIRE/ALTERNATOR	1
14	195009	SENDER/TEMPERATURE	1
15	241456	CABLE/BATTERY/POSITIVE	1
16	243319	ASSY/POSITIVE/POST	1
17	243321	CLAMP/BATTERY/NEGATIVE	1
18	274133	LOOM/BATTERY CABLE	1
19	650419	SCREW/CAP 1/4 X 1-3/4	1
20	650588	SCREW/CAP 1/4 X 1-1/2	3
21	654042	WASHER/LOCK EXTERNAL TOOTH 3/8	1
22	656006	SCREW/CAP M10 X 20 MM	1
23	656048	NUT/HEX M8	2
24	656090	SCREW/CAP M10 X 16 MM	2
25	656093	SCREW/CAP M8 X 16 MM	3
26	656100	NUT/HEX M5	1
27	656163	SCREW/CAP M5 X 10 MM	1
28	656171	SCREW/CAP M8 X 14 MM	1

Electrical Disconnect Switch - (EU)

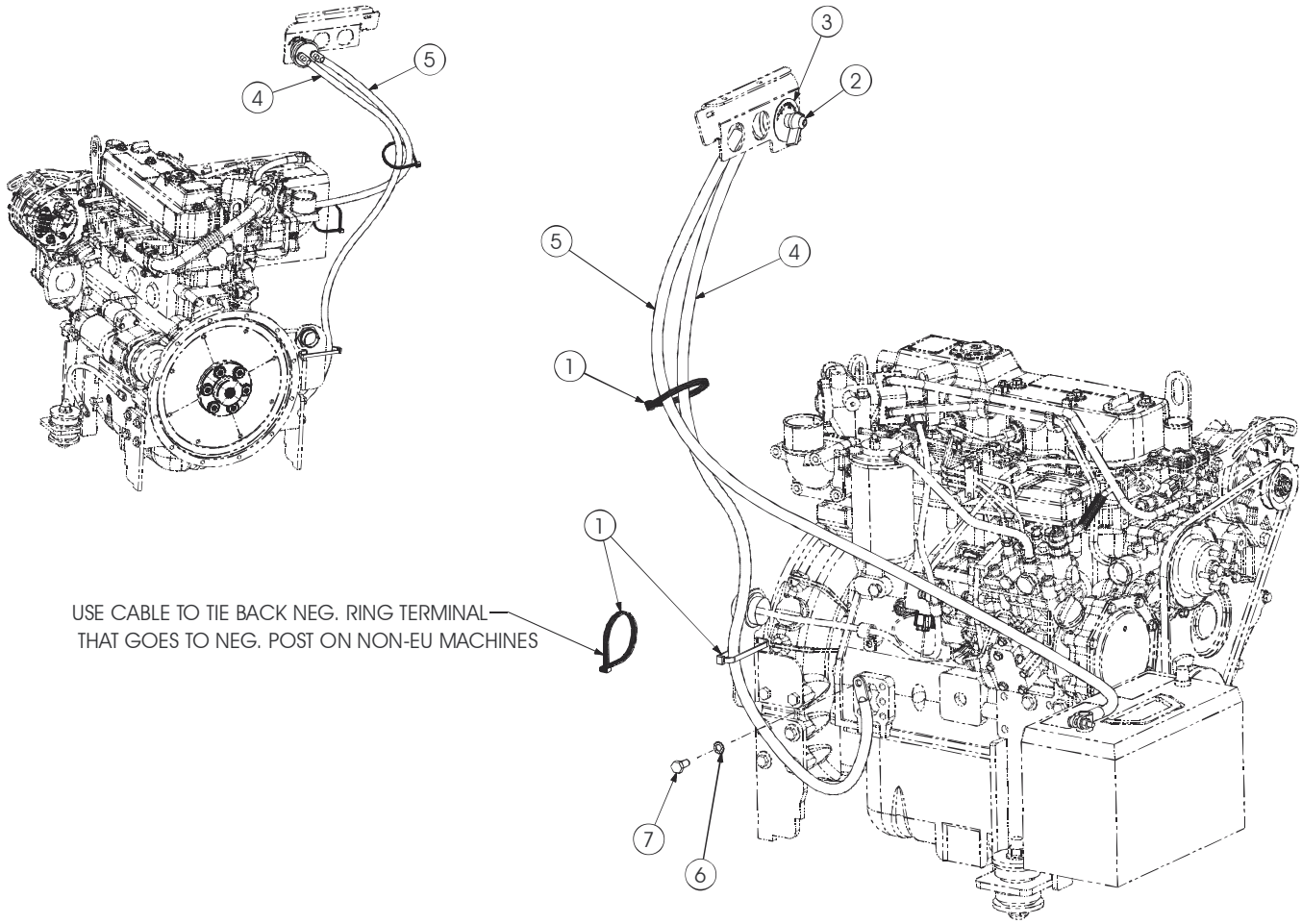

410493

Ref. No.	Part No.	Description	Quantity
1	088467	TIE/CABLE 19/64 X 14-1/2	3
2	091666	SWITCH/DISCONNECT	1
3	091667	PLATE/FACE	1
4	240583	CABLE/NEGATIVE BATTERY 57.00	1
5	243526	CABLE/NEGATIVE	1
6	654042	WASHER/LOCK EXTERNAL TOOTH 3/8	1
7	656006	SCREW/CAP M10 X 20 MM	1

High-Flow

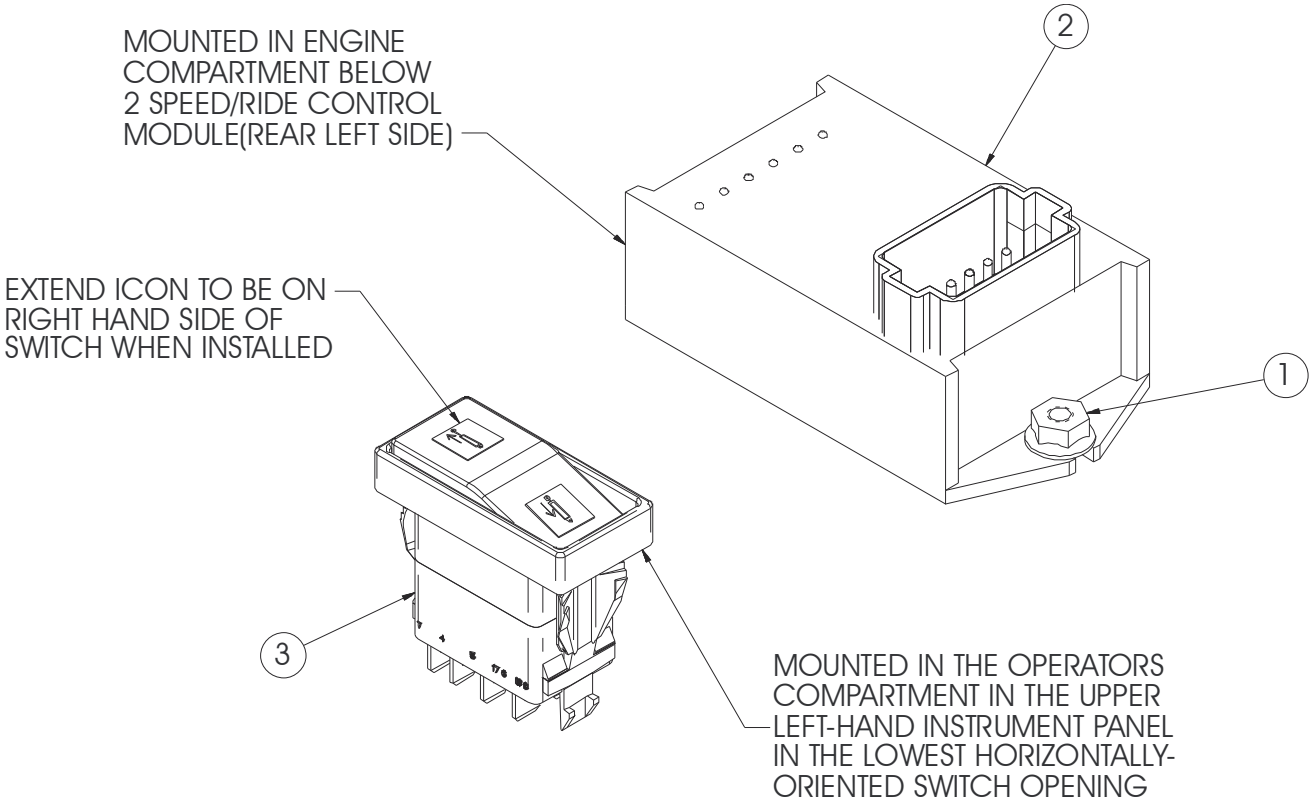

410299

Ref. No.	Part No.	Description	High-Flow Quantity
1	137797	NUT/WHIZLOCK SERRATED FLANGE #10	2
2	193934	MODULE/HIGH FLOW	1
3	242308	SWITCH/HIGH FLOW	1

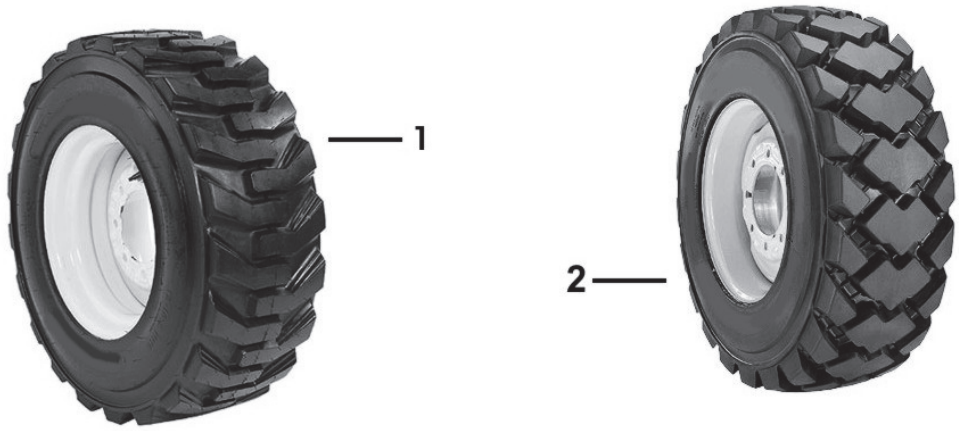
1
2

Ref. No.	Part No.	Description	Quantity
1	811294 b	ASSEMBLY/WHEEL 12 X 16.5 HEAVY DUTY 10-PLY FLOTATION WIDE SIDEWALL	1
	240364	WHEEL 16.5 X 9-3/4	1
	REFa	TIRE/HEAVY DUTY 12 X 16.5 10-PLY HD2000 II	1
	191020	STEM/VALVE	1
1	811295 b	ASSEMBLY/WHEEL 12 X 16.5 HEAVY DUTY 10-PLY FLOTATION WIDE SIDEWALL FOAM-FILLED	1
	240364	WHEEL 16.5 X 9-3/4	1
	REFa	TIRE/HEAVY DUTY 12 X 16.5 10-PLY HD2000 II	1
	191020	STEM/VALVE	1
1	808216 b	ASSEMBLY/WHEEL 33 X 15.50 X 16.5 12-PLY EXTRA WIDE / WIDE SIDEWALL	1
	137243	WHEEL 12 X 16.5	1
	REFa	TIRE/HEAVY DUTY 33 X 16.5 X 15.5	1
	191020	STEM/VALVE	1
1	807728	ASSEMBLY/WHEEL 14 X 17.5 12-PLY FLOTATION - HEAVY DUTY WIDE SIDEWALL	1
	128508	WHEEL 17.5 X 10.5 8-BOLT	1
	REFa	TIRE/HEAVY DUTY 14 X 17.5 14-PLY	1
	191020	STEM/VALVE	1
2	811296 b	ASSEMBLY/WHEEL 12 X 16.5 12-PLY H/E SEVERE DUTY	1
	240364	WHEEL 16.5 X 9-3/4	1
	REFa	TIRE/SEVERE DUTY 12 X 16.5	1
	191020	STEM/VALVE	1
2	811297 b	ASSEMBLY/WHEEL 12 X 16.5 12-PLY H/E SEVERE DUTY FOAM-FILLED	1
	240364	WHEEL 16.5 X 9-3/4	1
	REFa	TIRE/SEVERE DUTY 12 X 16.5	1
	191020	STEM/VALVE	1
2	811298 b	ASSEMBLY/WHEEL 12 X 16.5 HEAVY DUTY 10-PLY FLOTATION QUIK GEL	1
	240364	WHEEL 16.5 X 9-3/4	1
	REFa	TIRE/HEAVY DUTY 12 X 16.5	1
	191020	STEM/VALVE	1
2	810146	ASSEMBLY/WHEEL 14 17.5 SEVERE DUTY 14-PLY FLOTATION	1
	128508	WHEEL 17.5 X 10.5 8-BOLT	1
	REFa	TIRE/HEAVY DUTY 14 X 17.5 14-PLY	1
	191020	STEM/VALVE	1
2	810871 b	ASSEMBLY/WHEEL SOLID FLEX 12 X 16.5 LEFT	1
	810872 b	ASSEMBLY/WHEEL SOLID FLEX 12 X 16.5 RIGHT	1
2	810949	ASSEMBLY/WHEEL SOLID FLEX 14 X 17.5 LEFT	1
	810950	ASSEMBLY/WHEEL SOLID FLEX 14 X 17.5 RIGHT	1
3	811255	WHEEL/SOLID RUBBER 8.00 X 16 (NOT SHOWN)	1

a) Purchase equivalent-quality tires for your skid-steer loader. Contact your dealer for replacement tire information.
b) Not used on V330 models.

FOUR-POINT LIFT ASSEMBLY

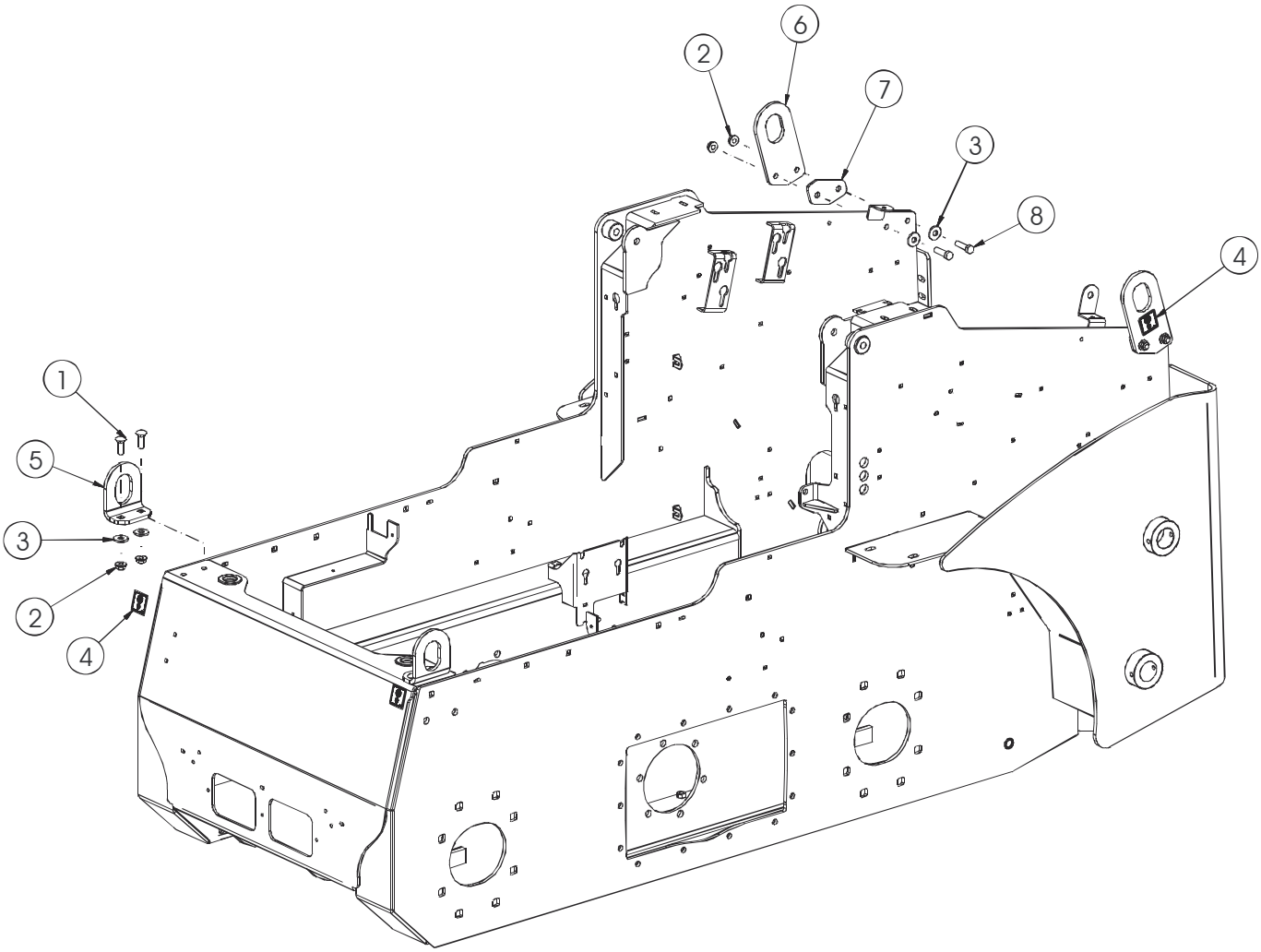

410502

Ref. No.	Part No.	Description	Quantity
1	030-31934	BOLT/CARRIAGE 1/2 X 1-1/2	4
2	134853	NUT/SPIRALOCK™ 1/2	8
3	134966	WASHER/FLAT HEAT-TREATED 1/2	8
4	137718	DECAL/LIFT HOOK	4
5	243548	LIFT EYE/FOUR-POINT	2
6	243549	LIFT EYE/FOUR-POINT	2
7	243550	PLATE/SPACER	2
8	651366	SCREW/CAP 1/2 X 1-3/4	4

EU Completing

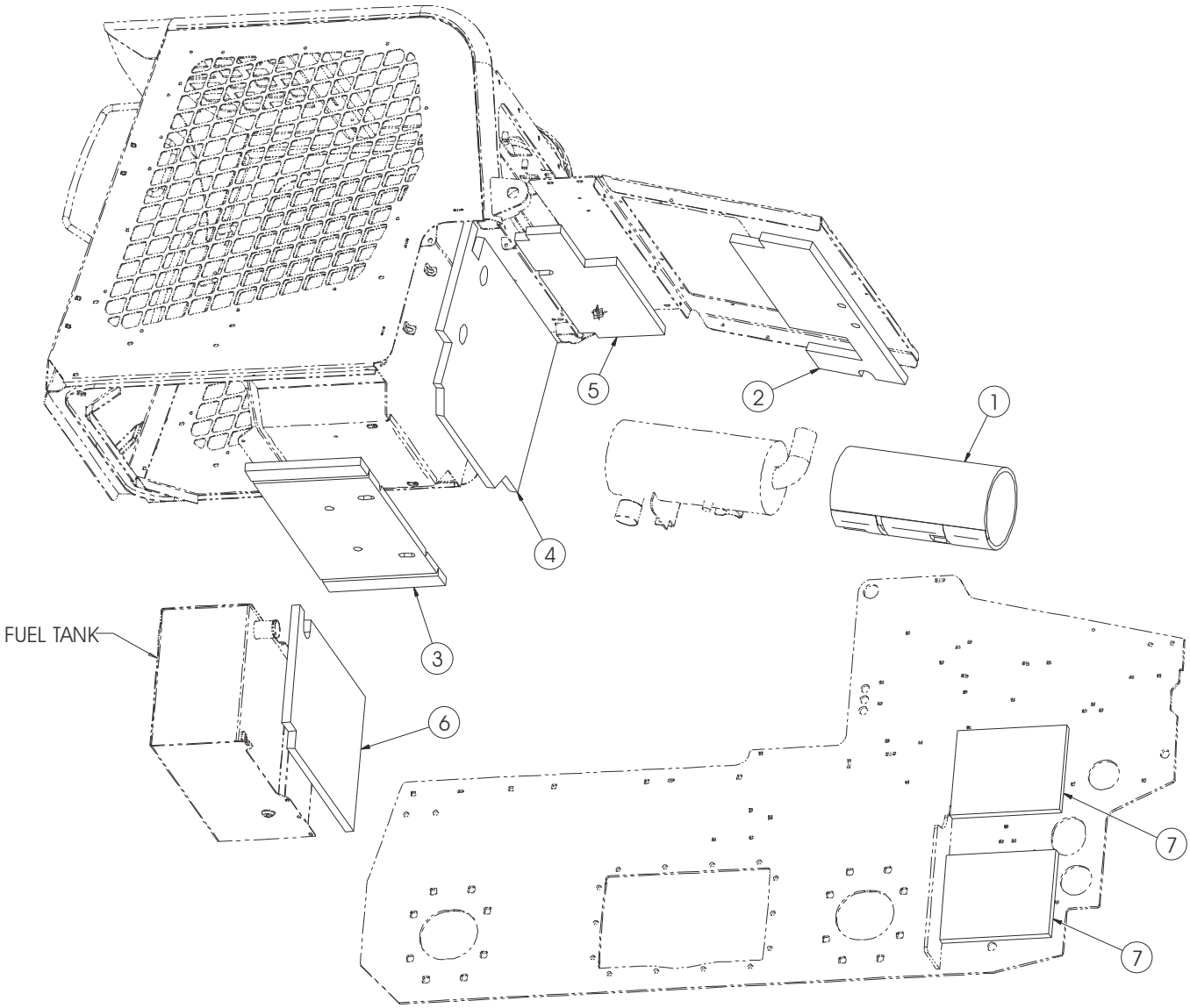

50450115

Ref. No.	Part No.	Description	Quantity
1	243126	PAD/INSULATION/MUFFLER	1
2	50351212	FOAM/ENGINE COVER	1
3	50351214	FOAM/SEAT PAN	1
4	50351233	FOAM/ROPS BACK	1
5	50351237	FOAM/UPPER ENG COVER	1
6	50351238	FOAM/FUEL TANK	1
7	50351264	FOAM/RISER	2

SECTION NOTES

GENERAL INFORMATION

CAUTION

ALWAYS follow safety precautions on decals. Replace decals if they become damaged or if the unit is repainted. If repainting, BE SURE that all applicable decals are affixed in their proper locations.

Decal location information assists in the selection and application of new decals, in the event the original decals become damaged or the machine is repainted.

For decal replacement compare the location photographs to your machine BEFORE starting to refinish. Check off each required decal using the illustrated reference number. Find the part number, description and quantity. Refer to the illustration for replacement locations. Refer to Safety chapter of the Operator's Manual for information on the safety decals.

NEW DECAL APPLICATION

Surfaces MUST be free of dirt, dust, grease and foreign material before applying the decal. Remove smaller portion of decal backing paper and apply the exposed adhesive to the clean surface, maintaining proper position and alignment. Peel off remaining backing paper and apply hand pressure to smooth out the decal surface.

Specific decal part numbers for type of model, control option and the Gehl logo must be ordered separately.

PAINT FINISH. Use list below to order paint:

167788	One Gallon Gehl Yellow
167789	6-Pack Spray Cans Gehl Yellow
167754	One Gallon Gun Metal Gray
167755	6-Pack Spray Cans Gun Metal Gray
167792	One Gallon Red
167793	6 (12 oz. Spray Cans) Red

DECALS

Ref. No.	Part No.	Description	Quantity Domestic	Quantity EU
1	073458	STRIP/NON-SKID SURFACE	1	1
2	131050	KEYCHAIN (NOT SHOWN)	1	1
3	137545	REFLECTOR/RED	2	2
4	137632	DECAL/HYDRAULIC OIL	1	1
5	137634	DECAL/DIESEL FUEL	1	1
6	137660	DECAL/ETHER	1	1
7	137661	DECAL/TIE DOWN	4	4
8	138711	DECAL/HYDRAGLIDE™	2	2
9	140516	DECAL/FLAG	1	1
10	190646	DECAL/HYDRALOC™	1	1
11	194862	DECAL/FUSE	1	1
12	194863	DECAL/FUSE	1	1
13	195775	DECAL/FUEL/SULFUR	1	1
14	242151	DECAL/LIGHTS	1	1
15	242152	DECAL/IGNITION SWITCH	1	1
16	50351322 b	DECAL/ACCELERATOR DIAL	1	1
	242153 a	DECAL/ACCELERATOR DIAL	1	1
17	242247	DECAL/SERVICE	1	1
18	242582	DECAL/WARNING MANUAL	1	-
	242568	DECAL/WARNING MANUAL	-	1
19	137637	DECAL/DANGER LIFT ARM	1	-
	137848	DECAL/DANGER LIFT ARM	-	1
20	242397	DECAL/DANGER WARNING	1	-
	242284	DECAL/DANGER WARNING	-	1
	242408	DECAL/DANGER WARNING	-	1
21	184214	DECAL/WARNING ROPS	1	-
	184711	DECAL/WARNING ROPS	-	1
22	137657	DECAL/WARNING GENERAL	1	-
	137845	DECAL/WARNING GENERAL	-	1
23	137658	DECAL/DANGER HOT SURFACE	1	-
	137846	DECAL/DANGER HOT SURFACE	-	1
24	137755	DECAL/ATTACH BRACKET	1	-
	137852	DECAL/ATTACHMENT BRACKET	-	1
25	137655	DECAL/DANGER NO RIDERS	2	-
	137844	DECAL/DANGER NO RIDERS	-	2
26	242236	DECAL/SAFETY SHUTDOWN	1	-
	242246	DECAL/SAFETY SHUTDOWN	-	1
27	242260	DECAL/WARNING GENERAL	1	-
	242590	DECAL/WARNING GENERAL	-	1
28	132166	TAG/RIP CORD	1	1
29	132294	RING	1	1
43	121030	STRIP/NON-SKID SURFACE	3	3
44	184215	DECAL/JACK	2	2
45	137718	DECAL/LIFT HOOK (PART OF A LIFT KIT)	4	4

a) V270 Models: SN 022133 and Before (see exemptions in note b). V330 Models: SN 131525 and Before (see exemptions in note b).
b) V270 Models: SN 022134 and Up, plus 022120, 022121, 022129 and 022130. V330 Models: SN 131526 and Up, plus 131513-131516 and 131524.

Model Designation Decals

Ref. No.	Part No.	Description	Quantity
30	242796	DECAL/V270 RIGHT	1
	245162	DECAL/V330 RIGHT	1
31	242807	DECAL/V270 LEFT	1
	245163	DECAL/V330 LEFT	1

Gehl Decals

Ref. No.	Part No.	Description	Quantity
32	183935	DECAL/GEHL 5-1/2 X 23-1/2	2
33	183963	DECAL/GEHL 3-3/4 X 16	1
34	242811	DECAL/GEHL 2 X 8-13/16	1

Control Decals

Ref. No.	Part No.	Quantity Description	DJS	H/F
35	190954	DECAL/DUAL JOYSTICK RIGHT	1	-
	194865	DECAL/HAND AND FOOT RIGHT	-	1
36	184526	DECAL/DUAL JOYSTICK LEFT	1	-
	194864	DECAL/HAND AND FOOT LEFT	-	1

Option Decals

Ref. No.	Part No.	Description	Quantity
37	184139	DECAL/HIGH FLOW	1
38	184116	DECAL/TWO-SPEED	1
39	184357	DECAL/POWER-A-TACH	1
40	139107	DECAL/LATCHING LEFT	1
41	139109	DECAL/LATCHING RIGHT	1
42	139101	DECAL/POWER-A-TACH	1

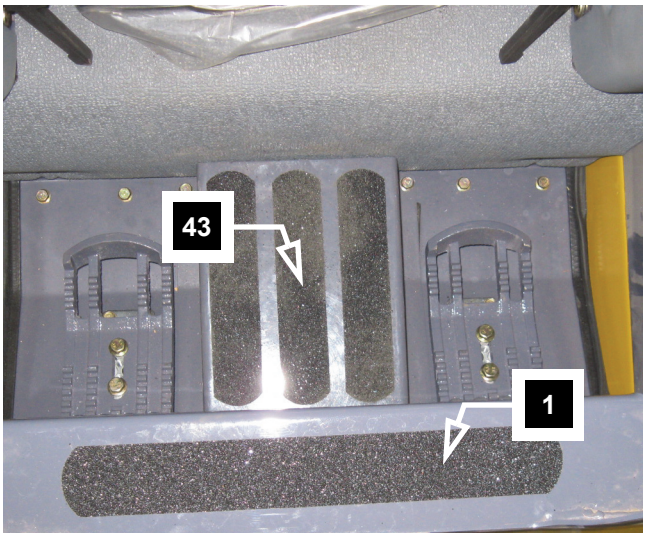
43
1

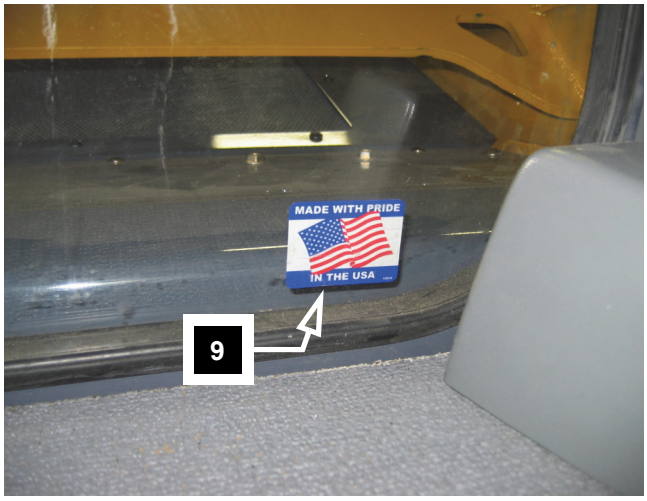
MADE WITH PRIDE
IN THE USA
9

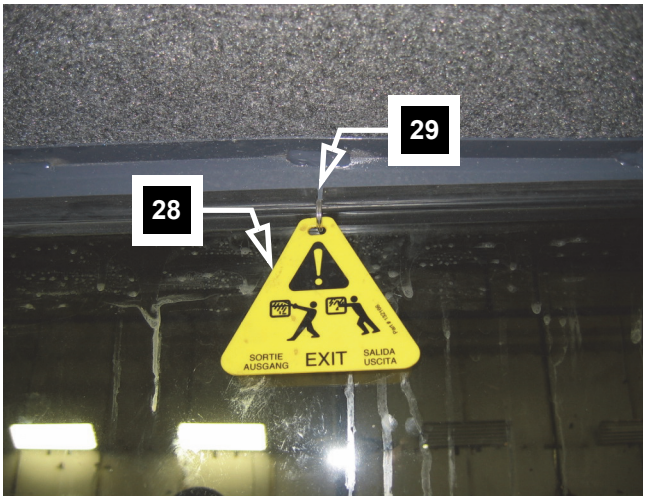
29
28
SORTIE
AUSGANG
EXIT
SALIDA
USCITA

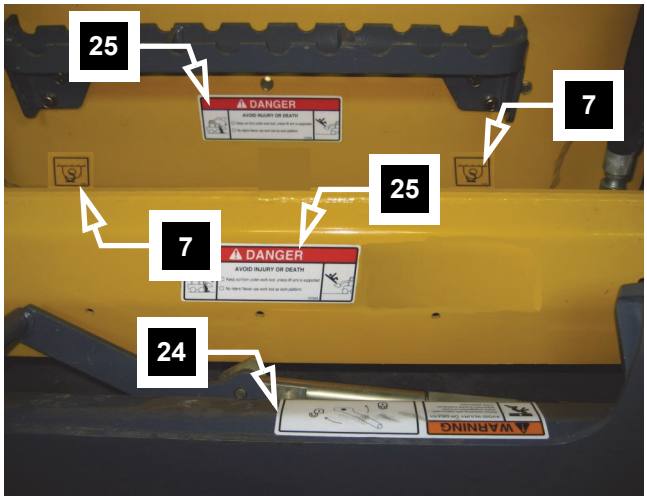
25
DANGER
7
25
7
DANGER
AVOID INJURY OR DEATH
24
WARNING

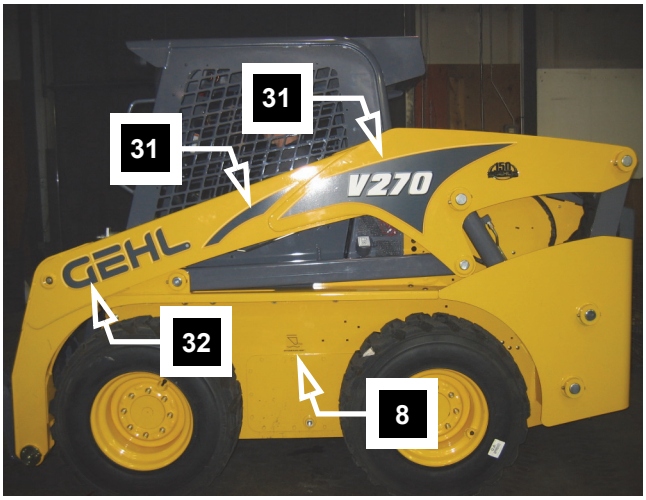
31
31
V270
GEHL
32
8

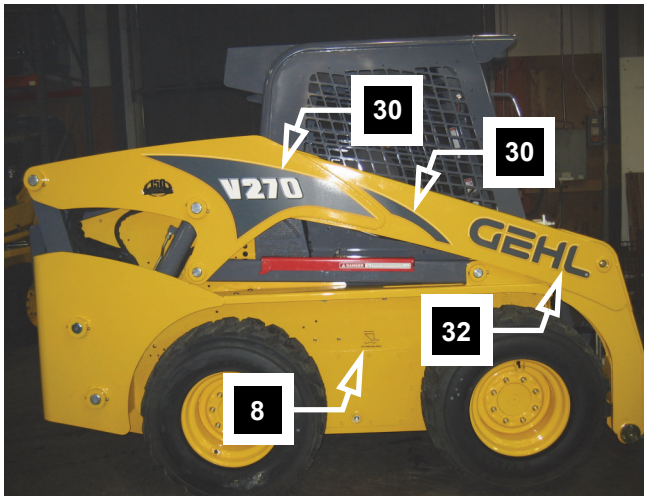
30
30
V270
GEHL
32
8

19
DANGER

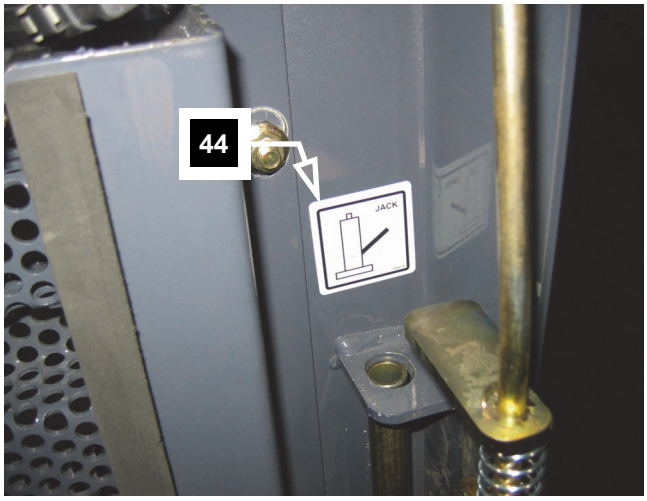
44
JACK

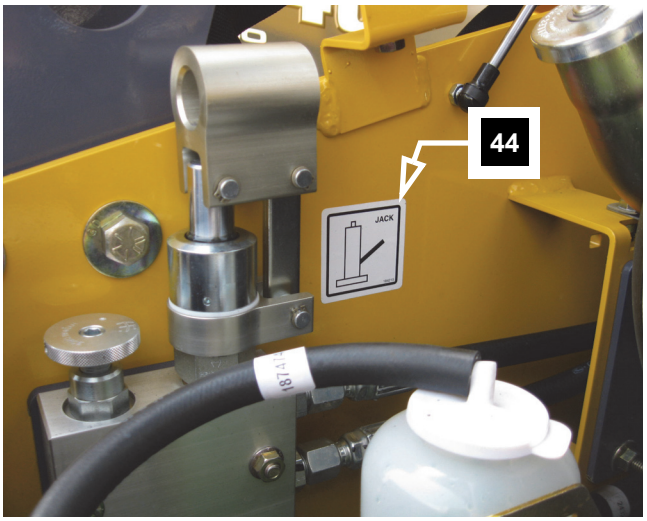
44
JACK

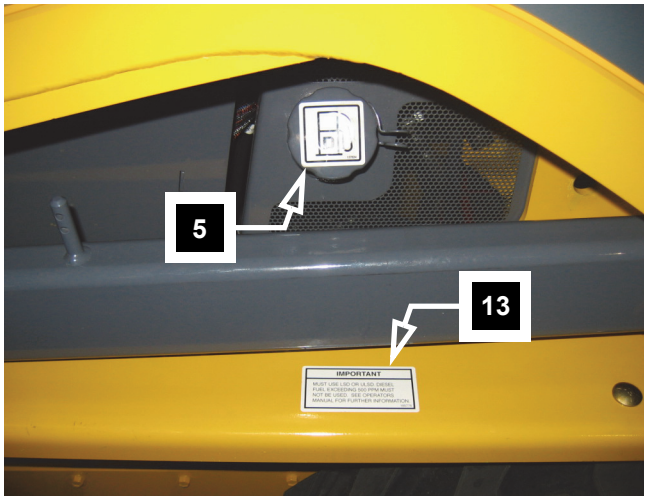
5
13
IMPORTANT

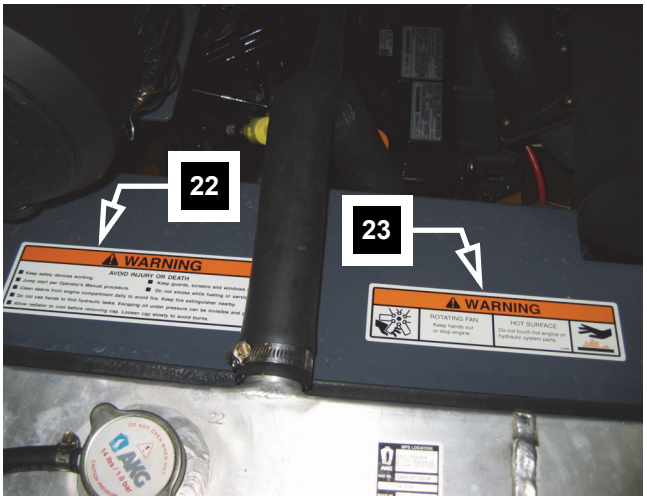
22
23
WARNING
AVOID INJURY OR DEATH
WARNING
ROTATING FAN
HOT SURFACE

High-Flow
Power-A-Tach™
GEHL
37
39
DANGER
DANGER

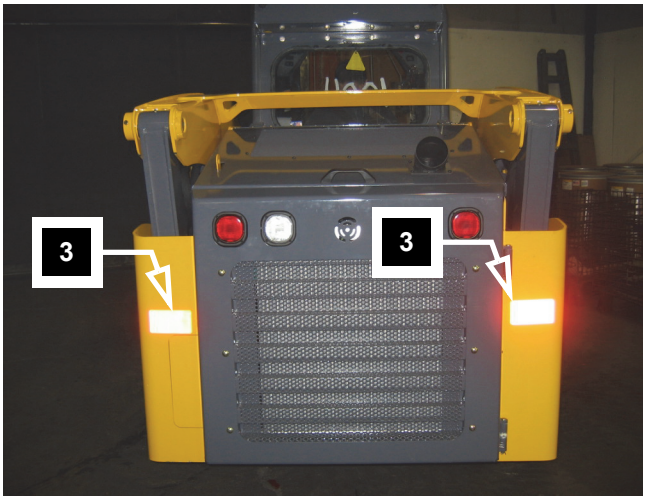
3
3

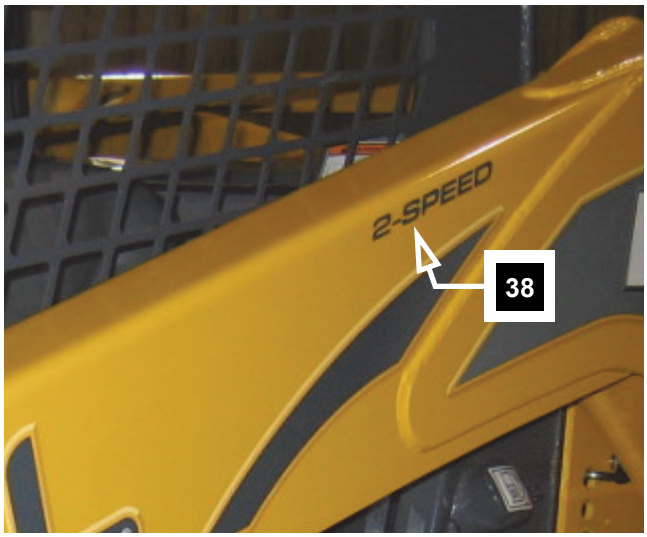
2-SPEED
38

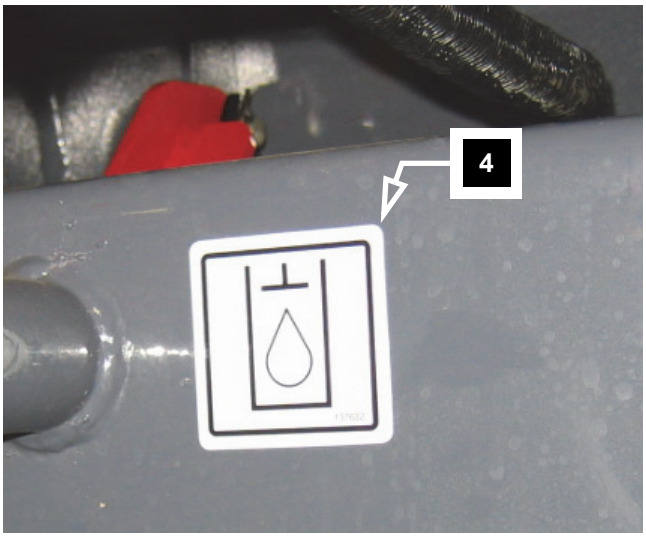
4

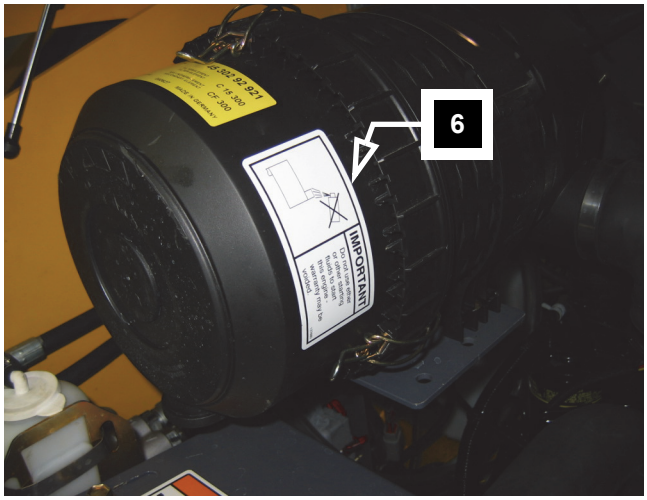
6
IMPORTANT

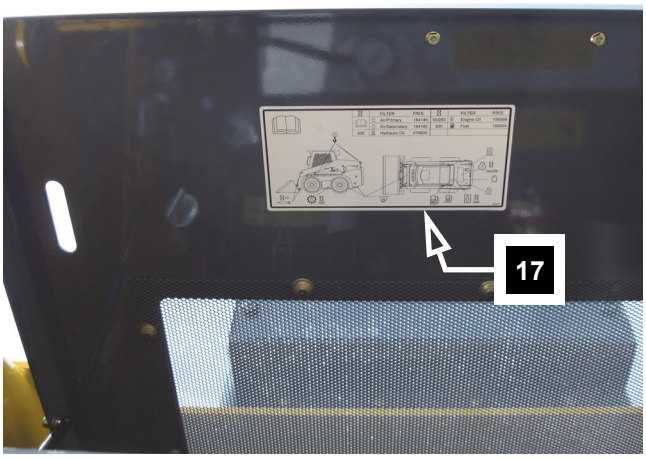
17

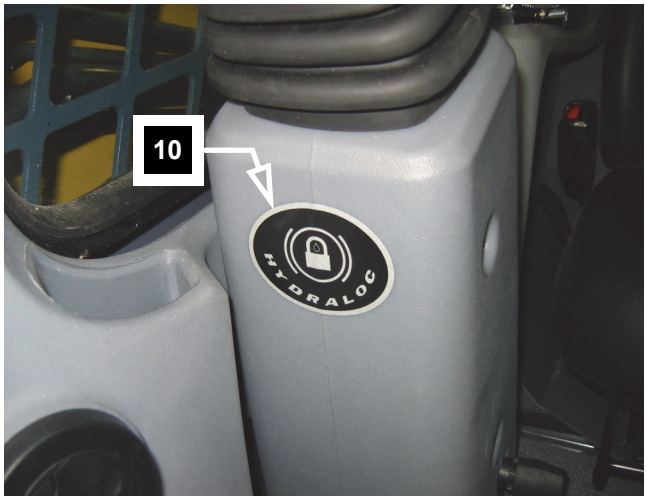
10
HYDRALOC

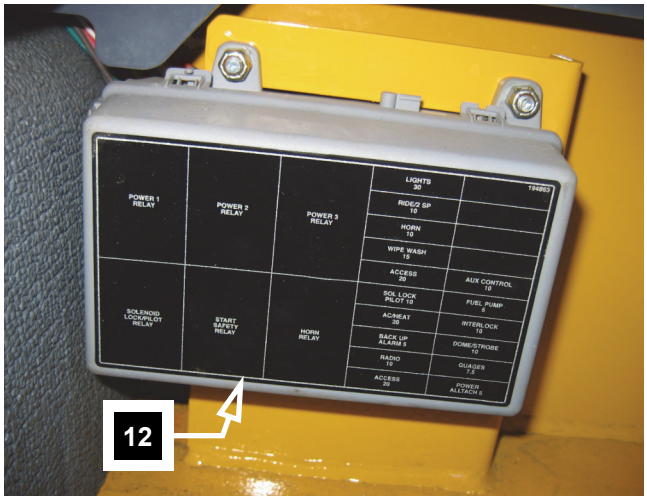
POWER 1 RELAY
POWER 2 RELAY
POWER 3 RELAY
LIGHTS 30
RIDE/2 SP 10
HORN 10
WIPE WASH 15
ACCESS 20
AUX CONTROL 10
SOL LOCK PILOT 10
FUEL PUMP 5
ACM/FAT 20
INTERLOCK 10
BACK UP ALARM 5
DOME/STROBE 7.5
RADIO 10
GUAGES 7.5
ACCESS 20
POWER ALLTACH 5
SOLENOID LOCKPILOT RELAY
START SAFETY RELAY
HORN RELAY
12

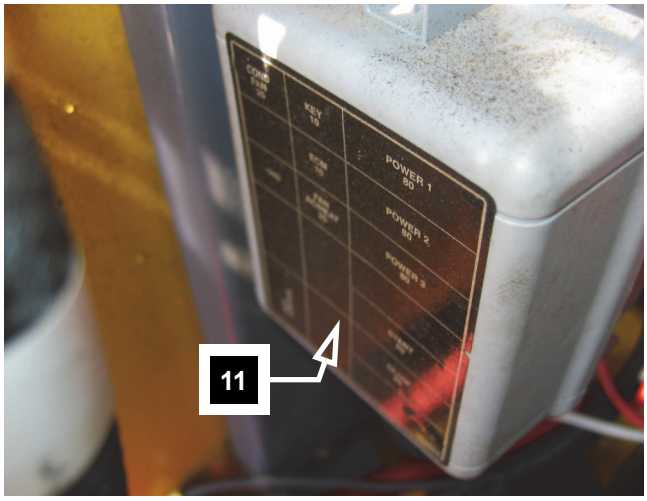
KEY 10
POWER 1 80
POWER 2 80
POWER 3 80
11

WARNING
AVOID INJURY OR DEATH
27
20
DANGER

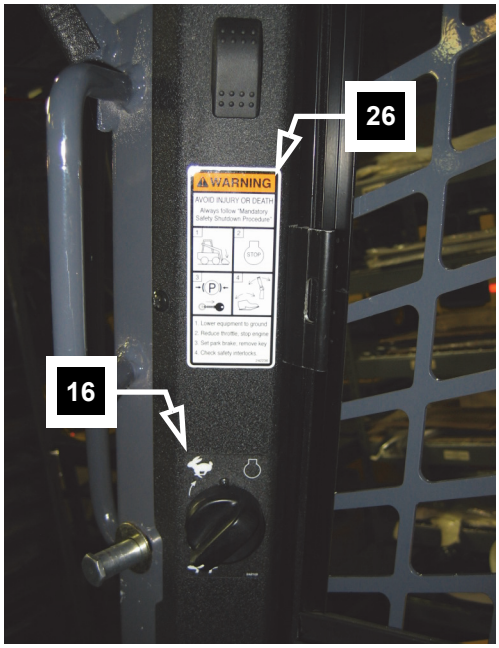
26
WARNING
AVOID INJURY OR DEATH
16

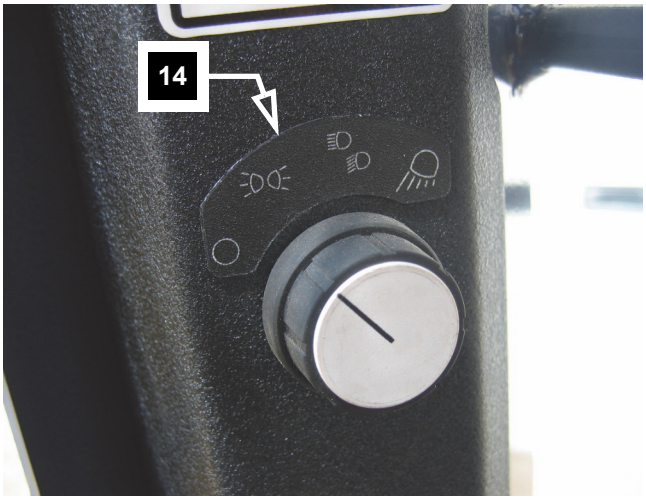
14

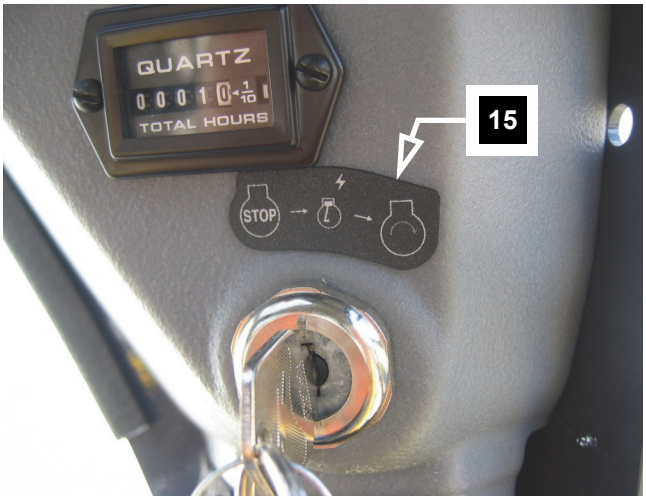
QUARTZ
TOTAL HOURS
STOP
15

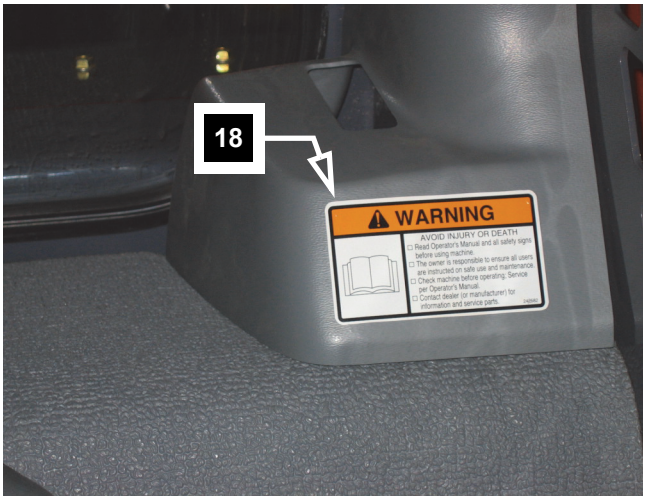
18
WARNING
AVOID INJURY OR DEATH

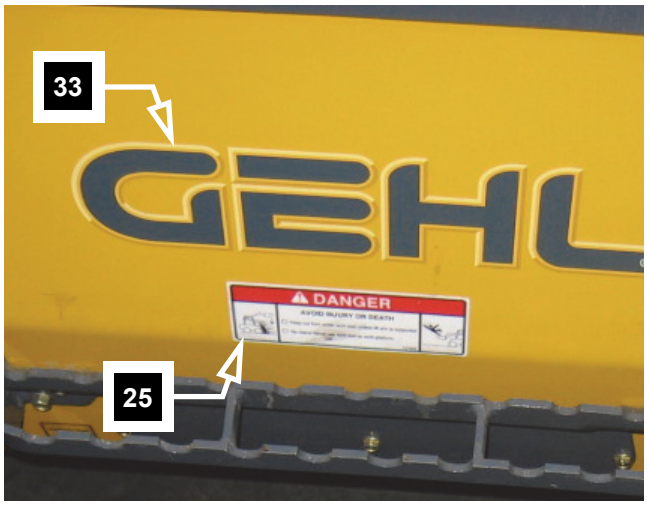
33
GEHL
DANGER
25

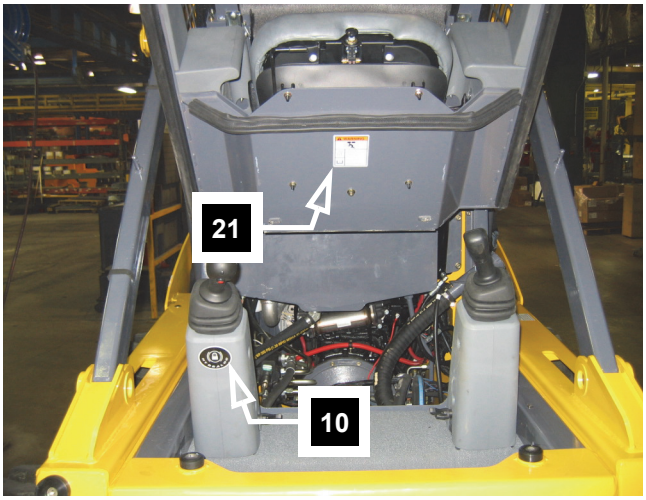
21
10

GEHL
34

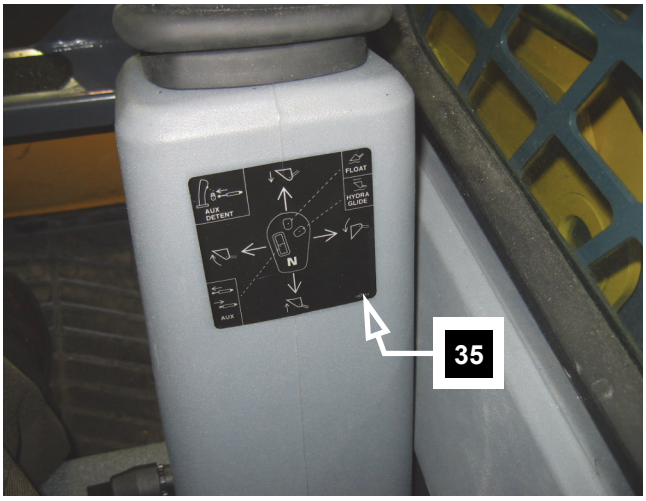
FLOAT
HYDRA GLIDE
AUX DETENT
N
AUX
35

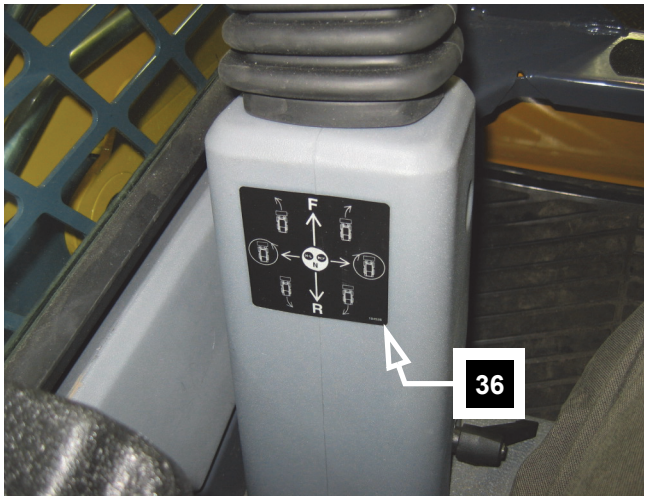
F
R
36

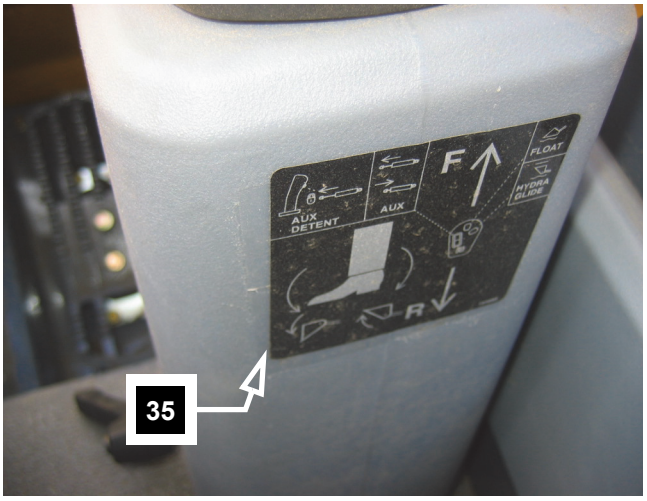
AUX DETENT
AUX
F
R
FLOAT
HYDRA GLIDE
35

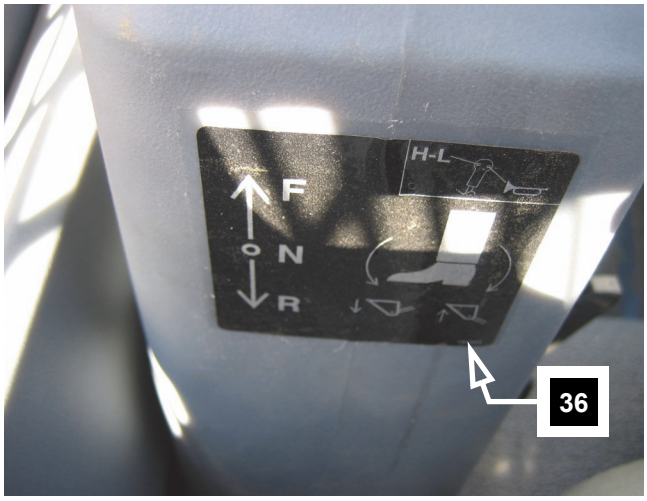
H-L
F
N
R
36

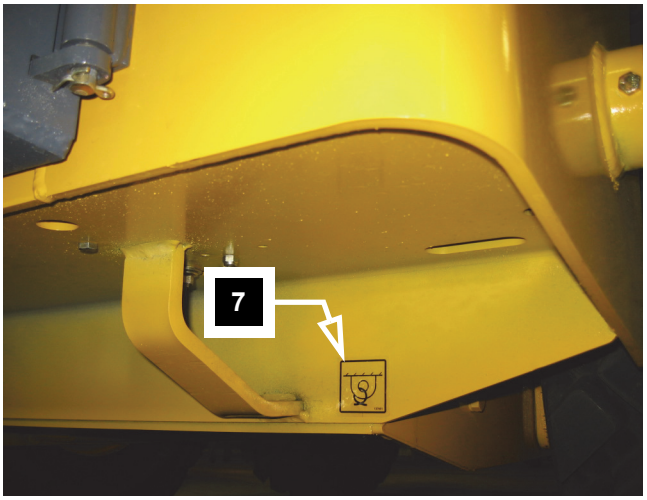
7

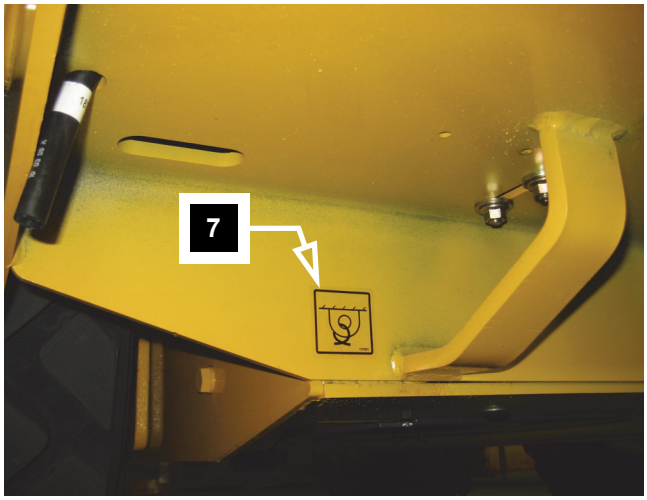
7

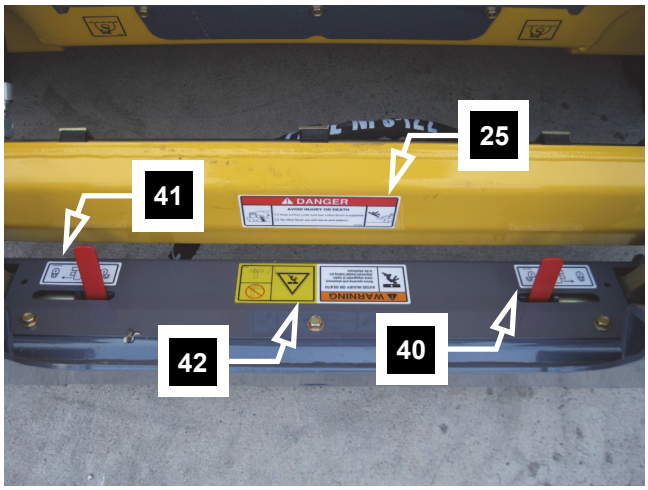
25
41
DANGER
WARNING
42
40

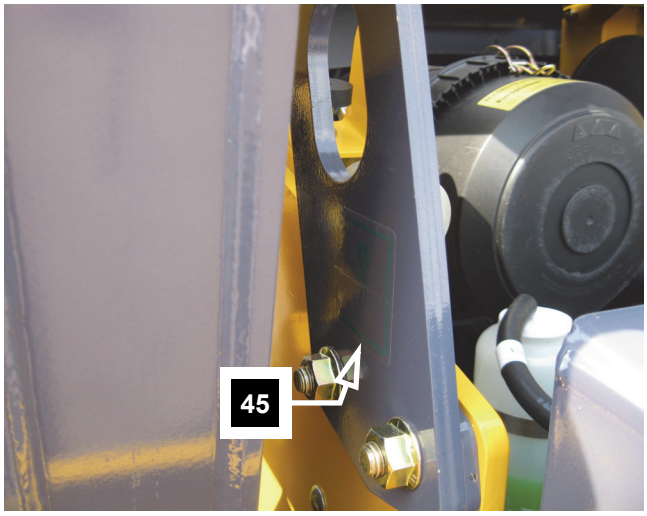
45

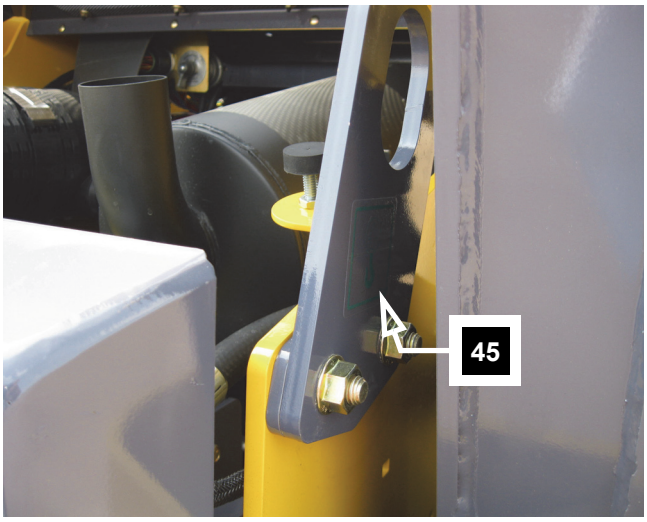
45

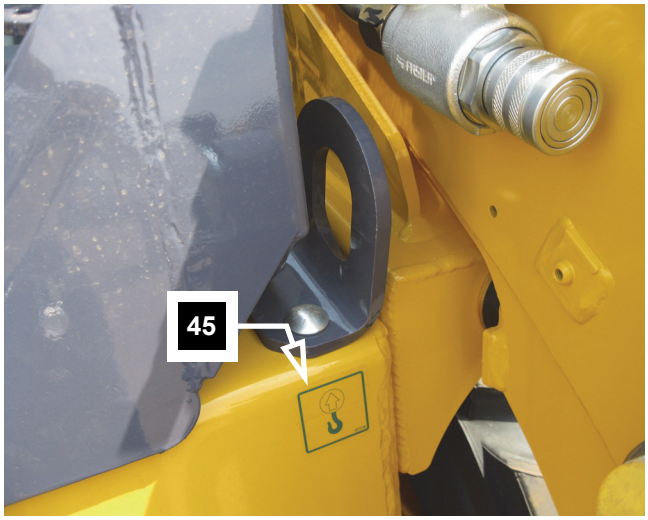
45

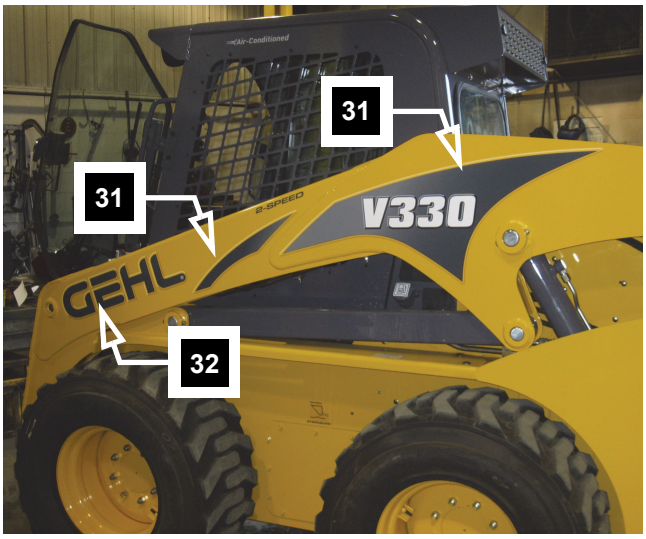
31
31
V330
GEHL
32

45
High-Flow

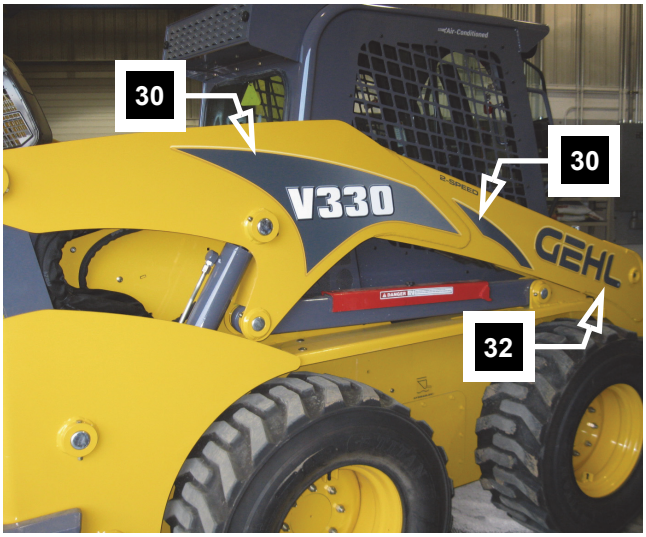
30
30
V330
GEHL
32

SECTION B: HYDRAULIC COMPONENTS AND HEATER/HVAC HOUSINGS

Lift Cylinder 125
Tilt Cylinder 127
Drive Motors with Parking Brake. 129
Tandem Pumps 133
Gear Pumps - Single and Double 139
Self-Leveling Valve 145
Solenoid Valves - Brake, Joystick Supply and Brake Release 147
Main Control Valves 149
Proportional Valves - Three and Five Bank 151
Hydraglide™ Ride Control Manifold Valve. 153
Condensor, Heater Housing and HVAC Housing Assembly 155
Lift Assist Pump and Cylinder 159
Pump - Power-A-Tach® 161
Foot Valve 162

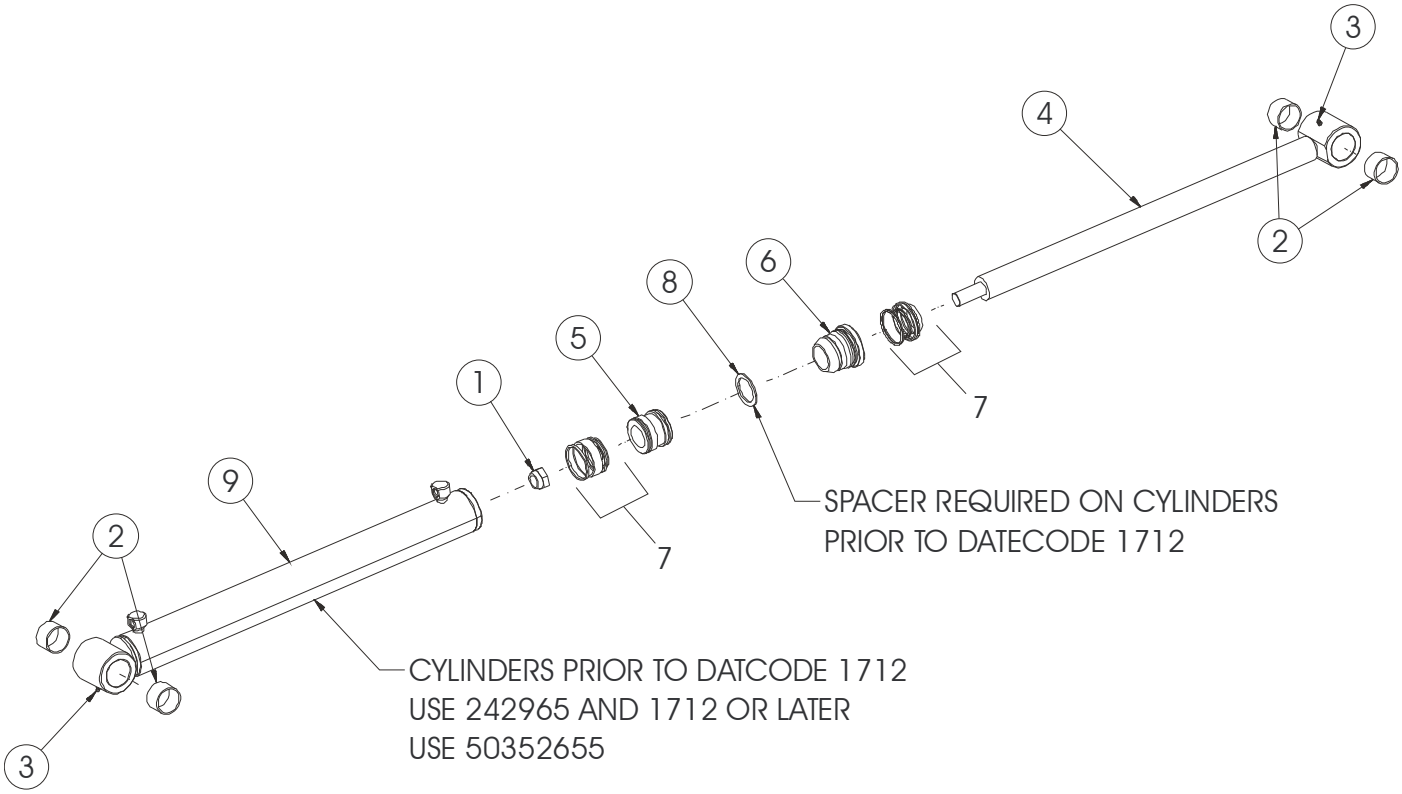
3
4
2
6
8
5
1
7
9
2
7
SPACER REQUIRED ON CYLINDERS
PRIOR TO DATECODE 1712
CYLINDERS PRIOR TO DATCODE 1712
USE 242965 AND 1712 OR LATER
USE 50352655
3

192266

Ref. No.	Part No.	Description	Quantity
	192266	CYLINDER/LIFT	
1	L500668	NUT/LOCK 1.125	1
2	183423	BUSHING/COMPOSITE 2.00	4
3	198178	ZERK/STRAIGHT SELF-TAPPING 1/4-28	2
4	242964	CYLINDER ROD/2.00	1
5	243203	PISTON	1
6	243204	HEAD GLAND	1
7	243205	KIT/SEAL	1
8	50352642 a	SPACER/CYLINDER	1
9	50352655 b	TUBE/CYLINDER/3.00	1
	242965 a	TUBE/CYLINDER/3.00	1

a) Part numbers for cylinders with a stamped date code prior to 1712.
b) Part number for cylinders with a stamped date code of 1712 and Up.

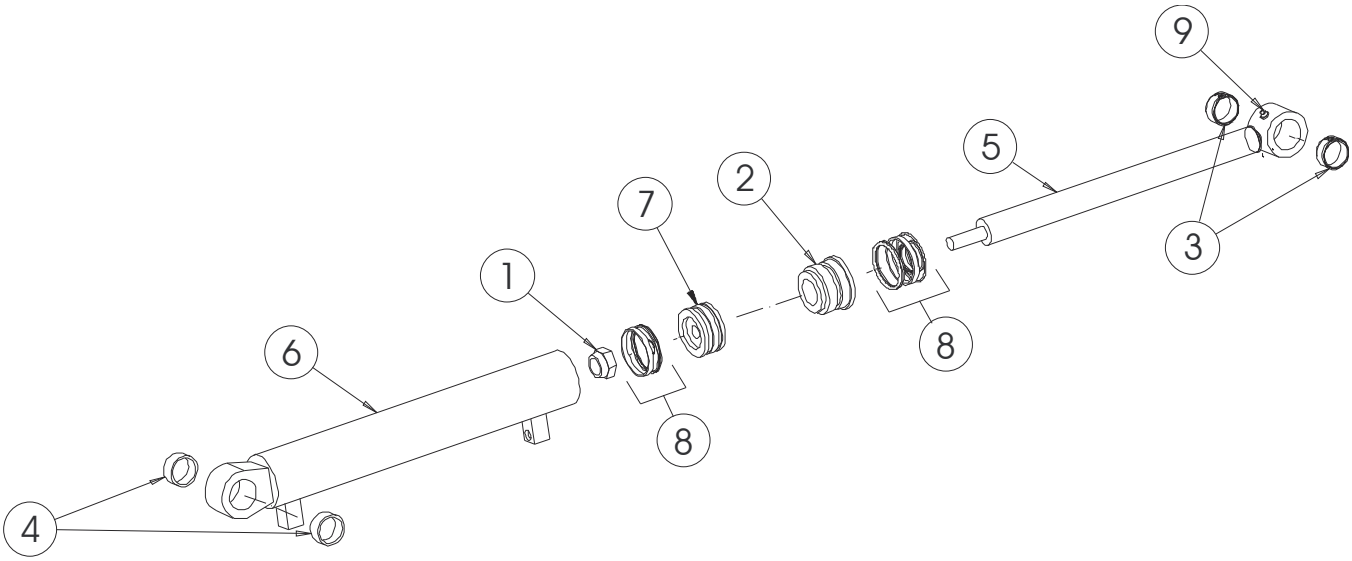

193299

Ref. No.	Part No.	Description	Quantity
	193299	CYLINDER/TILT	
1	L500668	NUT/LOCK 1.125	1
2	124072	GLAND/TILT CYLINDER	1
3	131488	BUSHING 1.75/1.50/.75	2
4	183453	COMPOSITE/BUSHING	2
5	193297	ROD/TILT CYLINDER	1
6	193298	TUBE/TILT CYLINDER	1
7	243199	PISTON	1
8	243200	KIT/SEAL	1
9	198178	ZERK/STRAIGHT SELF-TAPPING 1/4-28	1

Single-Speed

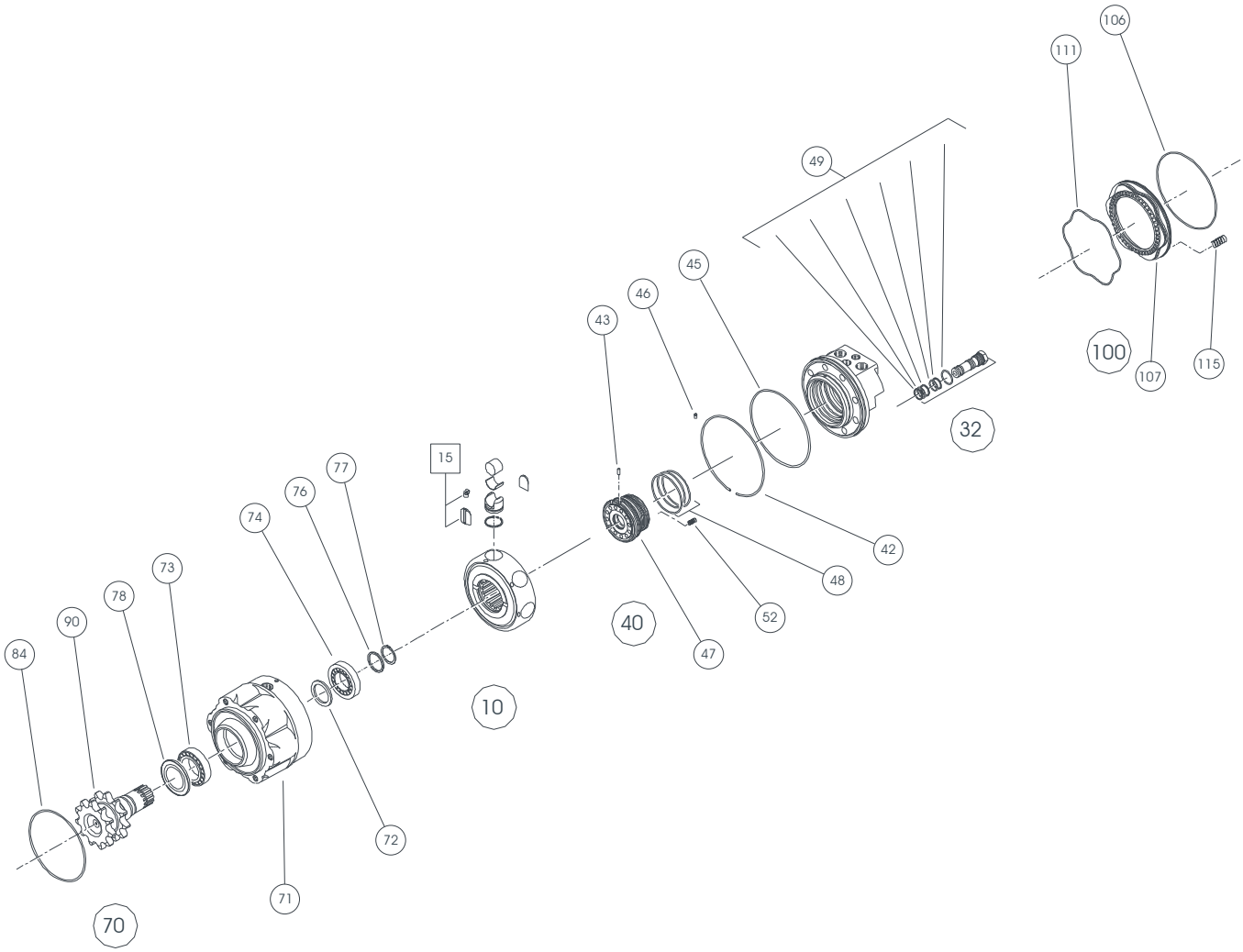

195101_195102

Ref. No.	Part No.	Description	Quantity Single-Speed
	195101	MOTOR/SINGLE SPEED RIGHT	1
	195102	MOTOR/SINGLE SPEED LEFT	1
10	194233	ASSEMBLY/CYLINDER BLOCK	1
15	194234	KIT/PISTON REPAIR	1
40	195691	ASSEMBLY/VALVING W/DISTR	1
42	184986	WASHER/SPRING	1
43	194236	PIN/DOWEL	1
45	184987	O-RING	1
46	194237	PIN/DOWEL	1
47	195692	VALVING (INCLUDES ITEMS 47, 48 AND 52)	1
48	186026	KIT/SEAL	1
52	132621	SPRING	6
32	184991	VALVING/SHUTTLE	1
49	184992	KIT/SEAL	1
70	194252	ASSEMBLY/BEARING SUPPORT #100-14	1
71	186022	SUPPORT/BEARING	1
72	194244	KIT/BEARING (INCLUDES ITEMS 72, 73, 74, 76, 77 AND 78)	1
73	NSS	BEARING/ROLLER	1
74	NSS	BEARING/ROLLER	1
76	NSS	RING/THRUST	1
77	NSS	RING/SNAP	1
78	NSS	RING/SEAL	1
84	NSS	O-RING	1
90	194253	SHAFT #100-14 SPROCKETS	1
100	194247	ASSEMBLY/BRAKE	1
106	194250	O-RING/BRAKE PISTON	1
107	194249	PISTON/BRAKE	1
111	186016	O-RING	1
115	194248	SPRING/BRAKE	8
150	195693	KIT/SEAL COMPLETE	1

Two-Speed

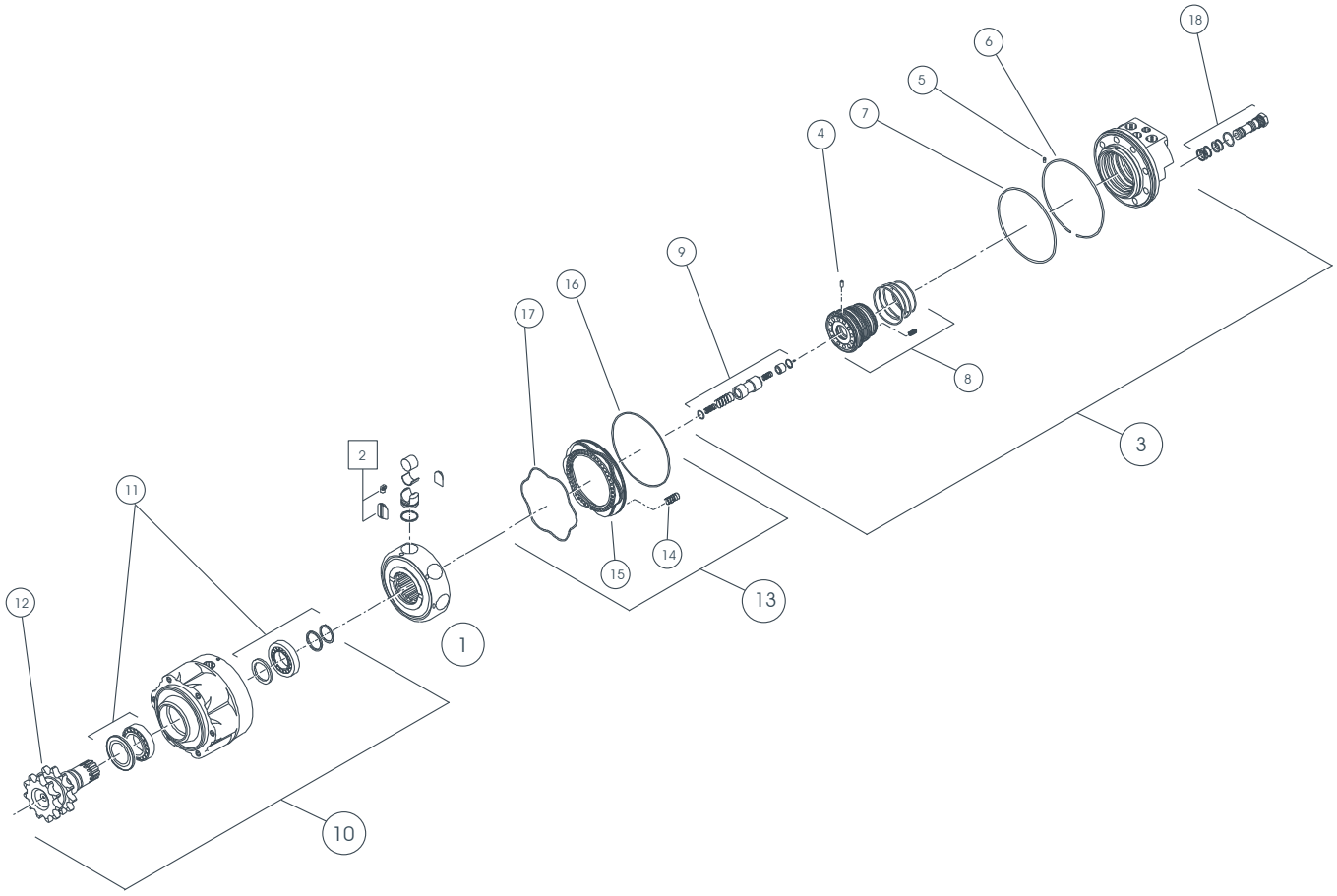

193674_193675

Ref. No.	Part No.	Description	Quantity Two-Speed
	193674	MOTOR/TWO-SPEED RIGHT	1
	193675	MOTOR/TWO-SPEED LEFT	1
1	194233	ASSEMBLY/CYLINDER BLOCK	1
2	194234	KIT/PISTON REPAIR	1
3	194235	ASSEMBLY/VALVING COVER	1
4	194236	PIN/DOWEL	1
5	194237	PIN/DOWEL	1
6	184986	WASHER/SPRING	1
7	184987	O-RING	1
8	194238	ASSEMBLY/VALVING	1
9	194239	ASSEMBLY/TWO-SPEED SPOOL	1
10	194252	ASSEMBLY/BEARING SUPPORT #100-14	1
11	194244	KIT/BEARING	1
12	194253	SHAFT #100-14 SPROCKETS	1
13	194247	ASSEMBLY/BRAKE	1
14	194248	SPRING/BRAKE	8
15	194249	PISTON/BRAKE	1
16	194250	O-RING/BRAKE PISTON	1
17	186016	O-RING	1
18	184991	VALVING/SHUTTLE	1
	184992	KIT/SEAL	1
REF	194251	KIT/SEAL COMPLETE	1

Pump 50351006

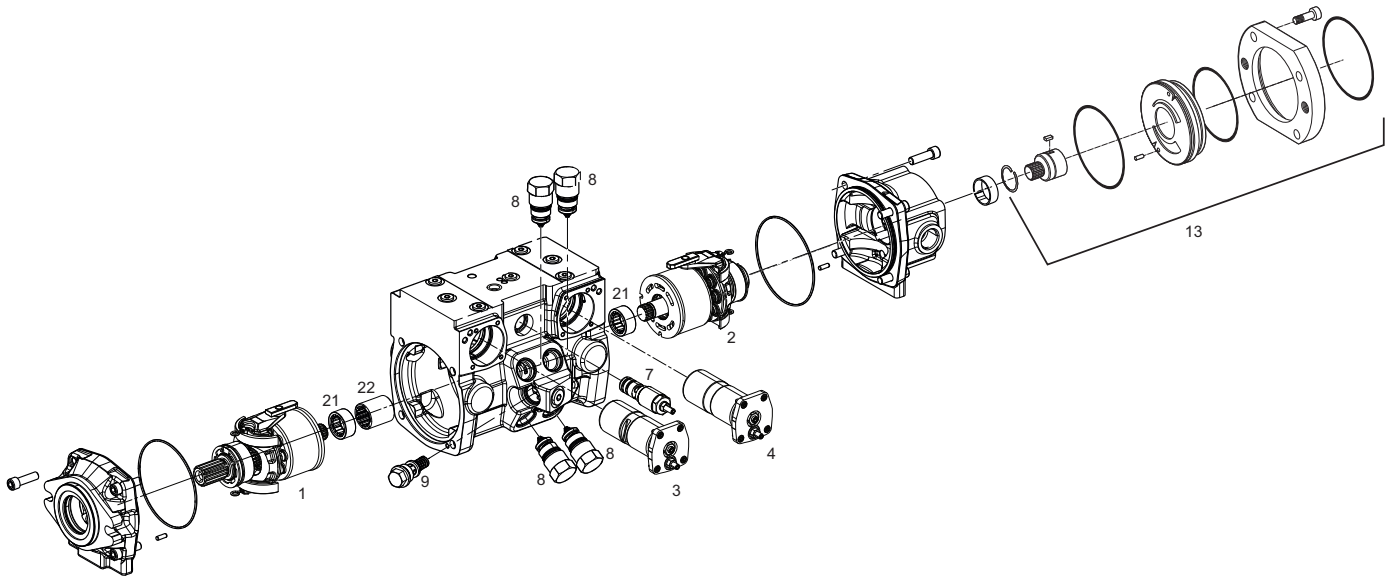

Pump 245149 and 241978

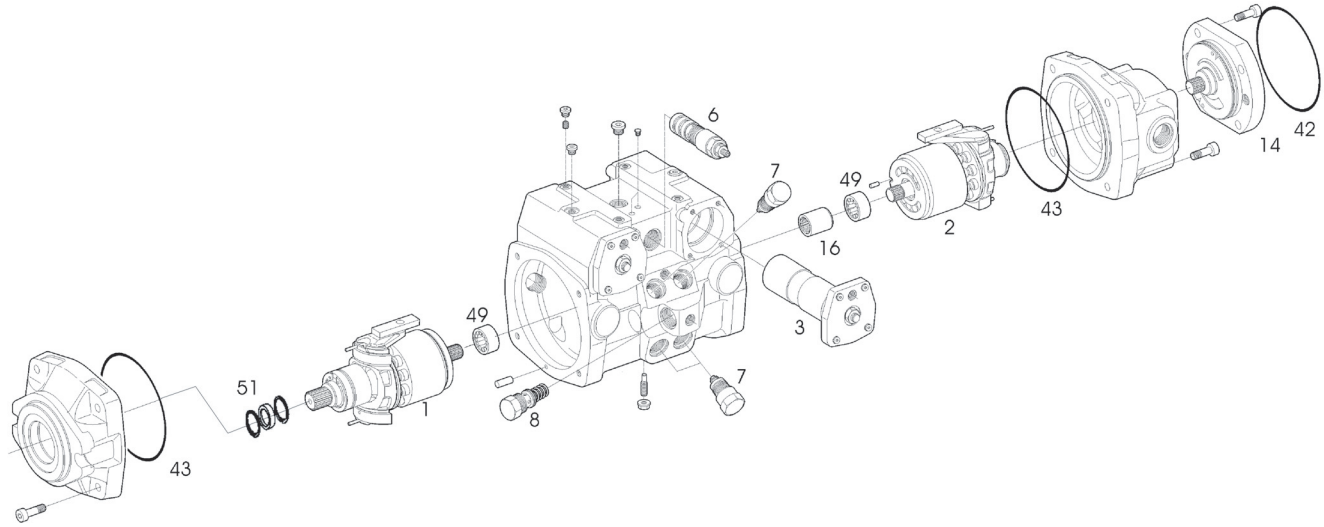

241978_245149_50351006

Ref. No.	Part No.	Description	Quantity Pump
	50351006 c	PUMP/TANDEM A22	1
1	50353716	GROUP/ROTARY	1
2	50353717	GROUP/ROTARY	1
3	50353721	CONTROL/HYDRAULIC	1
4	50353721	CONTROL/HYDRAULIC	1
7	50353722	CARTRIDGE/CONTROL	1
8	50353718	VALVE/PRESSURE RELIEF	4
9	50353719	VALVE/CHARGE PRESSURE RELIEF	1
13	191712	PUMP/GEAR/INTERNAL	1
21	191714	BEARING/PLAIN ROLLER	2
22	50353723	COUPLER	1
23	50353724	KIT/SEAL (NOT SHOWN)	1

c) V270 Models: SN 022220 and Up. V330 Models: SN 131625 and Up.

Ref. No.	Part No.	Description	Quantity Pump
	245149 b	PUMP/TANDEM	1
	241978 a	PUMP/TANDEM	1
1	198170	ROTARY GROUP/RIGHT ROTATION	1
2	198171	ROTARY GROUP/LEFT ROTATION	1
3	198172	CONTROL/HYDRAULIC	2
6	191709	CARTRIDGE/CONTROL W/ ORIFICE ADJUSTED	1
7	198175	VALVE/PRESSURE RELIEF/HIGH PRESSURE	4
8	191711	VALVE/PRESSURE RELIEF/CHARGE	1
14	191712	PUMP/GEAR/INTERNAL	1
16	191713	COUPLING/THROUGH DRIVE	1
42	NSS	O-RING	1
43	NSS	O-RING	2
49	191714	BEARING/PLAIN ROLLER	2
51	191718	RING/SHAFT SEAL	1
	191722	KIT/SEAL (INCLUDES ITEMS 42, 43, AND 51)	1

a) V270 Models: SN 021408 and Before (see exemptions in note b)
b) V270 Models: SN 021409-022219, plus earlier SN's: 021358/021369/021370/021371/021372/021378/021379/021380/021381/021385/021386/021388/021389/021390/021391/021392/021393/021394/021395/021396/021401/021402/021404/021405. V330 Models: SN 131624 and Before.

Pump 50351006 / 50353716 Engine End

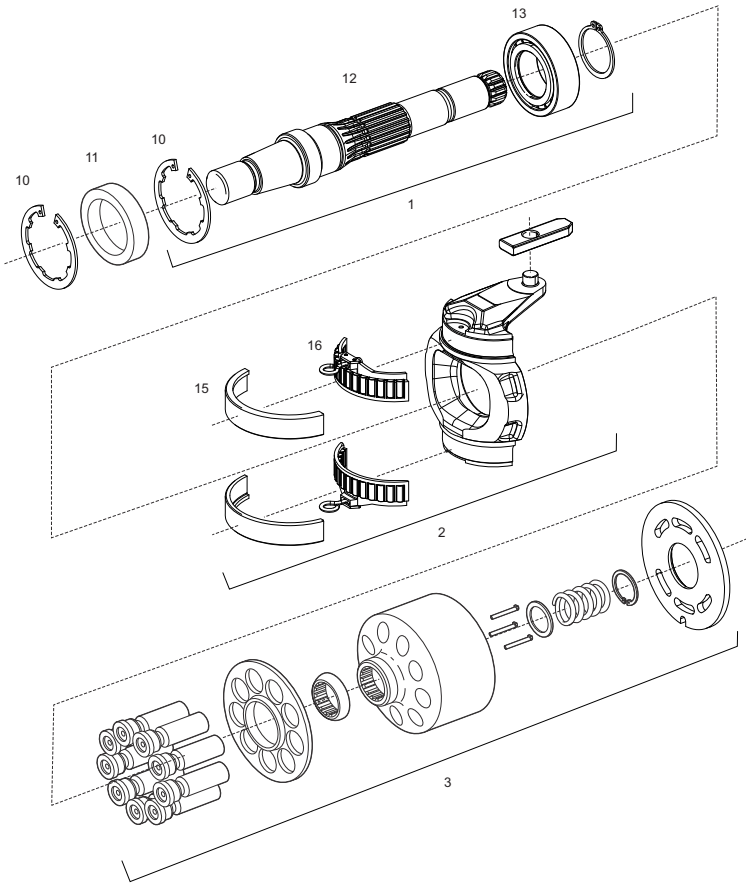

Pump 50351006 / 50353717 Gear Pump End

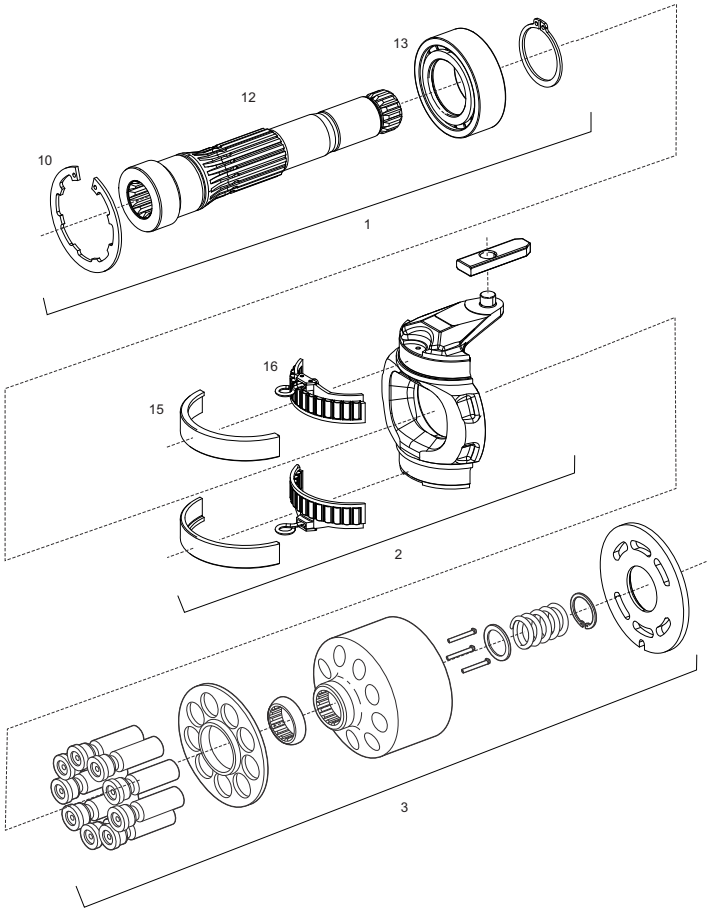

241978_245149_50351006

Ref. No.	Part No.	Description	Quantity Engine End
	50353716	GROUP/ROTARY	1
1	50353731	SHAFT/DRIVE ASSY	1
2	50353730	ASSY/CRADLE	1
3	50353725	GROUP/ROTARY RIGHT	1
10	191717	SEEGER-V-RING	2
11	191718	RING/SHAFT SEAL	1
12	191716	SHAFT/DRIVE RIGHT ROTATION	1
13	50353727	BEARING	1
15	50353729	LINER/BEARING	2
16	50353728	BEARING/CRADLE	2

Ref. No.	Part No.	Description	Quantity Pump End
	50353717	GROUP/ROTARY	1
1	50353732	SHAFT/DRIVE ASSY	1
2	50353730	ASSY/CRADLE	1
3	50353726	GROUP/ROTARY LEFT	1
10	191717	SEEGER-V-RING	1
12	191720	SHAFT/DRIVE LEFT ROTATION	1
13	50353727	BEARING	1
15	50353729	LINER/BEARING	2
16	50353728	BEARING/CRADLE	2

Pump 245149 and 241978 / Engine End 198170

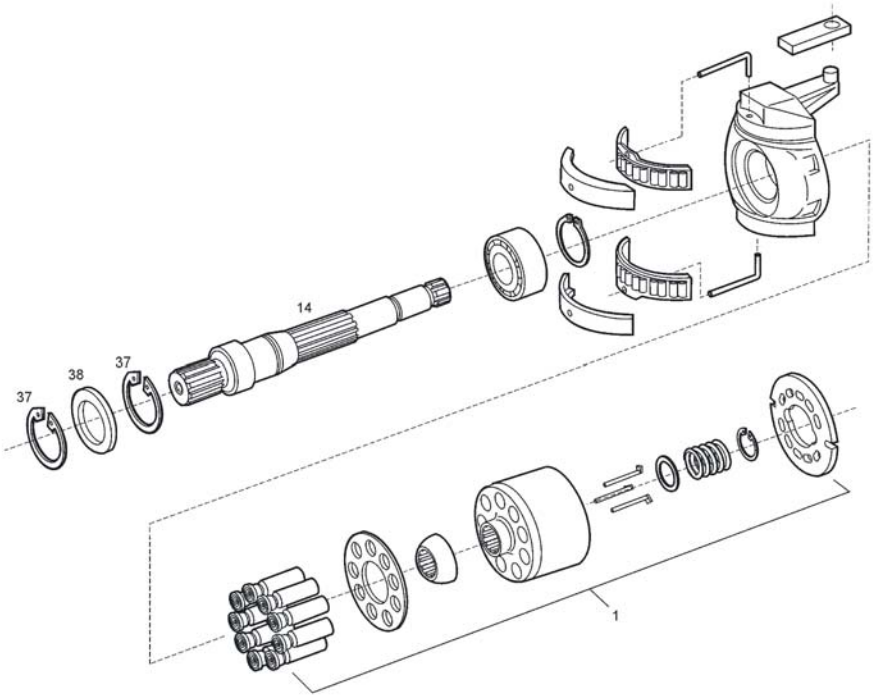

Pump 245149 and 241978 / Gear Pump End 198171

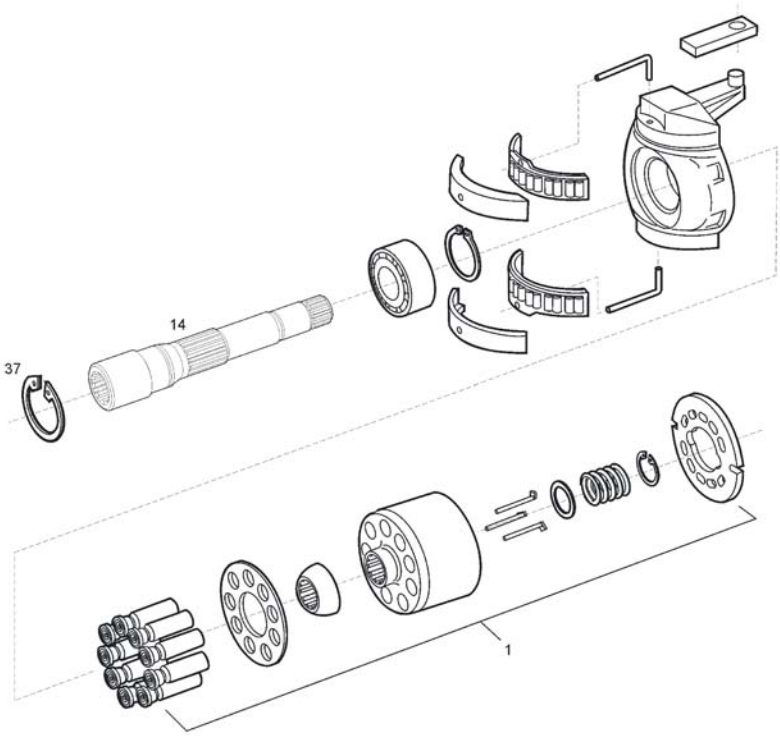

198170-198171

Ref. No.	Part No.	Description	Quantity 198170 Engine End
	198170	ROTARY GROUP/RIGHT ROTATION	1
1	198173	ROTARY GROUP/RIGHT ROTATION/SUB	1
14	191716	DRIVE SHAFT/RIGHT ROTATION	1
37	191717	SEEGER-V-RING	2
38	191718	RING/SHAFT SEAL	1

Ref. No.	Part No.	Description	Quantity 198171 Pump End
	198171	ROTARY GROUP/LEFT ROTATION	1
1	198174	ROTARY GROUP/LEFT ROTATION/SUB	1
14	191720	DRIVE SHAFT/LEFT ROTATION	1
37	191717	SEEGER-V-RING	1

Standard Auxiliary - 135930 Gear Pump

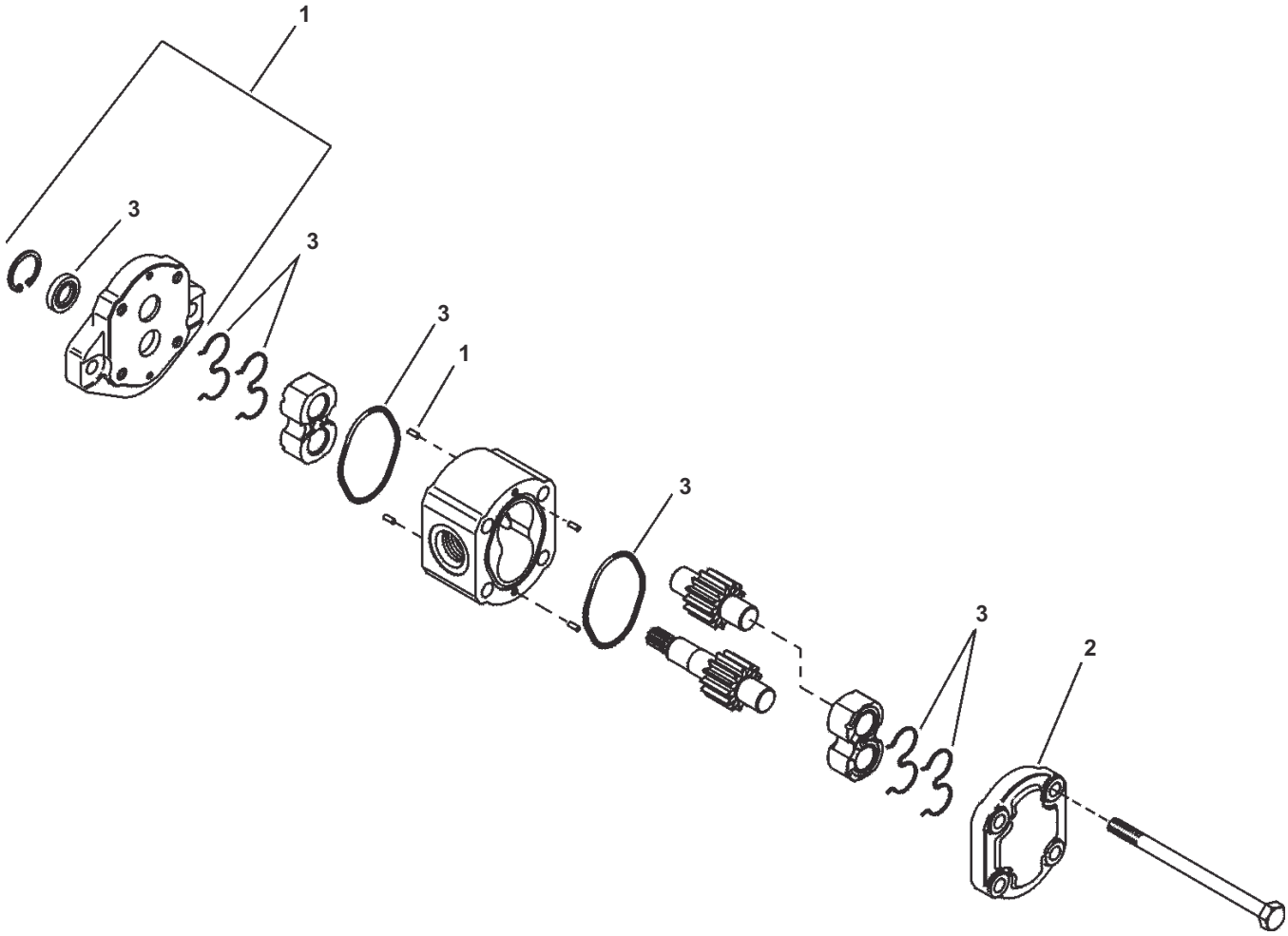

135930

Ref. No.	Part No.	Description	Quantity
	135930	PUMP/GEAR SINGLE 2.01	1
1	132546	KIT/FLANGE - CONSISTS OF:	1
	NSS	FLANGE	1
	NSS	SEAL/SHAFT	1
	NSS	RING/SNAP	1
	NSS	PIN/DOWEL	2
2	132547	ENDCOVER	1
3	132541	KIT/SEAL - CONSISTS OF:	1
	NSS	SEAL/SHAFT	1
	NSS	RING/BACKUP	2
	NSS	E-SEAL	2
	NSS	O-RING	2

High-Flow Auxiliary - 274666 Gear Pump
V270 Models: SN 021601 and Up
V330 Models

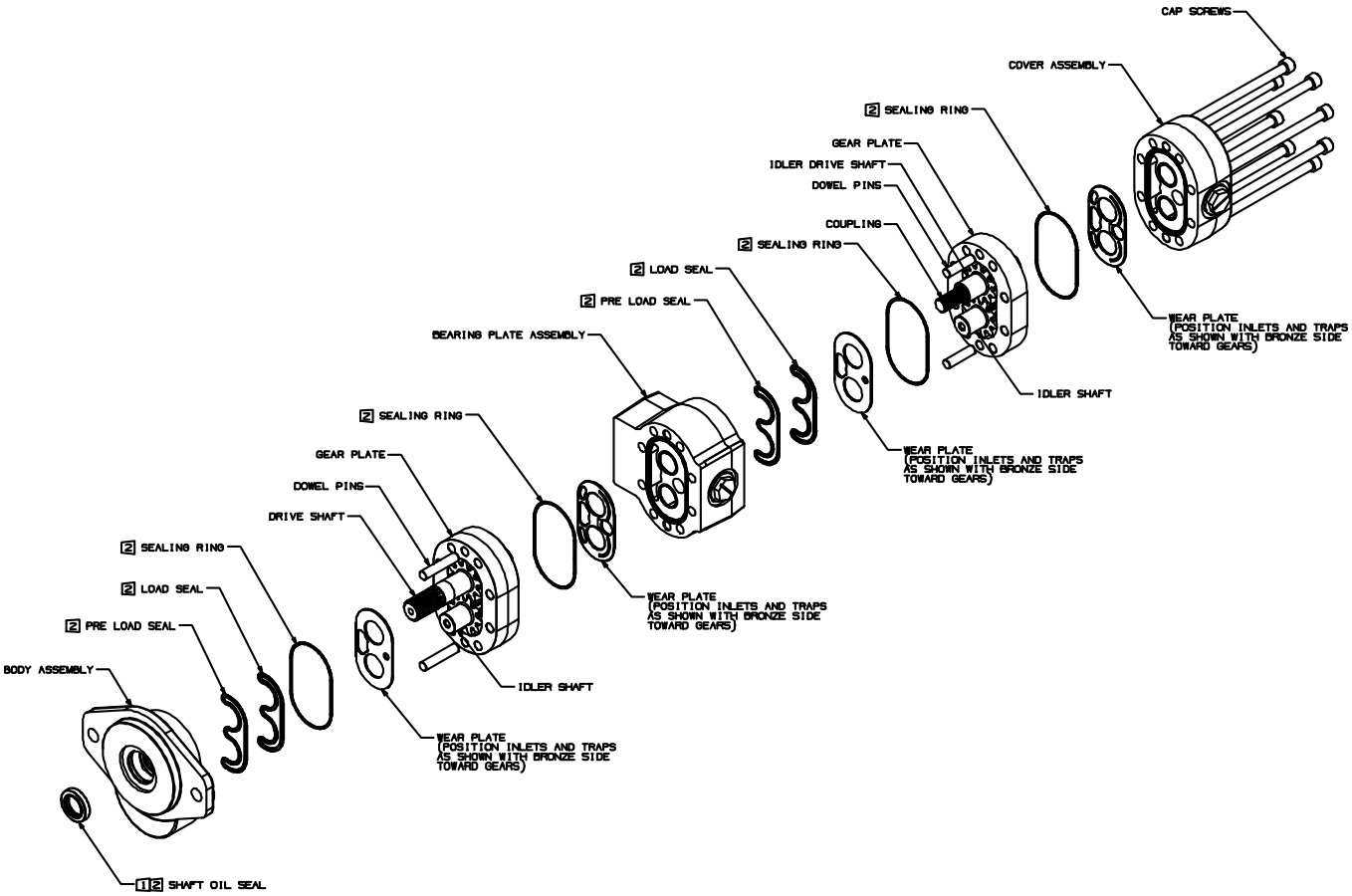

274666

Ref. No.	Part No.	Description	Quantity High-Flow
	274666 a	PUMP/GEAR DOUBLE 1.94/1.37	1
1	50280056	KIT/SEAL	1
2	50280057	KIT/SEAL	1

a) V270 Models: SN 021601 and Up. All V330 Models.

High-Flow Auxiliary - 190597 Gear Pump
V270 Models: SN 021600 and Before

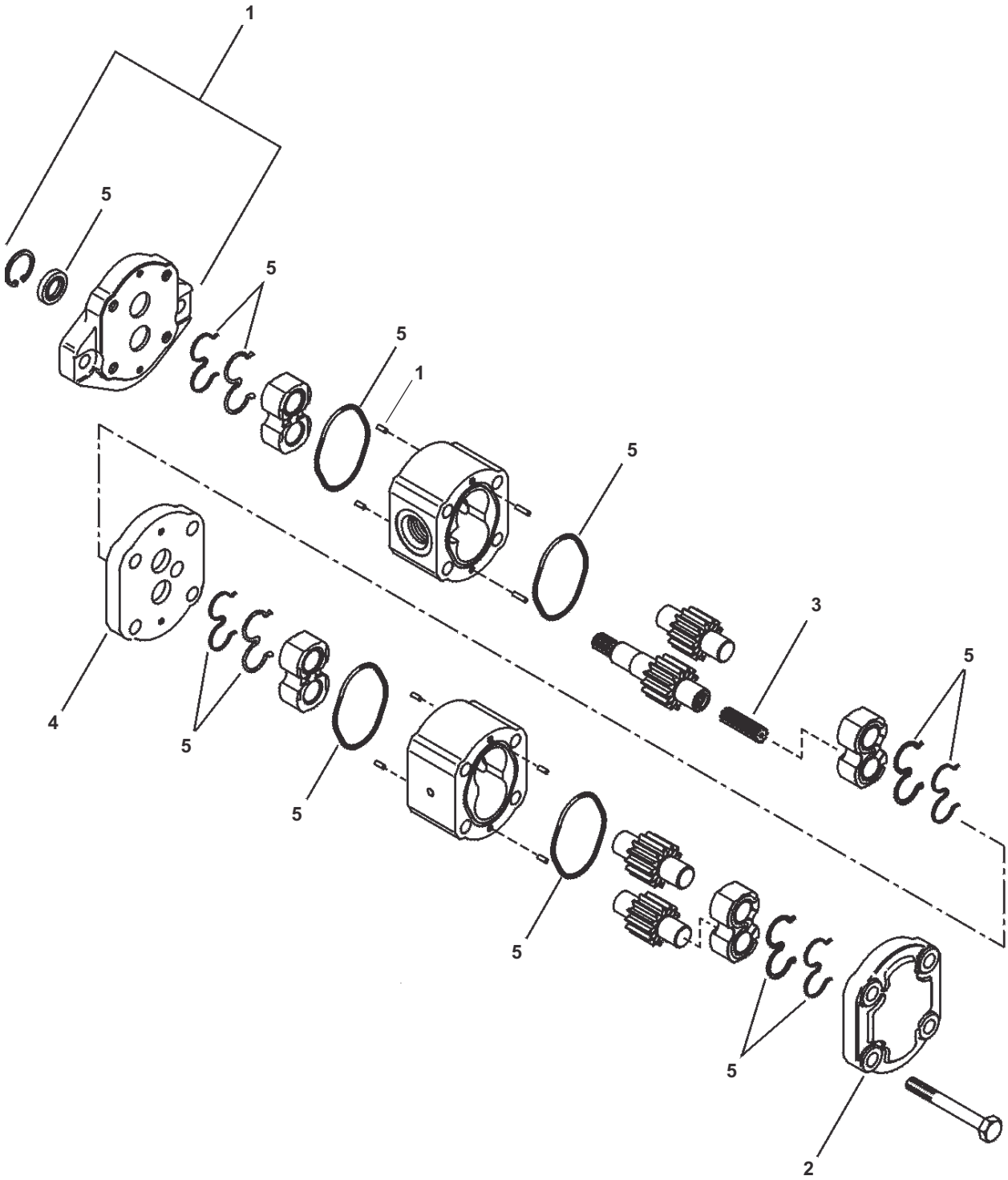

190597

Ref. No.	Part No.	Description	Quantity High-Flow
	190597 a	PUMP/GEAR DOUBLE 2.01/1.40	1
1	132546	KIT/FLANGE - CONSISTS OF:	1
	NSS	FLANGE	1
	NSS	SEAL/SHAFT	1
	NSS	RING/SNAP	1
	NSS	PIN/DOWEL	2
2	132547	END COVER	1
3	132554	COUPLING	1
4	132555	PLATE/DISTANCE	1
5	132542	KIT/SEAL - CONSISTS OF:	1
	NSS	SEAL/SHAFT	1
	NSS	RING/BACKUP	4
	NSS	E-SEAL	4
	NSS	O-RING	4

a) V270 Models: SN 021600 and Before

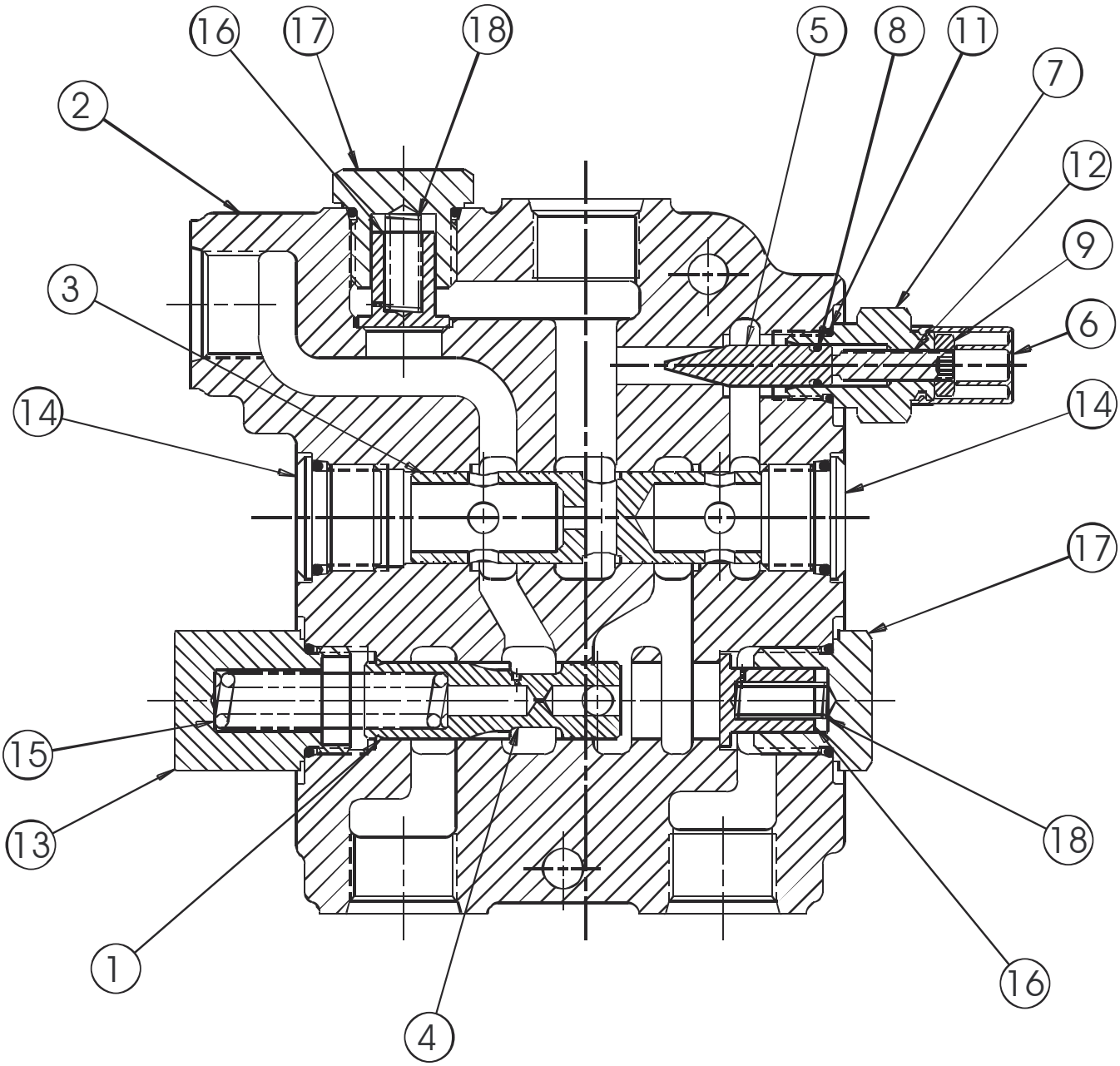

135367

Ref. No.	Part No.	Description	Quantity
	135367	VALVE/SELF-LEVELING	1
1	350-27299	RING/RETAINING	1
2	NSS	BODY	1
3	NSS	SPOOL	1
4	NSS	SPOOL	1
5	080808	PIN	1
6	a	COVER	1
7	080809	CAP/ADJUSTMENT	1
8	a	O-RING	1
9	080810	NUT	1
11	a	O-RING	1
12	080811	SCREW/SET	1
13	129004	ASSEMBLY/PLUG	1
14	080813	ASSEMBLY/PLUG	2
15	089961	SPRING	1
16	088473	CHECK/LOAD	2
17	088472	ASSEMBLY/PLUG	2
18	088471	SPRING	2
	129066	KIT/SEAL (Includes Items #6, #8 and #11)	1

a) Items part of the Seal Kit - 129066

Single-Speed - 240056 **Two-Speed - 240057** **Joystick Supply - 50352381**

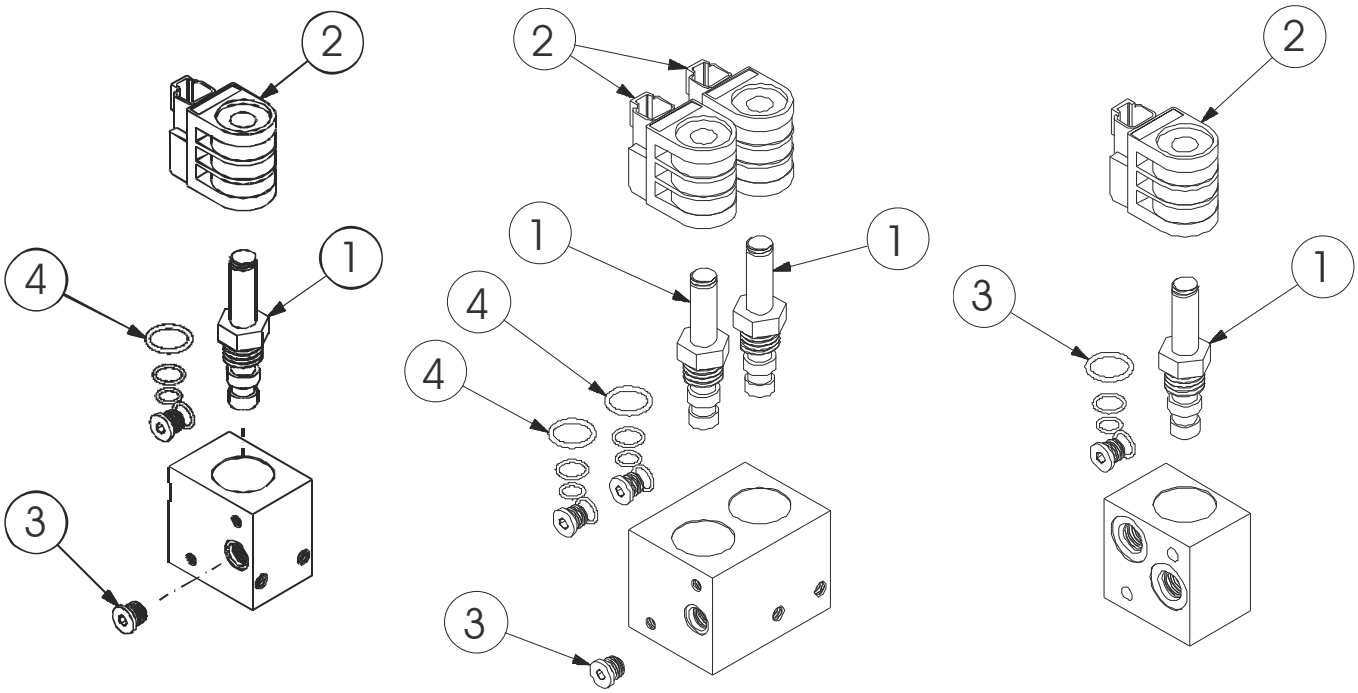

Brake Release Solenoid - 242517

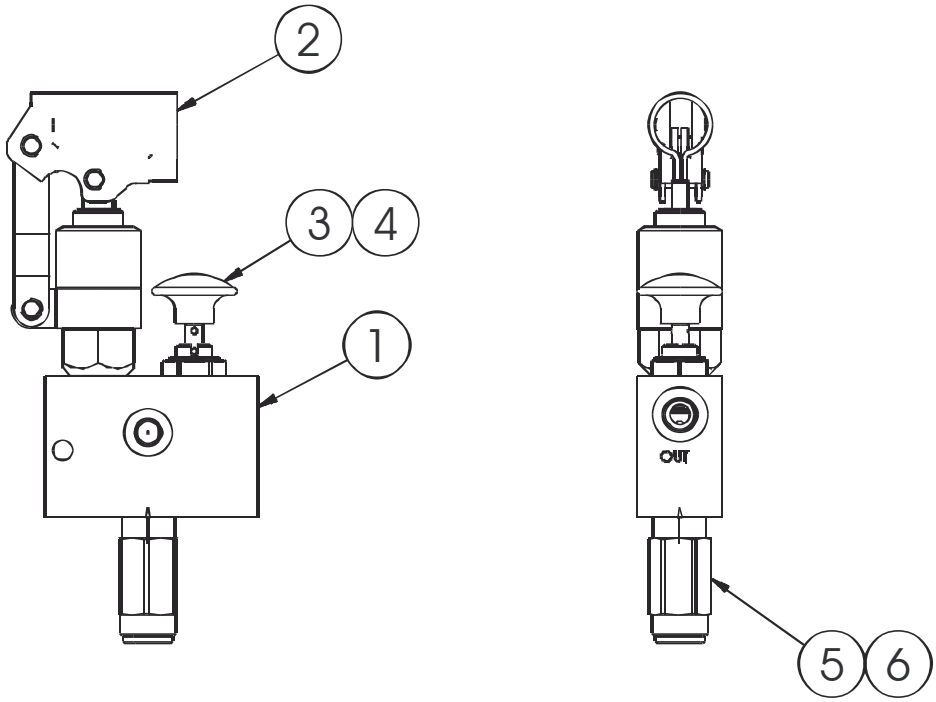

240056_240057_242517_240058

SOLENOID VALVES - BRAKE, JOYSTICK SUPPLY AND BRAKE RELEASE

Ref. No.	Part No.	Description	Quantity Single	Two	Joystick
	240056	VALVE/BRAKE	1	-	-
	240057	VALVE/BRAKE TWO-SPEED	-	1	-
	50352381	VALVE/JOYSTICK SUPPLY	-	-	1
1	50352380	CARTRIDGE	-	-	1
	243248	CARTRIDGE	1	2	-
2	243249	COIL	1	2	1
3	243250	PLUG	1	1	-
4	243263	KIT/SEAL	1	2	1
4	NSS	BODY	1	1	1

Ref. No.	Part No.	Description	Quantity Brake Release
	242517	VALVE/BRAKE RELEASE	1
1	198190	BODY/VALVE/BRAKE RELEASE	1
2	198191	HAND PUMP PUSH ACTUATE	1
3	198192	MANUAL PUSH-CLOSE PULL-OPEN	1
4	198193	SEAL KIT / 198192	1
5	198194	RELIEF/DIRECT ACTING POPPET	1
6	198195	SEAL KIT / 198194	1

Standard Control Valve 193103

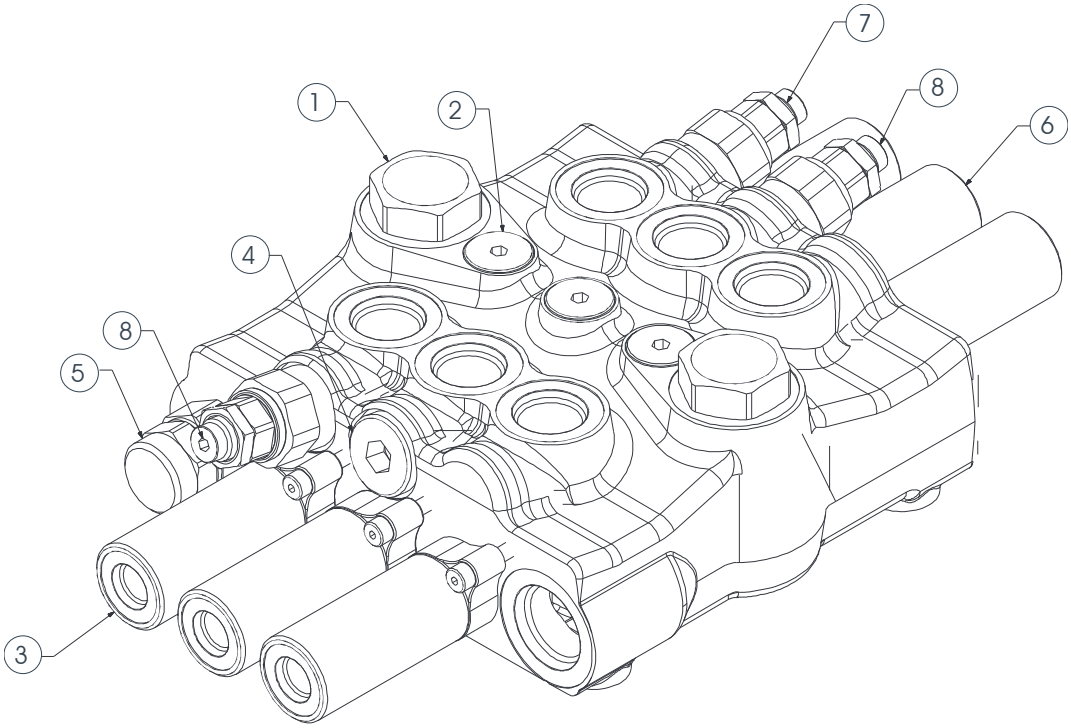

High-Flow Control Valve 193104

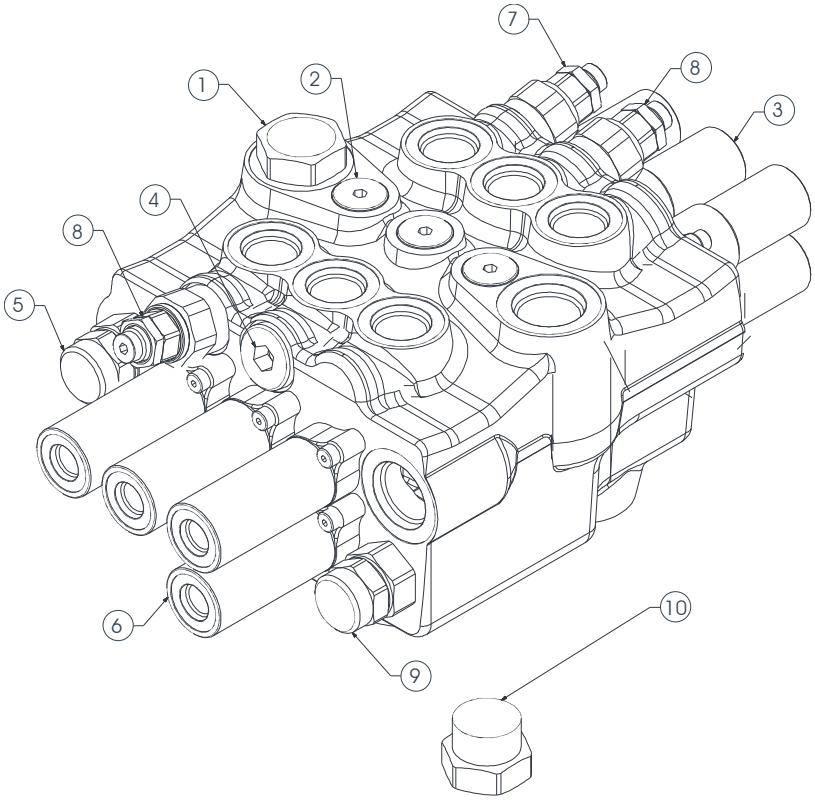

193103_193104

Ref. No.	Part No.	Description	Control Valves Standard 193103	Control Valves High-Flow 193104
1	103060	KIT/PLUG 1-1/16	2	1
2	240272	KIT/CHECK VALVE	3	3
3	240273	HYDRAULIC CONTROL/REAR	3	4
4	240274	KIT/PLUG	1	1
5	240275	VALVE/RELIEF MAIN AND AUXILIARY	1	1
6	240276	HYDRAULIC CONTROL/ANTERIOR	3	4
7	240277	VALVE/COMBINATED LIFT ARM DOWN	1	1
8	240278	VALVE/COMBINATED LIFT ARM UP	2	2
9	240282	VALVE/RELIEF PORT HIGH FLOW	-	1
10	103052	VALVE KIT/HIGH-FLOW CHECK	-	1
11	240279	KIT/GASKET STD (NOT SHOWN)	1	-
	240284	KIT/GASKET HF (NOT SHOWN)	-	1

3 Bank Valve - 244511

Standard Auxiliary

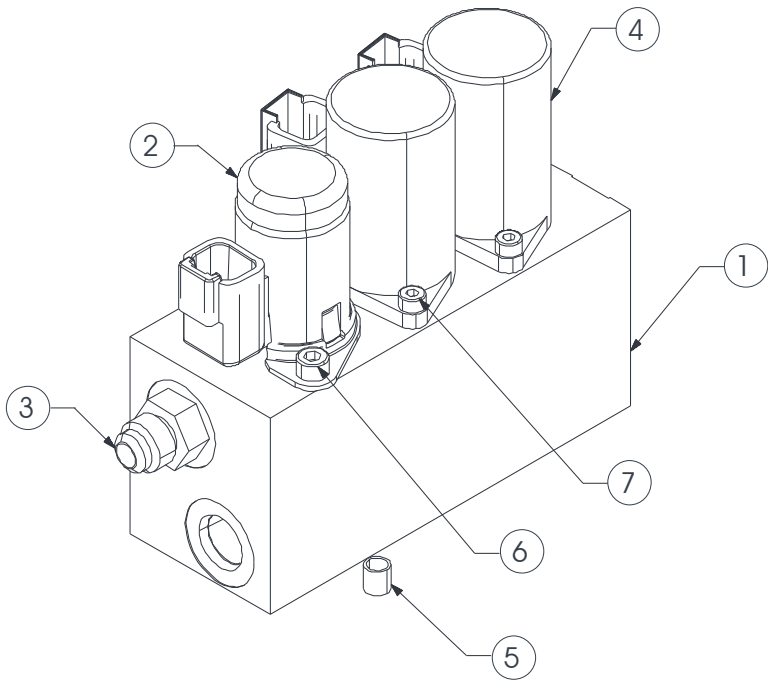

5 Bank Valve - 244513

High-Flow Auxiliary

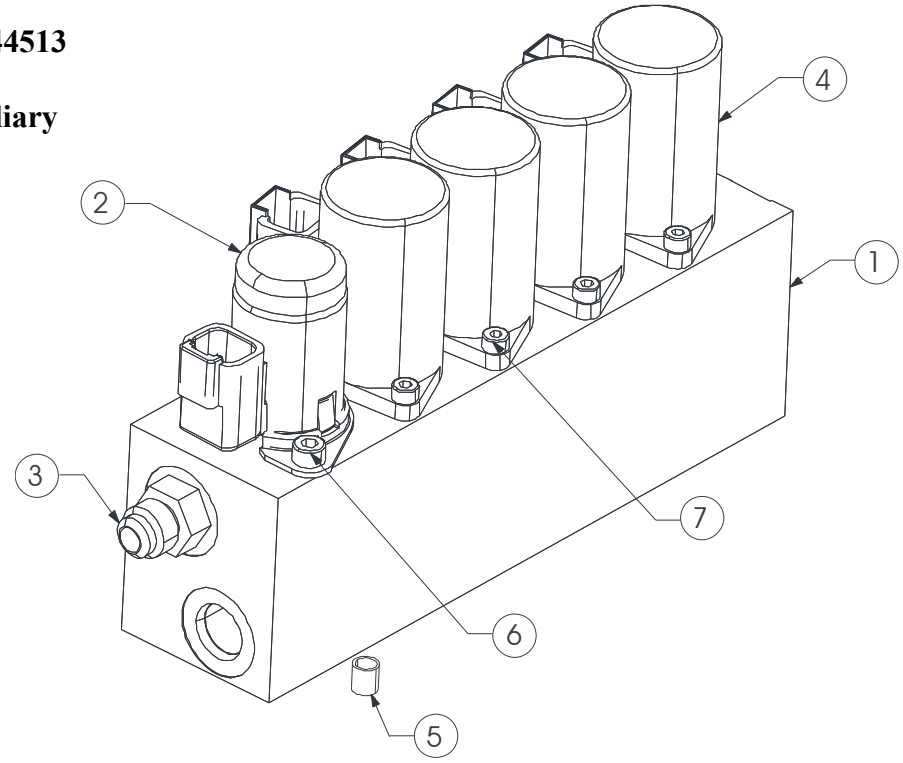

244511_244513

Ref. No.	Part No.	Description	Quantity 3 Bank Valve 244511	Quantity 5 Bank Valve 244513
1	240200	MANIFOLD/SOLENOID	1	-
	240189	MANIFOLD/SOLENOID	-	1
2	244655	VALVE/SOLENOID	1	1
	240202	KIT/SEAL SV98-T39	1	1
3	244518	FITTING/CHECK JIC06	1	1
4	244654	VALVE/PROPORTIONAL	2	4
	240201	KIT/SEAL EHPR98-T33	1	1
5	240196	PLUG/EXPANDER 7 MM	1	1
6	240197	SCREW/CAP SOCKET HEAD M5 X 10 MM	2	2
7	240198	SCREW/CAP SOCKET HEAD M4 X 12 MM	4	8

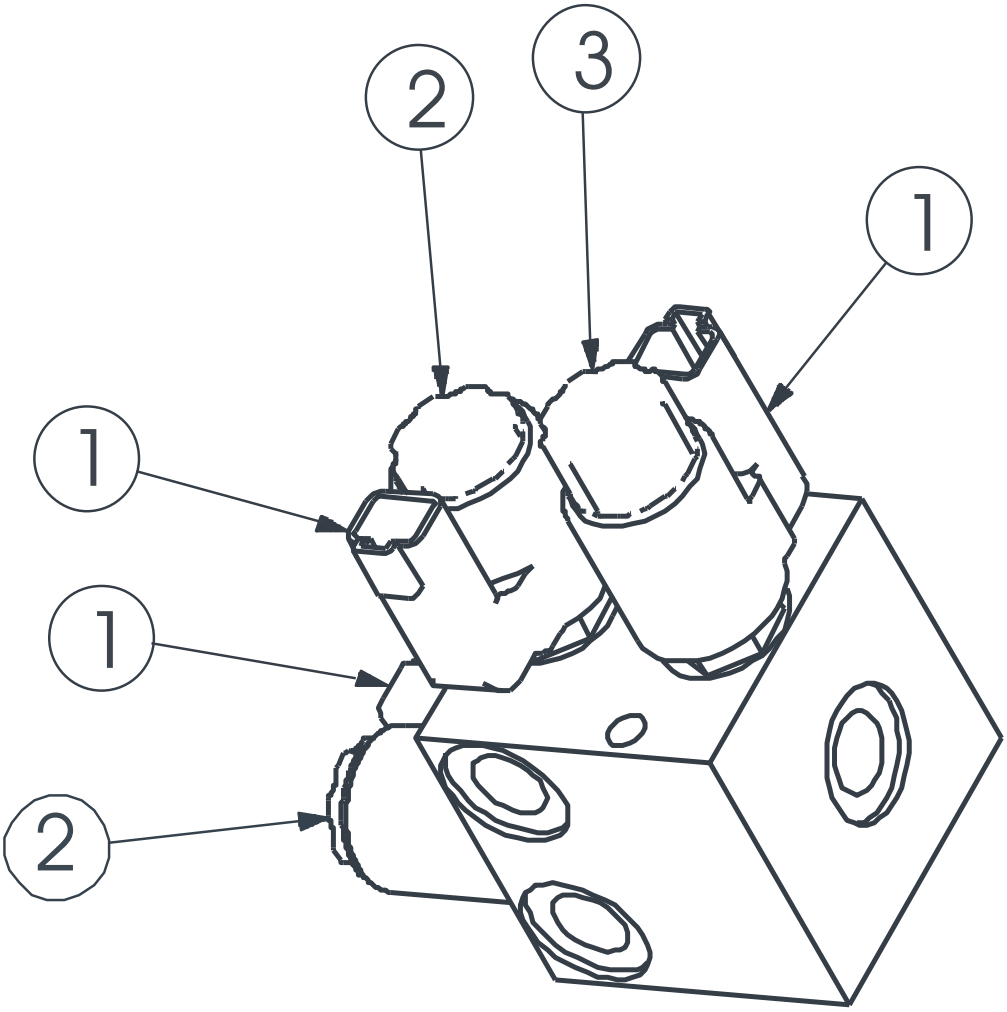

184363

Ref. No.	Part No.	Description	Quantity Hydraglide™
	184363	ASSY/MANIFOLD	1
1	184384	COIL	3
2	184389	CARTRIDGE	2
3	184388	CARTRIDGE	1

CONDENSOR, HEATER HOUSING AND HVAC HOUSING ASSEMBLY

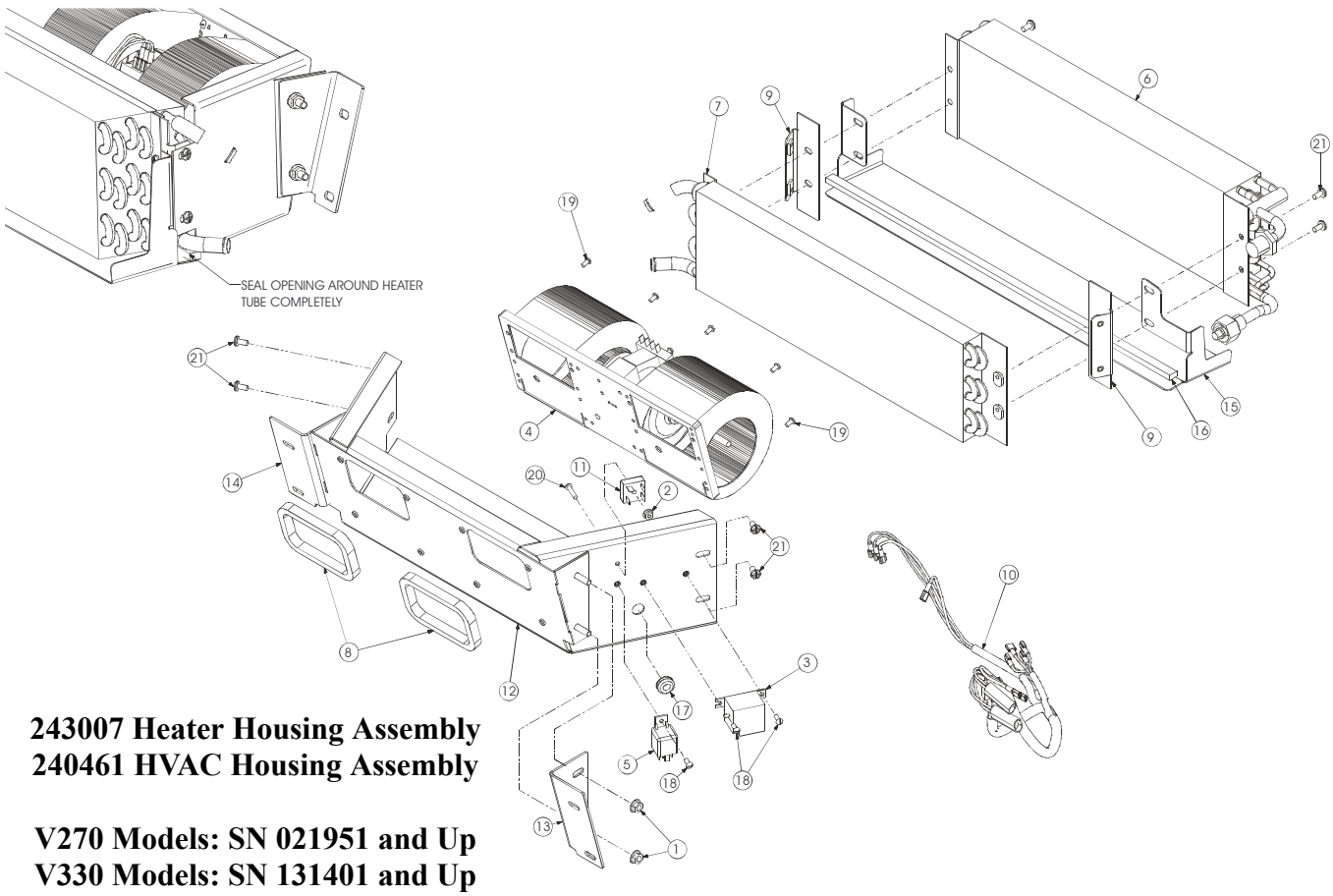

243007 Heater Housing Assembly
240461 HVAC Housing Assembly

V270 Models: SN 021951 and Up
V330 Models: SN 131401 and Up

243076 Condensor Assembly

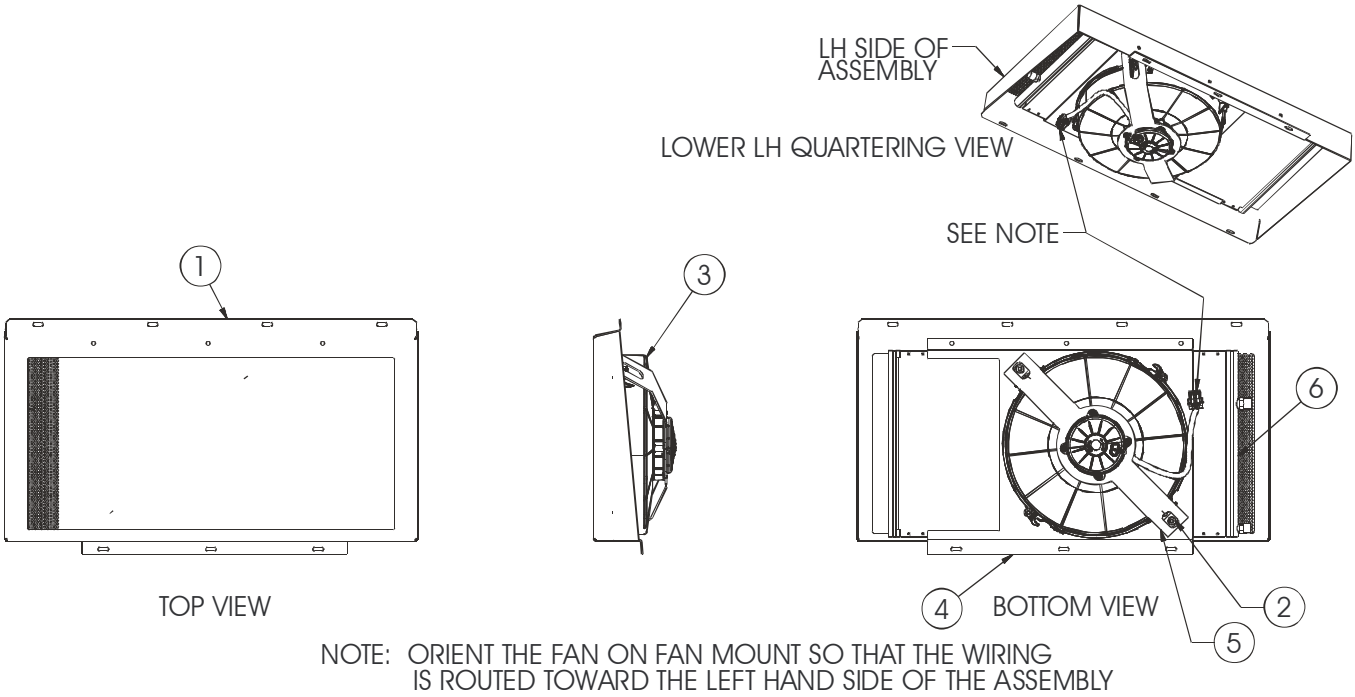

240461_243007_243076

CONDENSOR, HEATER HOUSING AND HVAC HOUSING ASSEMBLY

Ref. No.	Part No.	Description	Quantity Heater / HVAC
	240461	ASSEMBLY/HVAC HOUSING	1
	243007	ASSEMBLY/HEATER HOUSING	1
1	131842	NUT/SPIRALOCK™ 5/16	4
2	137797	NUT/SERRATED FLANGE #10	1
3	138623	SWITCH/PRESET COLD CONTROL (HVAC ONLY)	1
4	186151	BLOWER/DOUBLE	1
	194981	CONTROLLER/FAN SPEED (INCLUDES RESISTOR BLOCK)	1
5	242145	RELAY/SEALED	1
6	242471	EVAPORATOR (HVAC ONLY)	1
7	242477	CORE/HEATER	1
8	242478	FOAM/SEAL HVAC HOUSING	2
9	242842	FLANGE/CORE MOUNT	2
10	242874	HARNESS/HVAC BOX	1
11	242875	PACK/RECTIFIER	1
12	243383	MOUNT/BLOWER	1
13	243385	BRACKET/MOUNTING HVAC HOUSING LEFT	1
14	243386	BRACKET/MOUNTING HVAC HOUSING RIGHT	1
15	244804	PLATE/DRIP HVAC (HVAC ONLY)	1
16	244806	PAD/SEALING (HVAC ONLY)	1
17	420-36134	GROMMET 3/8	1
18	650548	SCREW/MACHINE ROUND HEAD #10 X 1/2 (HVAC ONLY)	3
	650548	SCREW/MACHINE ROUND HEAD #10 X 1/2 (HEATER ONLY)	9
19	650980	SCREW/MACHINE ROUND HEAD #10 X 3/8 (HVAC ONLY)	8
20	651192	SCREW/MACHINE ROUND HEAD CROSS RECESSED #10 X 1	1
21	651307	SCREW/MACHINE PAN HEAD CROSS RECESSED 1/4 X 1/2	8

Ref. No.	Part No.	Description	Quantity Condensor Assy
1	194701	COVER/CONDENSOR	1
2	210-32184	NUT/CENTERLOCK FLANGE 1/4	6
3	243075	FAN/CONDENSER	1
4	243078	MOUNT/FAN	1
5	50351408	BRACKET/CONDENSOR SUPPORT	1
6	L500595	CORE/CONDENSOR/AC	1

CONDENSOR, HEATER HOUSING AND HVAC HOUSING ASSEMBLY

SEAL OPENING AROUND HEATER TUBE COMPLETELY

INSERT TAB INTO OPENING ON HVAC CONTROL MOUNTING BRACKET

243007 Heater Housing Assembly
240461 HVAC Housing Assembly

V270 Models: SN 021950 and Before
V330 Models: SN 131400 and Before

243076 Condensor Assembly

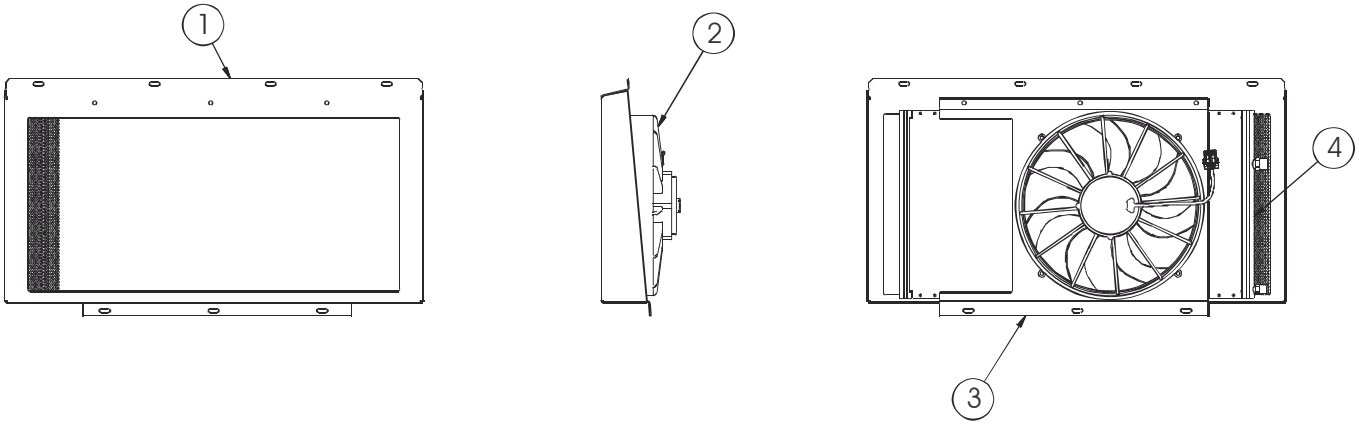

240461_243007_243076

CONDENSOR, HEATER HOUSING AND HVAC HOUSING ASSEMBLY

Ref. No.	Part No.	Description	Quantity Heater / HVAC
	240461	ASSEMBLY/HVAC HOUSING	1
	243007	ASSEMBLY/HEATER HOUSING	1
1	084175	NUT/HEX LOCK #10 (HVAC ONLY)	3
2	131842	NUT/SPIRALOCK™ 5/16	4
3	137797	NUT/SERRATED FLANGE #10	1
4	138623	SWITCH/PRESET COLD CONTROL (HVAC ONLY)	1
5	186151	BLOWER/DOUBLE	1
	194981	CONTROLLER/FAN SPEED (INCLUDES RESISTOR BLOCK)	1
6	242145	RELAY/SEALED	1
7	242471	EVAPORATOR (HVAC ONLY)	1
8	242477	CORE/HEATER	1
9	242478	FOAM/SEAL HVAC HOUSING	2
10	242842	FLANGE/CORE MOUNT	2
11	242874	HARNESS/HVAC BOX	1
12	242875	PACK/RECTIFIER	1
13	243383	MOUNT/BLOWER	1
14	243385	BRACKET/MOUNTING HVAC HOUSING LEFT	1
15	243386	BRACKET/MOUNTING HVAC HOUSING RIGHT	1
16	244442	MODULE/CONTROL (HVAC ONLY)	1
17	244443	MOUNT/BRACKET HVAC CONTROL (HVAC ONLY)	1
18	244444	CLAMP/CONTROL MODULE (HVAC ONLY)	1
19	244804	PLATE/DRIP HVAC (HVAC ONLY)	1
20	244806	PAD/SEALING (HVAC ONLY)	1
21	420-36134	GROMMET 3/8	1
22	650548	SCREW/MACHINE ROUND HEAD #10 X 1/2	3
23	650980	SCREW/MACHINE ROUND HEAD #10 X 3/8 (HVAC ONLY)	8
24	651192	SCREW/MACHINE ROUND HEAD CROSS RECESSED #10 X 1	1
25	651307	SCREW/MACHINE PAN HEAD CROSS RECESSED 1/4 X 1/2	8

Ref. No.	Part No.	Description	Quantity Condensor Assy
1	194701	COVER/CONDENSOR	1
2	243075	FAN/CONDENSER	1
3	243078	MOUNT/FAN	1
4	L500595	CORE/CONDENSOR/AC	1

LIFT ASSIST PUMP AND CYLINDER

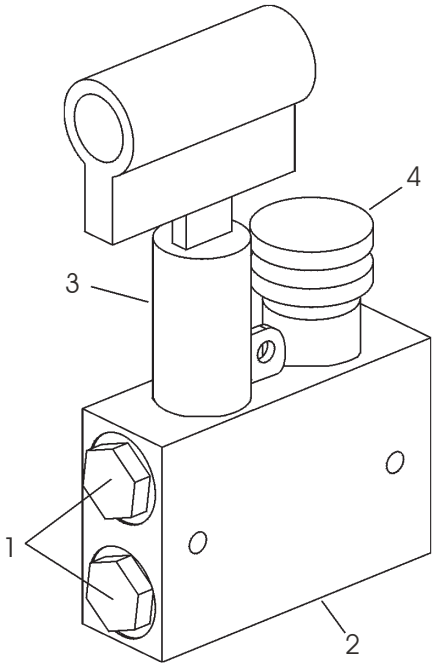

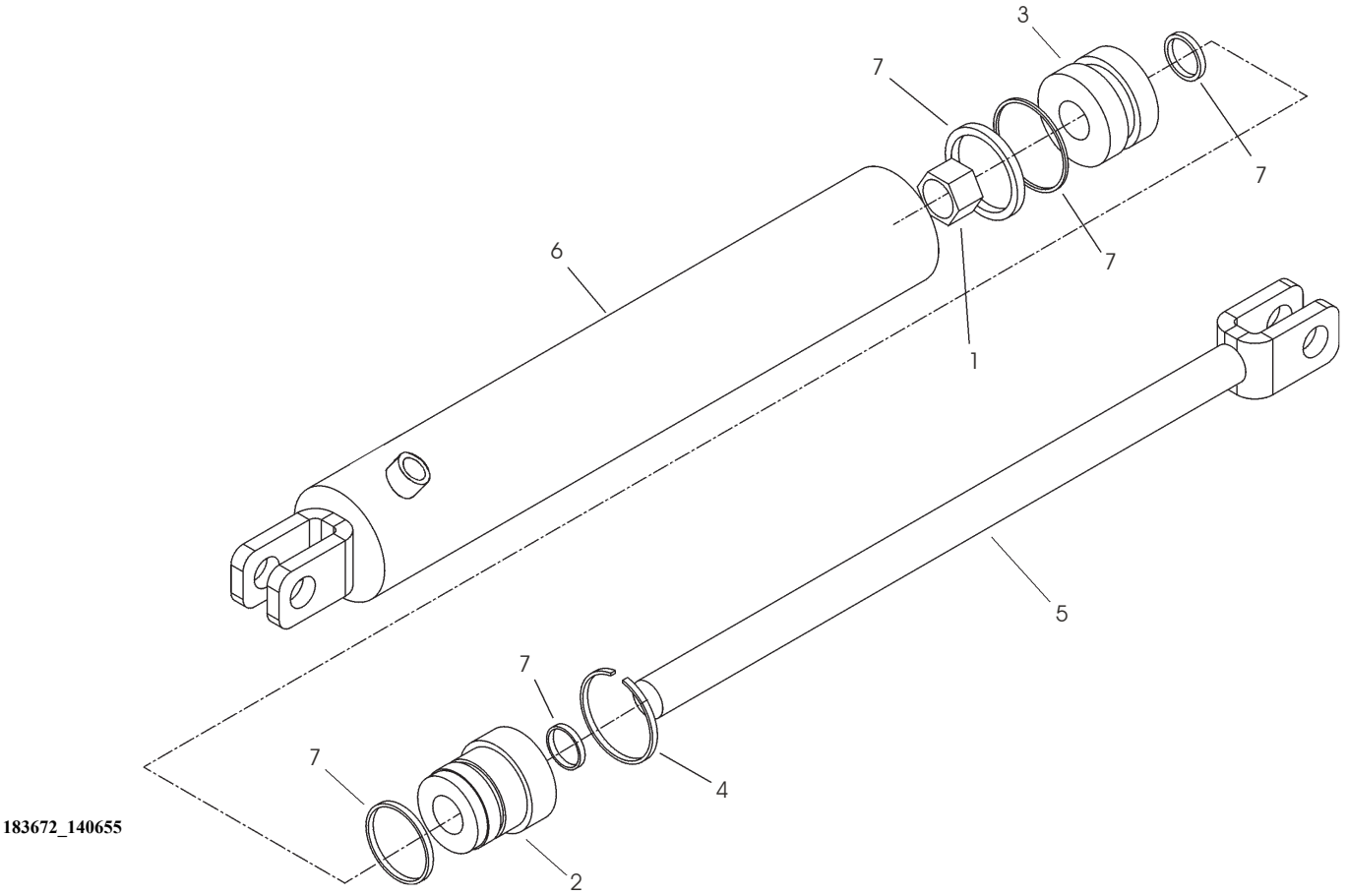

Ref. No.	Part No.	Description	Quantity Pump
	183672	ASSEMBLY/PUMP	1
1	131529	PLUG/SAE08	2
2	137433 a	BLOCK/VALVE	1
3	137437	CARTRIDGE/PUMP	1
4	137438	VALVE/NEEDLE	1

a) Includes orifice.

Ref. No.	Part No.	Description	Quantity Cylinder
	140655	CYLINDER/HYDRAULIC SINGLE ACTING	1
1	184803	NUT	1
2	184802	HEAD	1
3	184801	PISTON	1
4	184800	RING/SNAP	1
5	184799	SHAFT WITH CLEVIS	1
6	184798	BARREL WITH CLEVIS AND PORTS	1
7	184797	KIT/REPAIR	1

PUMP - POWER-A-TACH

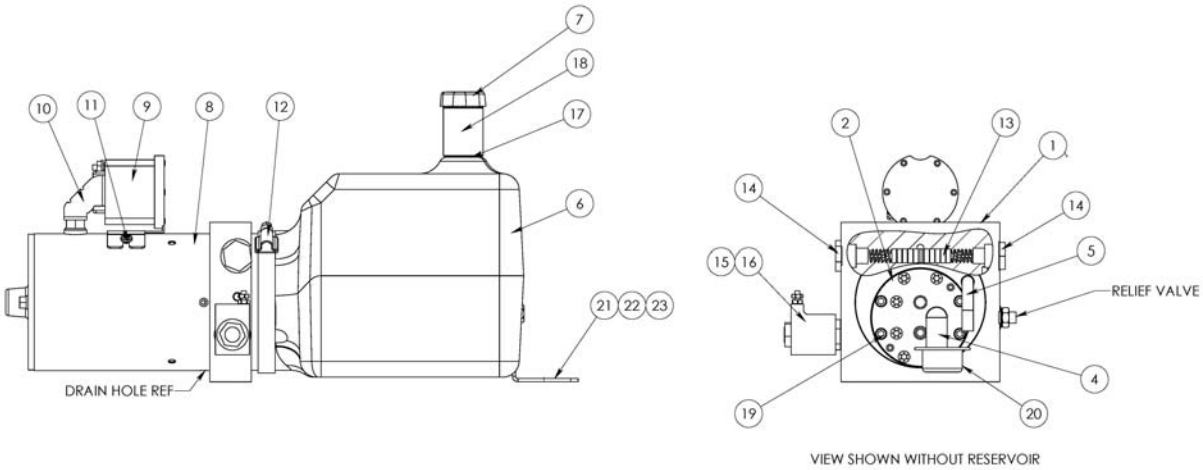

Ref. No.	Part No.	Description	Quantity
	242617	UNIT/POWER/HYDRAULIC	
1	50250022	Base Assy, M3554,Mod,Std Mtr/Mt	1
2	50250023	P Assy,QM,MDLR,DC,BRGS BLD RSV	1
3	50250024	O-Ring, 2.25 X @.38 X 0.06-035	1
4	50250025	Tube, Suction, 90 Dgr.3/8NPT	1
5	50250026	Tube, Return, 90Deg, 1/8 NPT	1
6	50250027	RESV, Plastic, 6.7X6.7X9, H/MT	1
7	50250028	Plug, RESEV, Breather-Filler	1
8	50250029	Motor, DC, 12V, 4.5", 1 Term	1
9	50250030	Switch, SOL, Act MTR ST, 12 VDC	1
10	50250031	Strap, Motor-Solenoid Connecting	1
11	50250032	Screw, Pan HD, Torx, 10-32 X 5/16	2
12	137811	HOSE/CLAMP #80	1
13	50250033	Valve, Piston Assy, Dblpilotorck	1
14	50250034	Valve, CK, Cart, Size8, W/Screen	2
15	50250035	Cartridge, 4-W/2-P, #8, 1/2" Stem	1
16	50250036	Coil, 10VDC, Grounded, Single Stud	1
17	50250037	Nipple, 3/4 NPT X 1-3/8 Close	1
18	50250038	Coupling, STD Merchant Pipe	1
19	50250039	Screw, SHC, 1/4-20 X 3.0, Blk OX	4
20	50250040	Filter, Screen M-Series Suct.	1
21	50250041	Bracket, MT,RESV, 90 Deg, Single	1
22	654024	WASHER/LOCK 5/16	1
23	650485	SCREW/CAP 5/16 X 5/8	1

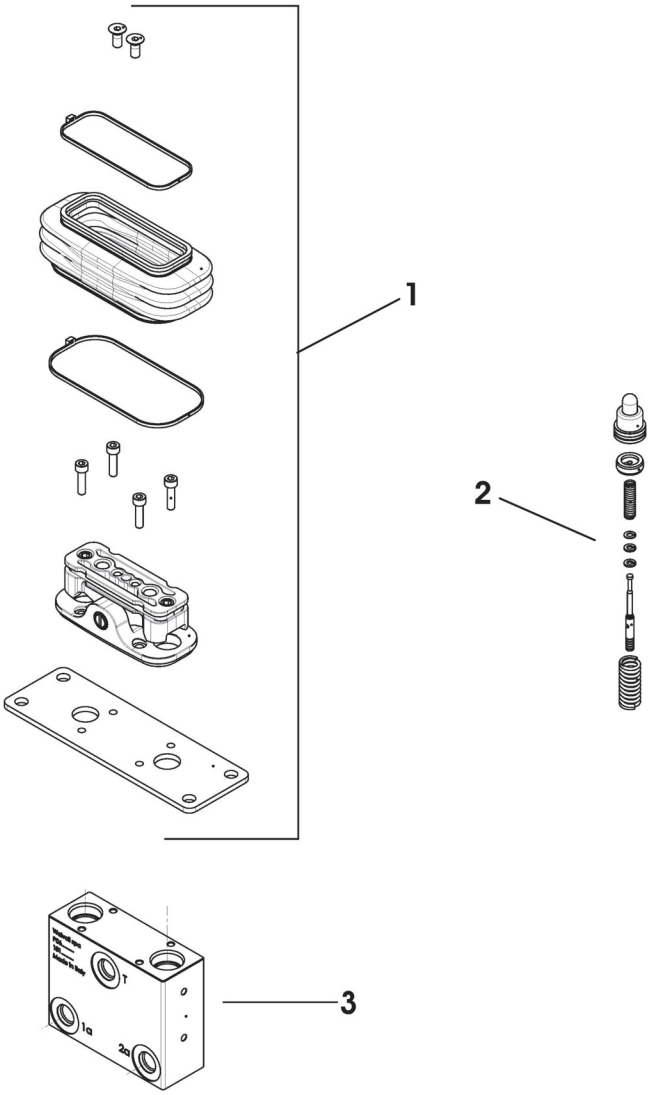

Ref. No.	Part No.	Description	Quantity Foot Valve
	193335	VALVE/FOOT	
1	50351499	KIT/KINEMAMTIC	1
2	50351505	KIT/CURVE	1
3	50351506	BODY/VALVE	1

Section Notes

SECTION C: KITS AND ACCESSORIES

811486 Backup Alarm Kit 165
811487 Side Window Kit 166
811488 Rearview Mirror Kit. 167
811502 Cab Door Kit 168
811494 Counterweight Kit 170
811489 AM/FM Radio Kit 170
811500 Heater/Defroster Kit. 171
811277 Pre-Cleaner Kit 177
811226 14-Pin Electrical Auxiliary Connector Kit. 178
811496 Warning Lamp Kit 179
811613 Rear Wiper Kit 180
811510 Flasher Kit 181
184130 and 50352739 Auxiliary Couplers Service Kits 182
811537 Power-A-Tach® Kit 183
811644 Parking Brake Release Kit 185
811497 Four-Point Lift Kit 186
811625 Self-Leveling Kit 187
50850001 Counterweight Kit 188
50850048 Single-Point Lift Kit 189
50850116 Impact-Resistant Door Kit 190

Other Available Accessories

Filters

Fuel Separator Filter 203822
Fuel Filter 193024
Engine Oil Filter 195568
Hydraulic Filter Assembly 243117
Includes Filter Indicator. 243118
and Hydraulic Oil Filter. 074830
Tank Vent Filter. 138877

Analysis Kits - Contact your Gehl Dealer

Hydraulic Oil Analysis Kits (10) 272806
Engine Oil Analysis Kits (10). 272809
Fuel Analysis Kit (1). 272811
Coolant Analysis Kits (10) 272812

811486 Backup Alarm Kit

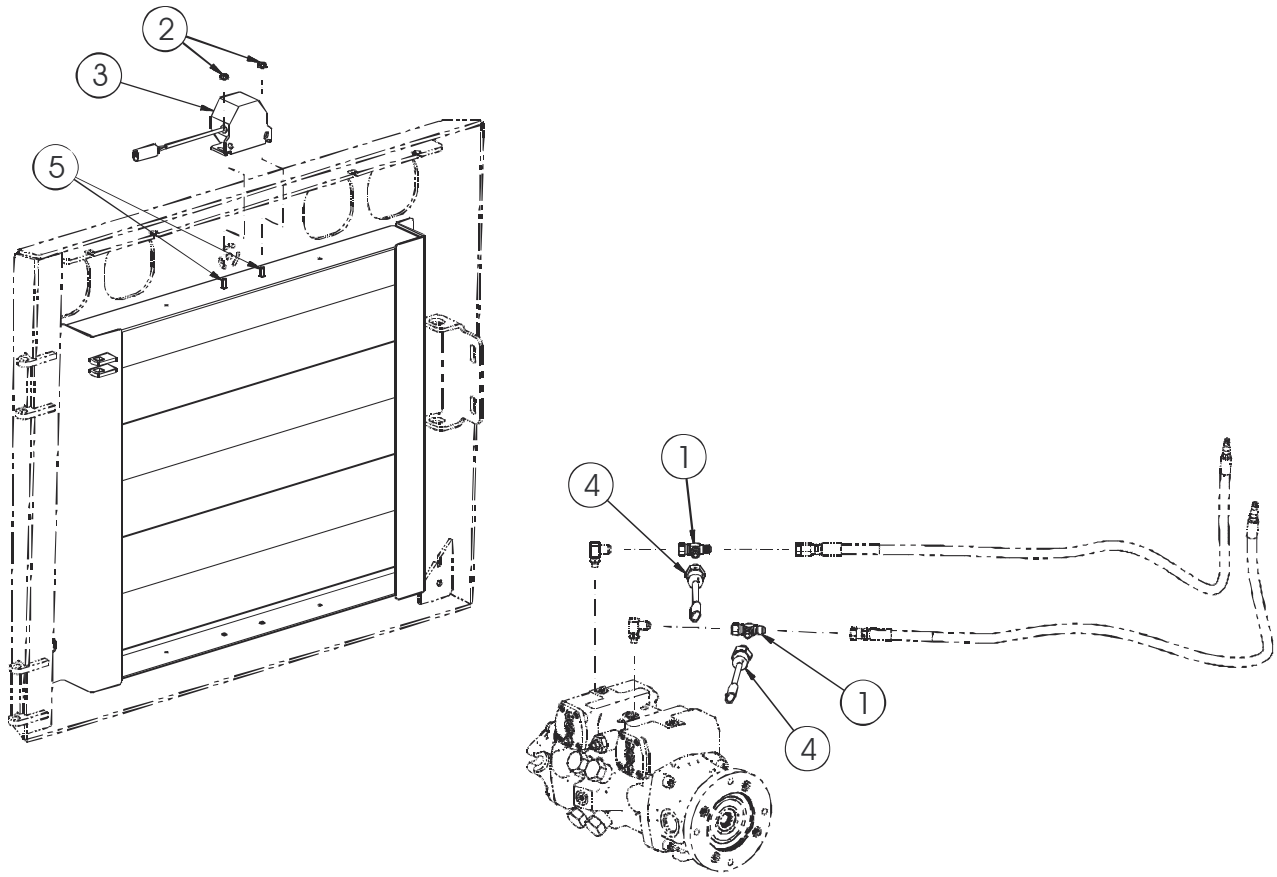

Ref. No.	Part No.	Description	Qty.
	811486	KIT/BACKUP ALARM	
1	072806	TE MJ06 FJS06 MJ06	2
2	134588	NUT/SPIRALOCK 1/4-20	2
3	140880	ALARM/BACK-UP	1
4	187045	SWITCH/PRESSURE	2
5	650758	CB 1/4x3/4 C5ZY	2

811487 Side Window Kit

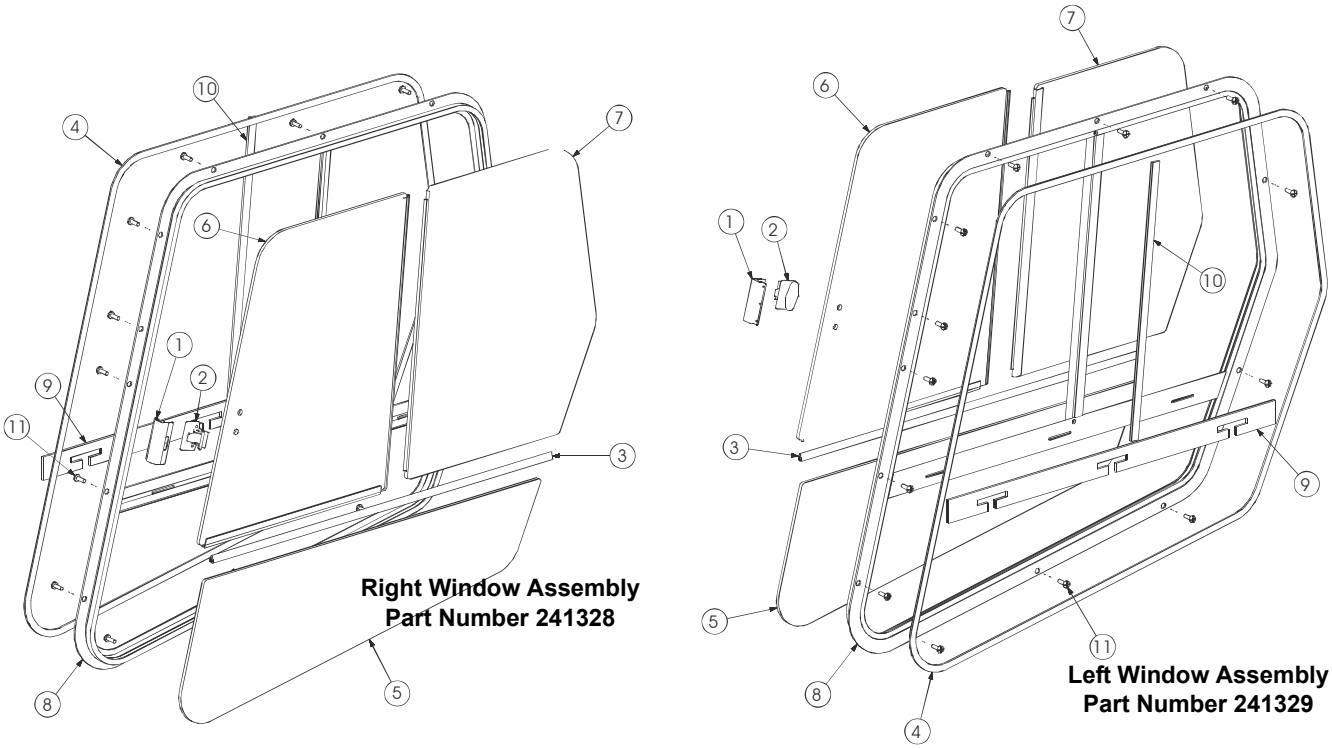

Ref. No.	Part No.	Description	Qty.
	811487	KIT/SIDE WINDOW	
1	242779	STRIKER	2
2	242780	LATCH ASS'Y	2
3	242781	RAIL/SLIDE	2
4	242784	SEAL/WINDOW	2
5	242786	WINDOW/LOWER	2
6	242789	WINDOW/FRONT RH	1
	242787	WINDOW/FRONT LH	1
7	242790	WINDOW/REAR RH	1
	242788	WINDOW/REAR LH	1
8	242819	FRAME/WINDOW RH	1
	242818	FRAME/WINDOW LH	1
9	50353122	FOAM/WINDOW/HORIZONTAL	2
10	50353125	FOAM/WINDOW/HORIZONTAL	2
11	651308	PHMS CR 1/4X3/4 ZB	26

811488 Rearview Mirror Kit

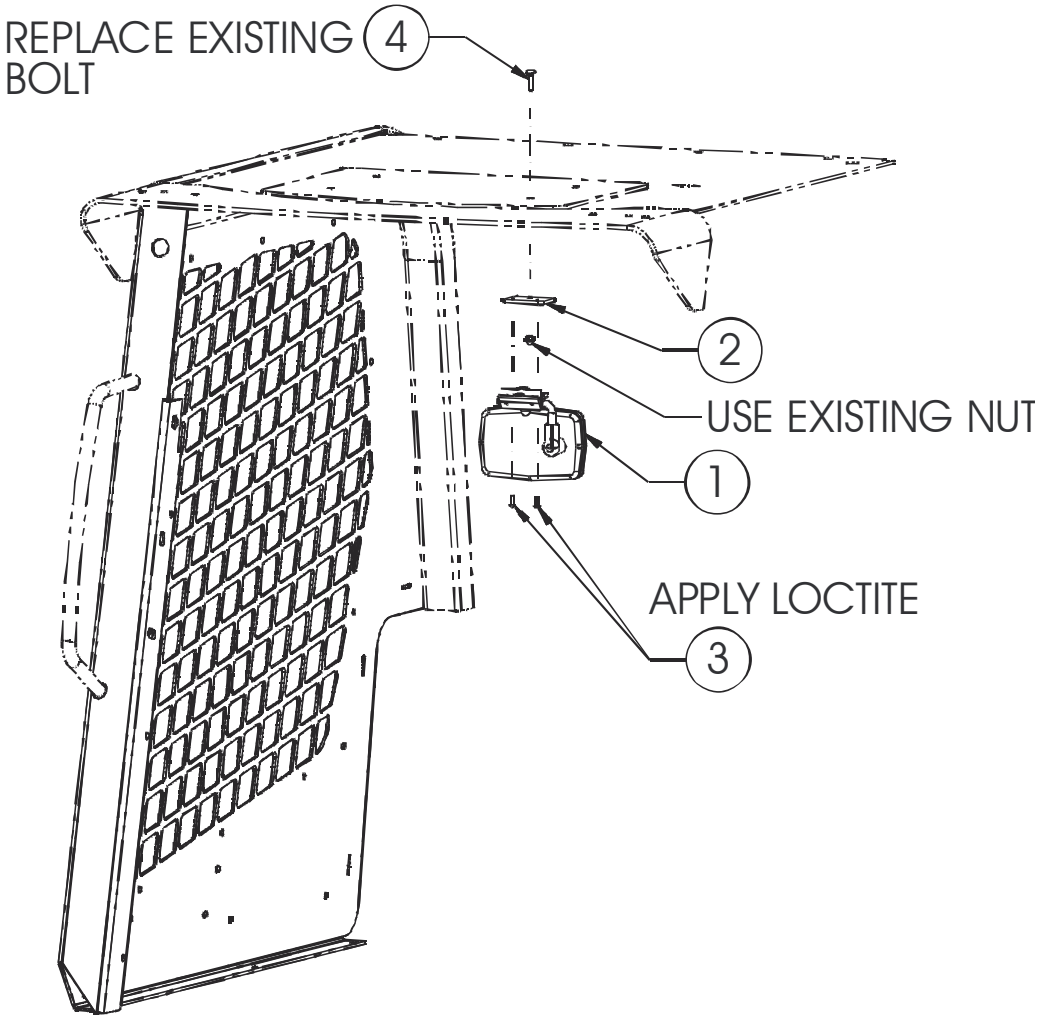

Ref. No.	Part No.	Description	Qty.
	811488	KIT/REARVIEW MIRROR	
1	132353	REARVIEW MIRROR	1
2	242805	MTG PLATE/MIRROR	1
3	650548	RHMS SLT #1024X1/2 CZY	2
4	50657002	CB 1/4x7/8 C5ZY	1

811502 Cab Door Kit

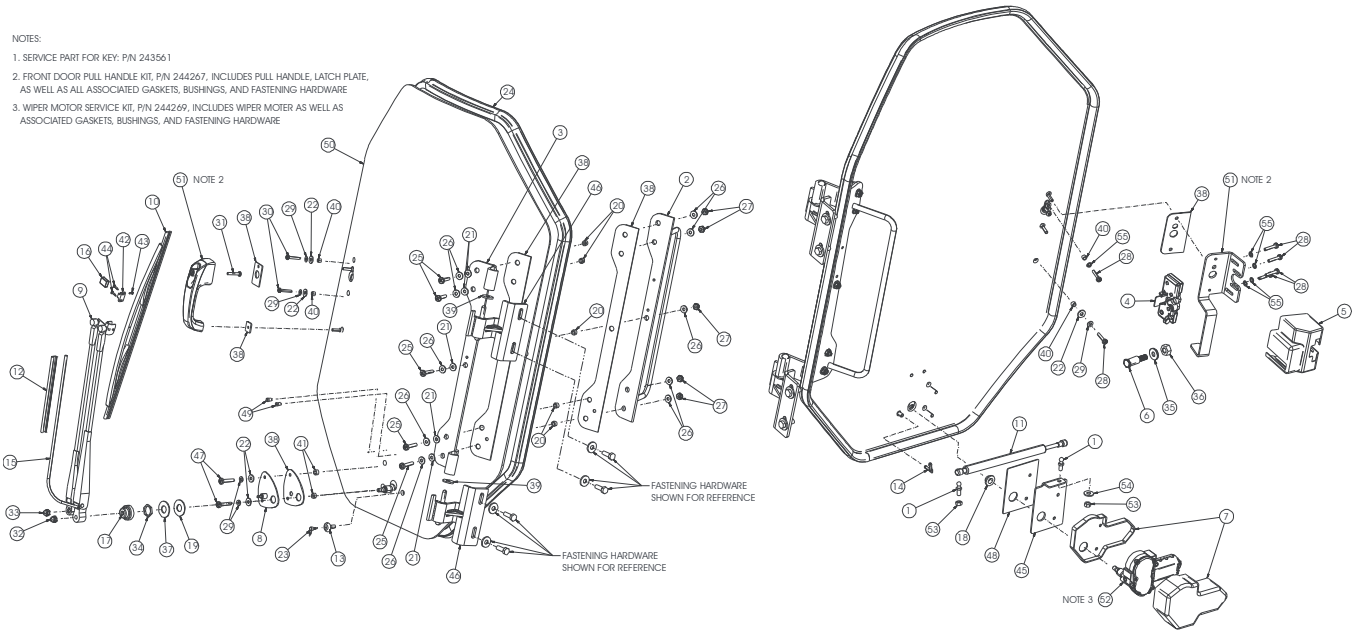

Ref. No.	Part No.	Description	Qty.
	811502	KIT/CAB DOOR	
1	122485	STUD/BALL 10MM	2
2	242921	BACKER/HINGE	1
3	242923	HINGE/DOOR	1
4	242927	LATCH/DOOR	1
5	242928	COVER/LATCH	1
6	242930	STRIKER	1
7	242934	COVER/WIPER MOTOR	1
8	242937	PLATE/PANTOGRAPH	1
9	242938	ARM/WIPER	1
10	242939	BLADE/WIPER ASS'Y	1
11	242942	SPRING/GAS	1
12	242943	CLIP/WIPER HOSE	1
13	242944	GROMMET/WASHER HOSE	1
14	242945	ELBOW/WASHER HOSE	1
15	242946	HOSE/WASHER	1
16	242947	HEAD/SPRITZER	1
17	242948	RAIN SEAL/WIPER	1
18	242951	GROMMET/DRIVE SHAFT	1
19	242954	WASHER/ FIBER M20	1
20	242955	BUSHING/.31 ID X .50 OD	5
21	242956	WASHER/RUBBER 5/16	5
22	242957	WASHER/RUBBER 1/4	5
23	242961	ELBOW/WASHER HOSE	1
24	242963	SEAL/BULB	1
25	242970	PHMS 5/16-18 X 1.50" BO	5
26	242973	FW 5/16 BO	10
27	242974	HLN INST 5/16-18 BO	5
28	242978	PHMS M6 X 25 MM BO	6
29	242980	FW 1/4" BO	5
30	242981	PHMS 1/4-20 X 1.00 BO	2
31	242982	PHMS M6 X 35 MM BO	1
32	242984	NUT/ACORN M8 BO	1
33	242985	NUT/ACORN M5 BO	1
34	242986	HN M18 BO	1
35	242990	WASHER/STRIKER BOLT	1
36	242991	NUT/STRIKER BOLT	1
37	242995	FW M20 BO	1
38	243021	GASKET KIT	1
39	243022	BUSHING/BRONZE	2
40	243029	BUSHING/.384" O.D.	4
41	243030	BUSHING/.25 ID X .50 OD	2
42	243709	CHICLET/MTG BRKT	1
43	243711	M2 X 9.5 PHP Z	1
44	243712	#6-18 X 5/8 PHP BLK	2
45	244162	PLATE/GAS SPRING MOUNT	1
46	244212	HINGE/CABSIDE	2
47	244213	PHMS 1/4-20 X 1.50 BO	2
48	244214	GASKET/GAS SPRING MOUNT	1
49	244238	PLUG .25 DIA. X .25 DEEP	2
50	244242	KIT/FRONT DOOR GLASS	1
51	244267	KIT/FRONT DOOR PULL HAND	1
	243561	KEY/FRONT DOOR LATCH	1
52	244269	KIT/WIPER MOTOR SERVICE	1
53	653007	HN 5/16 C2ZY	2
54	654004	FW 5/16 AWZY	1
55	654052	LW INT T 1/4 AZY	5

811502 Cab Door Kit
Door Completing Package

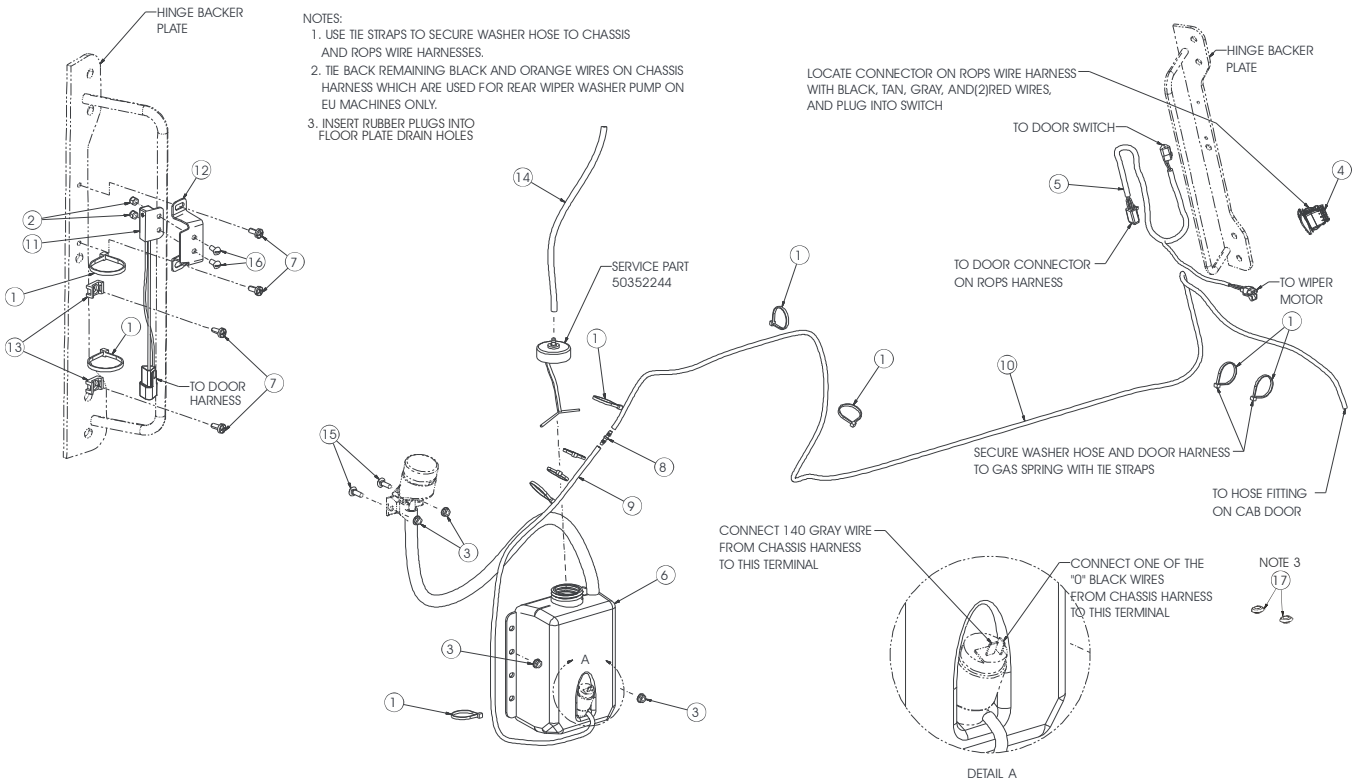

Ref. No.	Part No.	Description	Qty.
1	055648	TIE/CABLE .19X7.50 BLACK	11
2	084174	HLN INST #1224 CZY	2
3	210-19470	HN FL SLOC 5/16 CZY	4
4	242293	SWITCH/WIPER-WASHER	1
5	242866	HARNESS/DOOR V2700V	1
6	242884	RESERVOIR/WASHER FLUID	1
	243061	PUMP/WASHER	1
	243062	FILL SPOUT/REMOTE	1
	243063	CAP/VENTED	1
7	242976	SHCS 1/4-20 X .25 BO	4
8	243450	BARB/HOSE	1
9	243504	HOSE/WASHER 34.00	1
10	243505	HOSE/WASHER 112.00	1
11	244668	SENSOR/PROXIMITY	1
12	244674	BRKT/MTG PROXIM SWITCH	1
13	50350018	CABLE TIE MNT .25 HOLE	2
14	50352352	TUBE/BREATHER	1
15	650573	CB 5/16X1 C5ZY	2
16	650812	RHMS SLT #1224X1/2 CZY	2
17	192182	PLUG/RUBBER	2

811494 Counterweight Kit
V270 Models: SN 021600 and Before

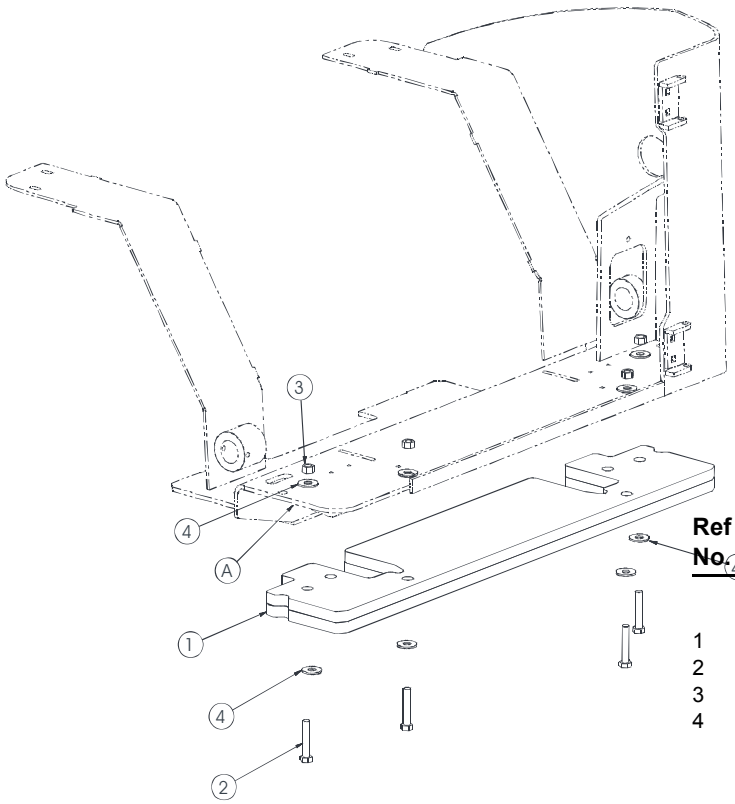

Ref No.	Part No.	Description	Qty.
	811494	KIT/COUNTERWEIGHT	
1	242719	COUNTERWEIGHT	1
2	650859	CS 5/8X3-1/4 C5ZY	4
3	653021	HN 5/8 C2ZY	4
4	654012	FW 5/8 AWZY	8

811489 AM/FM Radio Kit

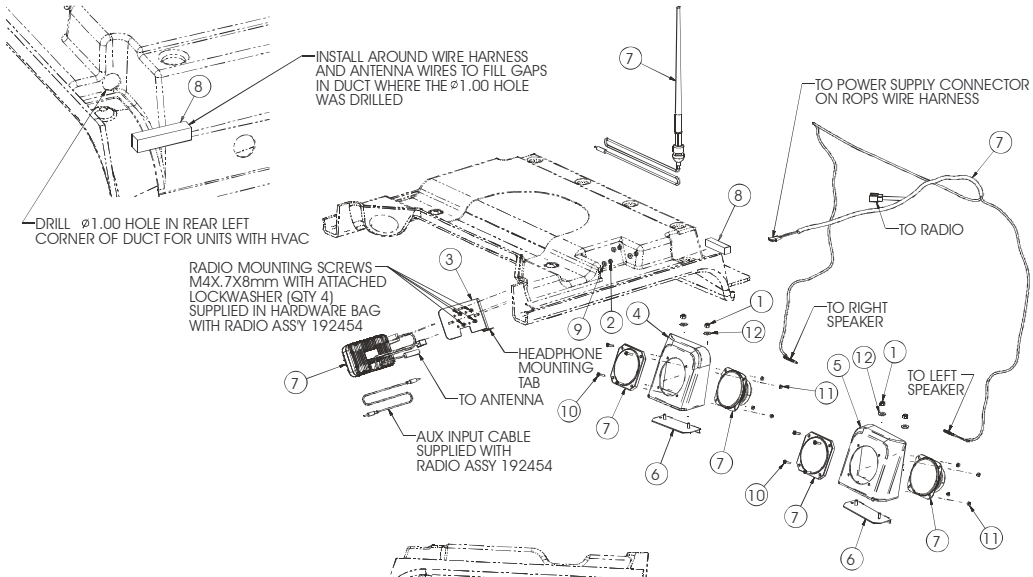

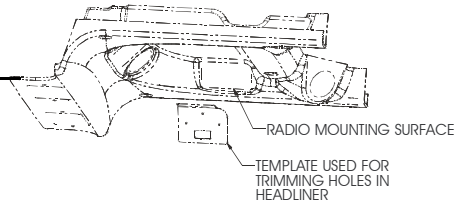

Ref No.	Part No.	Description	Qty.
	811489	KIT/AM-FM RADIO	
1	071401	HLN INST 1/4 CZY	4
2	084175	HLN INST #1024 CZY	3
3	242089	RADIO MNT ASS'Y	1
4	242342	HOUSING/SPEAKER RH	1
5	242343	HOUSING/SPEAKER LH	1
6	243086	MOUNT/SPEAKER	2
7	243330	PACKAGE/RADIO AM-FM-WB	1
8	50353330	SEAL/FOAM	1
9	650584	FW #10 AZY	3
10	651778	PHMS CR #832X3/4 CBO	8
11	653002	HN MS #832 CZY	8
12	654002	FW 1/4 AWZY	4

811500 Heater/Defroster Kit

V270 Models: SN 021951 and Up
V330 Models: SN 131401 and Up

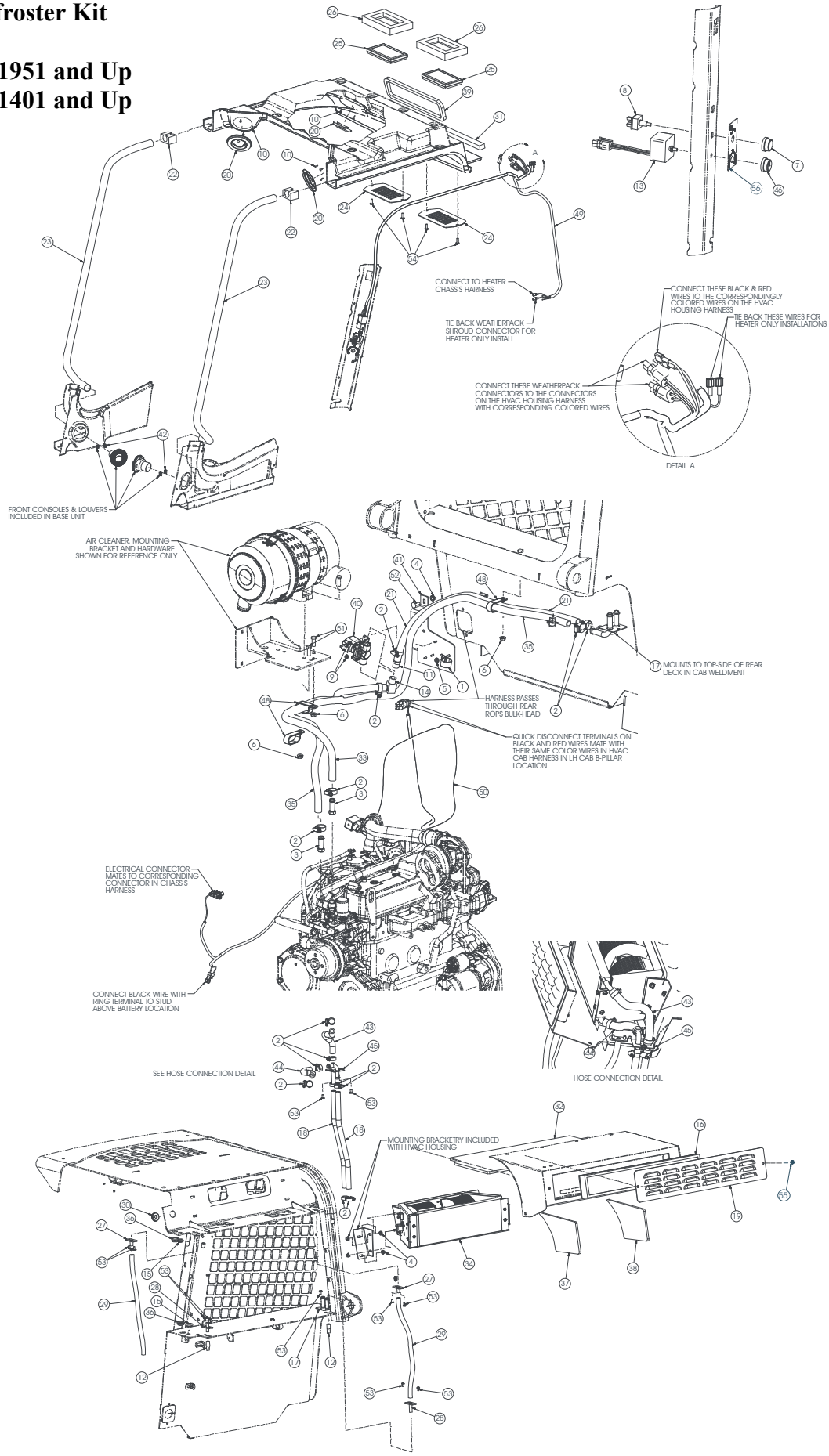

811500 Heater/Defroster Kit
Parts Listing

V270 Models: SN 021951 and Up
V330 Models: SN 131401 and Up

Ref. No.	Part No.	Description	Qty.
	811500	KIT/HEATER-DEFROSTER	
1	058805	CLAMP/HOSE 1.12X.41 HOLE	1
2	095955	CLAMP/HOSE #10	14
3	104052	ST-L HB10-MBSPT06	2
4	131842	HN FL SLOC 5/16 C	6
5	134588	NUT/SPIRALOCK 1/4-20	1
6	134852	NUT/SPIRALOCK 3/8-16	3
7	136304	KNOB/HEATER SWITCH	1
8	136305	SWITCH/HEATER	1
9	137797	NUT/SERR FLANGE 10-24	2
10	137821	SCREW/#6 X .5 SM/PHIL FH	16
11	186193	ST 1/2MPT X 5/8 HOSE	1
12	187030	DRIP CAP	2
13	189033	MODULE/AC CONTROL	1
14	191351	ELBOW 90/1/2 NPT	1
15	192182	PLUG/RUBBER	2
16	195660	FILTER/HVAC FRESH AIR	1
17	241208	PLATE/HEATER TUBES	1
18	241209	HOSE/HEATER	2
19	241486	PLATE/COVER LOUVERED	1
20	242437	VENT	4
21	242509	HOSE/HEATER	1
22	242534	PLUG/PASS-THROUGH TUBE	2
23	242537	TUBE/FORWARD HVAC	2
24	242831	COVER/RECIRC	2
25	242832	FILTER/RECIRC	2
26	242833	PAD/SEALING FILTER	2
27	242851	WLDMT/DRAIN TUBE	2
28	242853	WLDMT/DRAIN TUBE	2
29	242861	HOSE/DRAIN	2
30	242862	GROMMET .62ID .188GW 1.2	1
31	242863	PAD/FOAM SEALING STRIP	1
32	242917	PAD/HOUSING TOP	1
33	242950	HOSE/HEATER	1
34	243007	ASSY/HEATER HOUSING	1
35	243008	HOSE/HEATER	1
36	243009	GROMMET .69ID .250GW 1.0	2
37	243013	PAD/HOUSING LH	1
38	243014	PAD/HOUSING RH	1
39	243017	PAD/HVAC HEADLINER SEAL	1
40	243350	VALVE/SOLENOID HTR/AC	1
41	243358	BRKT/MTG HEATER VALVE	1
42	243445	CLIP/HOSE RETAINING	4
43	243737	HOSE/MOLDED HTR (SUPPLY)	1
44	243738	HOSE/MOLDED HTR (RETURN)	1
45	243741	HEATER TUBE WLDMN'T	1
46	244496	KNOB/HVAC TEMP CONTROL	1
47	244821	CAP/TUBE .50 TUBE OD	2
48	271341	CLAMP/HOSE 1.00X.41 HOLE	3
49	50351041	HARNESS/HVAC CAB	1
50	50351045	HARNESS/HEATER CHASSIS	1
51	650490	CS 3/8X1 C5ZY	2
52	651065	CB SN 5/16X1 C5ZY	2
53	651307	PHMS CR 1/4X1/2 ZB	12
54	651308	PHMS CR 1/4X3/4 ZB	4
55	242482	KNOB/CLAMPING	2
56	243973	DECAL/FAN SPD	1

811500 Heater/Defroster Kit

V270 Models: SN 021950 and Before
V330 Models: SN 131400 and Before

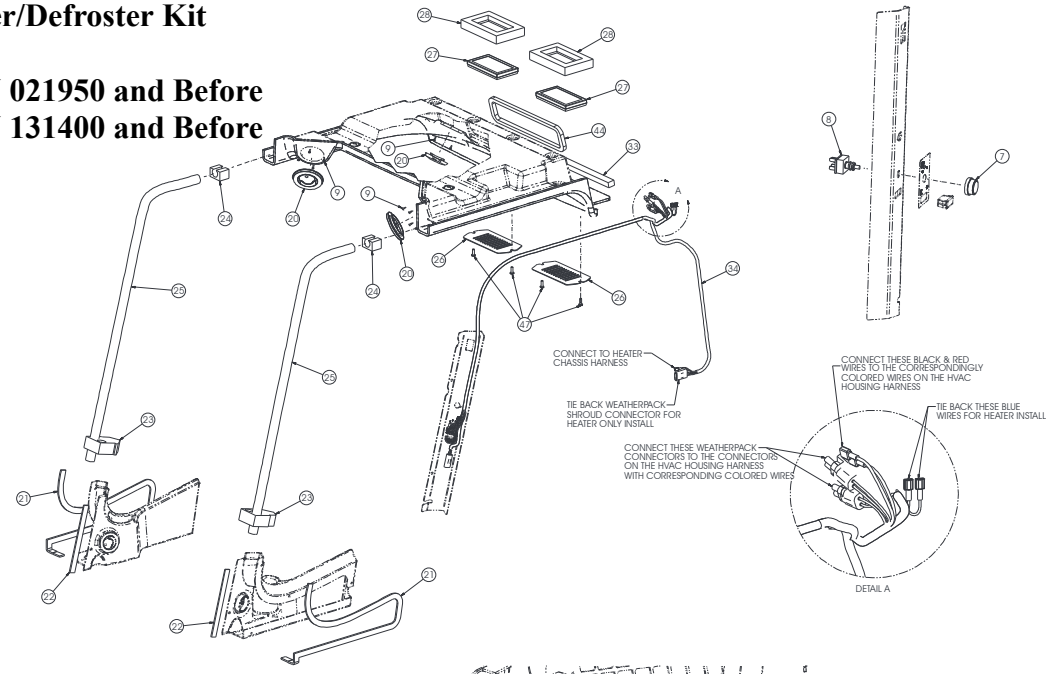

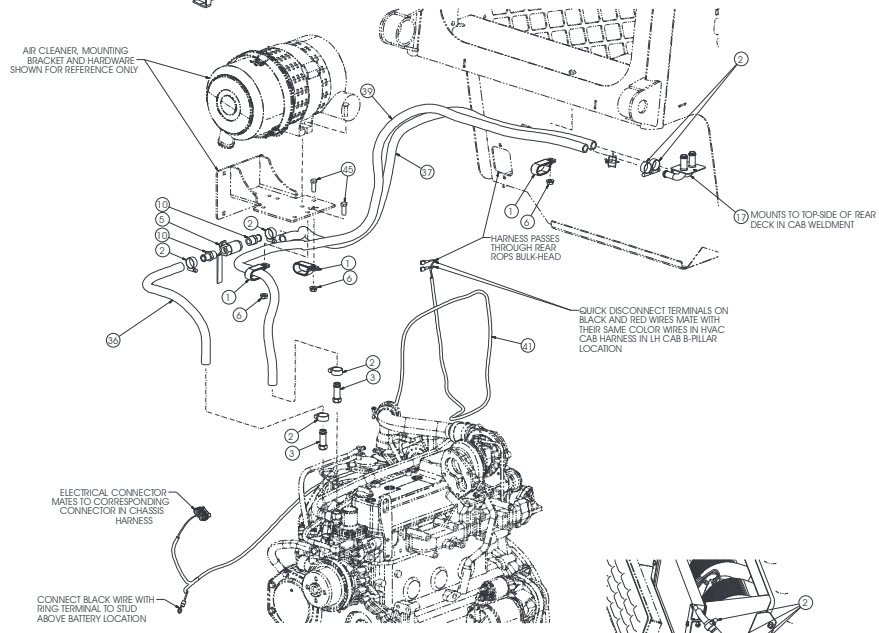

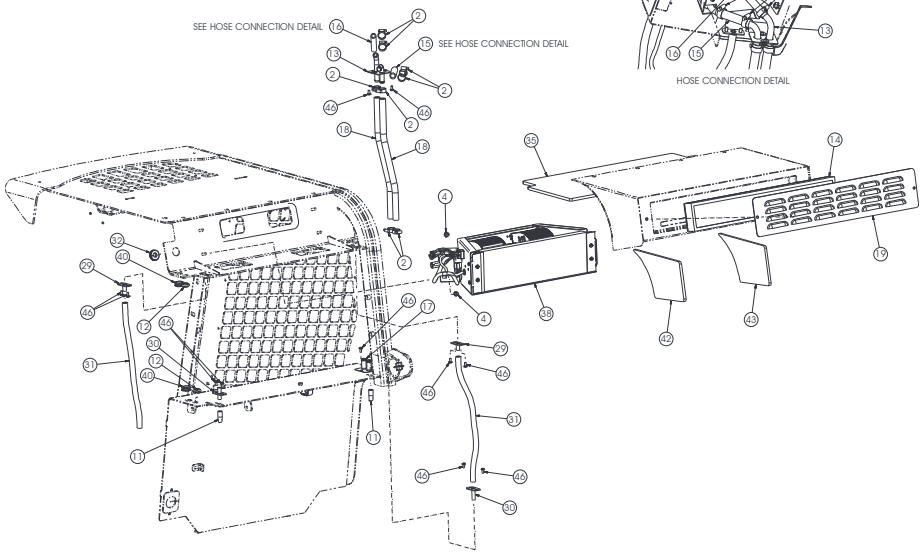

811500 Heater/Defroster Kit
Parts Listing

V270 Models: SN 021950 and Before
V330 Models: SN 131400 and Before

Ref. No.	Part No.	Description	Qty.
	811500	KIT/HEATER-DEFROSTER	
1	067849	CLAMP/HOSE	3
2	095955	CLAMP/HOSE	14
3	104052	HOSE CPL 5/8 BD X 3/8 BSPT	2
4	131842	NUT/SPIRALOCK™ 5/16	4
5	132504	VALVE/BALL	1
6	134852	NUT/SPIRALOCK 3/8-16	3
7	136304	KNOB/HEATER SWITCH	1
8	136305	SWITCH/HEATER	1
9	137821	SCREW/TAPPING #6 X 1/2	16
10	186193	FITTING/STRAIGHT 1/2 X 5/8	2
11	187030	CAP/DRIP	2
12	192182	PLUG/RUBBER	2
13	195591	TUBE/HEATER	1
14	195660	FILTER/HVAC FRESH AIR	1
15	240523	HOSE/HEATER	1
16	240585	HOSE/HEATER	1
17	241208	PLATE/HEATER TUBES	1
18	241209	HOSE/HEATER	2
19	241486	PLATE/COVER LOUVERED	1
20	242437	VENT	4
21	242527	SEAL/SIDE CONSOLE	2
22	242530	SEAL/FRONT DUCT	2
23	242531	PLUG/DUCT PASS-THROUGH	2
24	242534	PLUG/PASS-THROUGH TUBE	2
25	242537	TUBE/FORWARD HVAC	2
26	242831	COVER/RECIRC	2
27	242832	FILTER/RECIRC	2
28	242833	PAD/SEALING FILTER	2
29	242851	TUBE/DRAIN	2
30	242853	TUBE/DRAIN	2
31	242861	HOSE/DRAIN	2
32	242862	GROMMET/HVAC COMPT	1
33	242863	PAD/FOAM SEALING STRIP	1
34	242873	HARNESS/HVAC CAB	1
35	242917	PAD/HOUSING TOP	1
36	243005	HOSE/HEATER	1
37	243006	HOSE/HEATER	1
38	243007	ASSY/HEATER HOUSING	1
39	243008	HOSE/HEATER	1
40	243009	PLUG/GROMMET	2
41	243011	HARNESS/CHASSIS HEATER	1
42	243013	PAD/HOUSING LEFT	1
43	243014	PAD/HOUSING RIGHT	1
44	243017	PAD/HVAC HEADLINER SEAL	1
45	650490	SCREW/CAP 3/8 X 1	2
46	651307	SCREW/MACHINE 1/4 X 1/2	12
47	651308	SCREW/MACHINE 1/4 X 3/4	4

811500 Heater/Defroster Kit

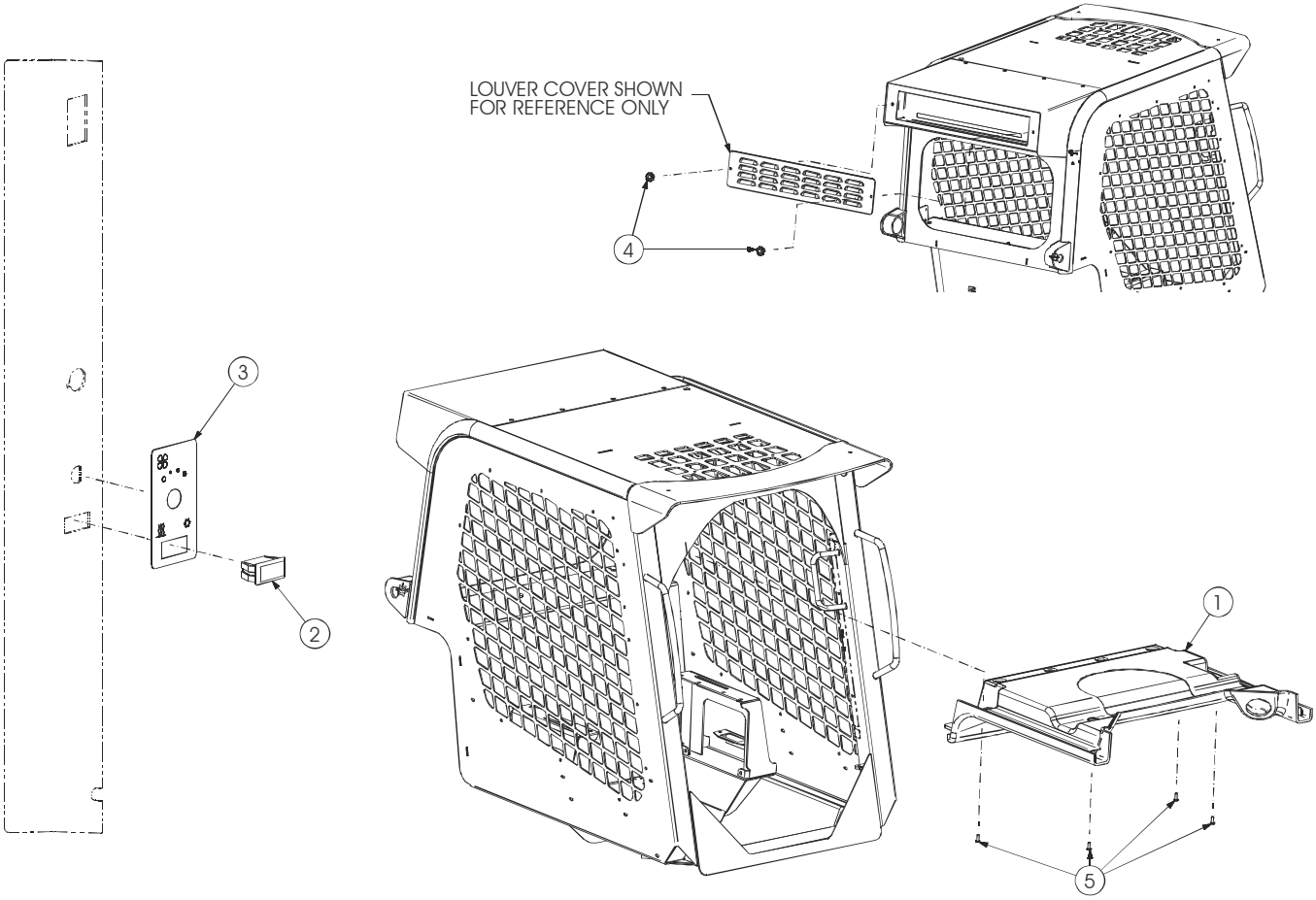

Ref No.	Part No.	Description	Qty.
1	241650	HEADLINER/DUCT A/C	1
2	244492b	PLUG/RUBBER 3/8	1
	241987a	PLUG/A/C SWITCH	1
3	243973b	DECAL/FAN SPD	1
	242229a	DECAL/FAN SPD	1
4	242482	KNOB/CLAMPING 5/16 STUD	2
5	651308	SCREW/MACHINE 1/4 X 3/4	4

a) V270 Models: SN 021346 and Before
b) V270 Models: SN 021347 and Up

811500 Heater/Defroster Kit

243007 Housing Service Parts

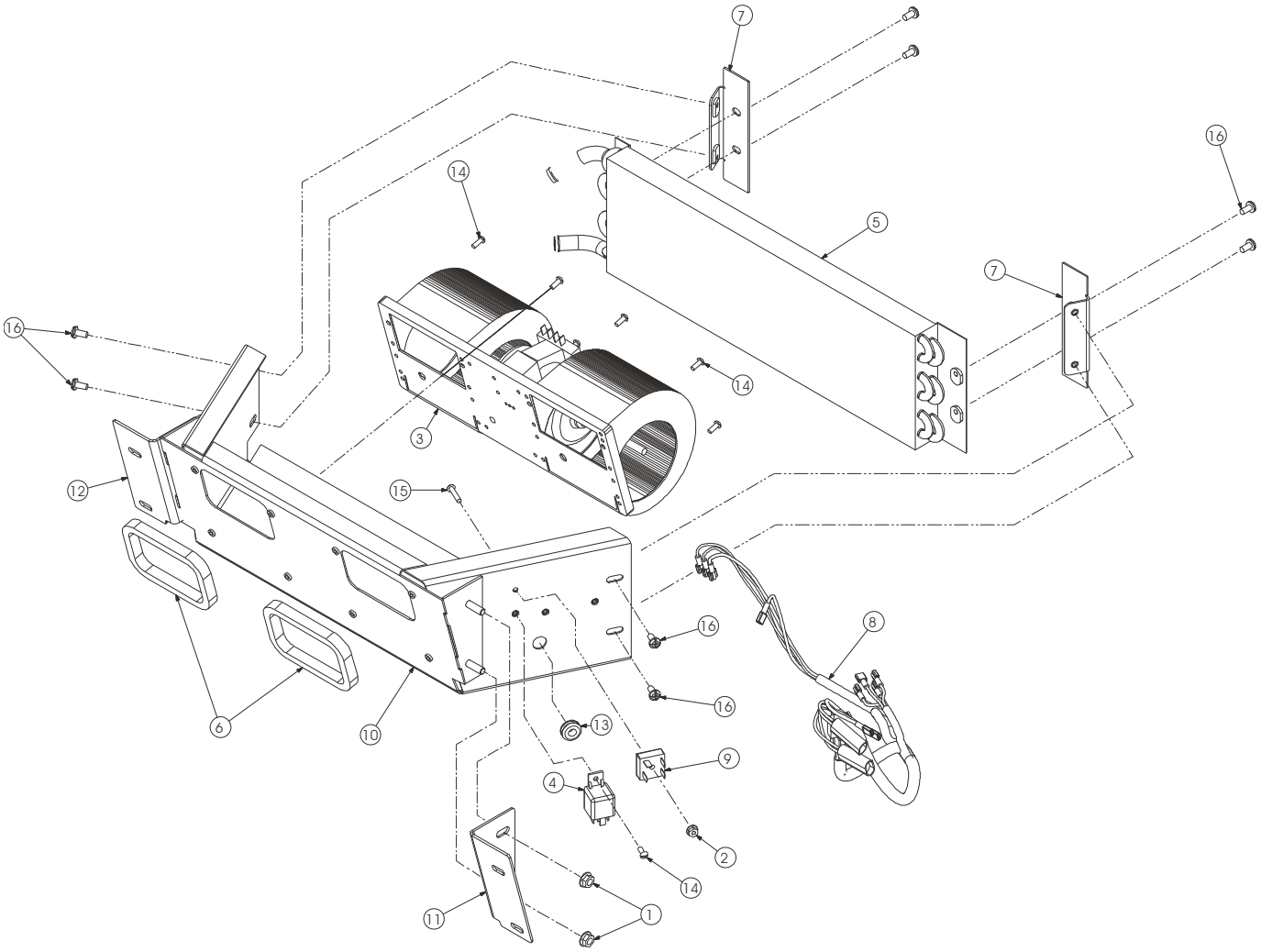

Ref No.	Part No.	Description	Qty.
	243007	ASSY/HEATER HOUSING	
1	131842	HN FL SLOC 5/16 C	4
2	137797	NUT/SERR FLANGE 10-24	1
3	186151	DOUBLE BLOWER XX40	1
4	242145	RELAY/SEALED	1
5	242477	CORE/HEATER	1
6	242478	FOAM/SEAL HVAC HOUSING	2
7	242842	FLANGE/CORE MT	2
8	242874	HARNESS/HVAC BOX	1
9	242875	RECTIFIER PACK	1
10	243383	WLDMT/BLOWER MOUNT	1
11	243385	BRKT/MTG HVAC HOUSING LH	1
12	243386	BRKT/MTG HVAC HOUSING RH	1
13	420-36134	GROMMET	1
14	650548	RHMS SLT #1024X1/2 CZY	9
15	651192	RHMS CR #1024X1 CZY	1
16	651307	PHMS CR 1/4X1/2 ZB	8

811277 Pre-Cleaner Kit

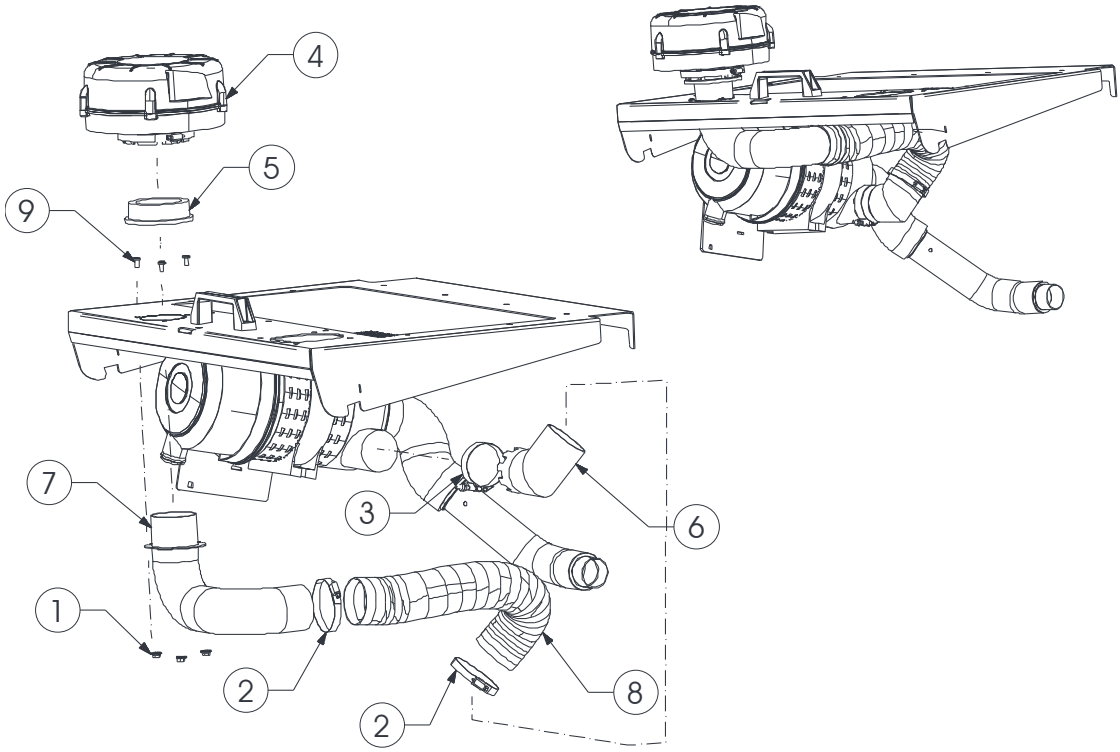

Ref No.	Part No.	Description	Qty.
	811277	KIT/PRE-CLEANER	
1	070634	HN LF SLOC 1/4 CZ	3
2	087849	CLAMP/HOSE #52	2
3	186906	CLAMP/T-BOLT 3.00	1
4	192587	PRECLEANER	1
5	192731	ADAPT/3.0-4.0/PRECLEANER	1
6	240138	PRECLEANER ELBOW	1
7	240140	WLMT/INTAKE/AIR	1
8	240306	HOSE/AIR INTAKE	1
9	651307	PHMS CR 1/4X1/2 ZB	3

811226 14-Pin Electrical Auxiliary Connector Kit

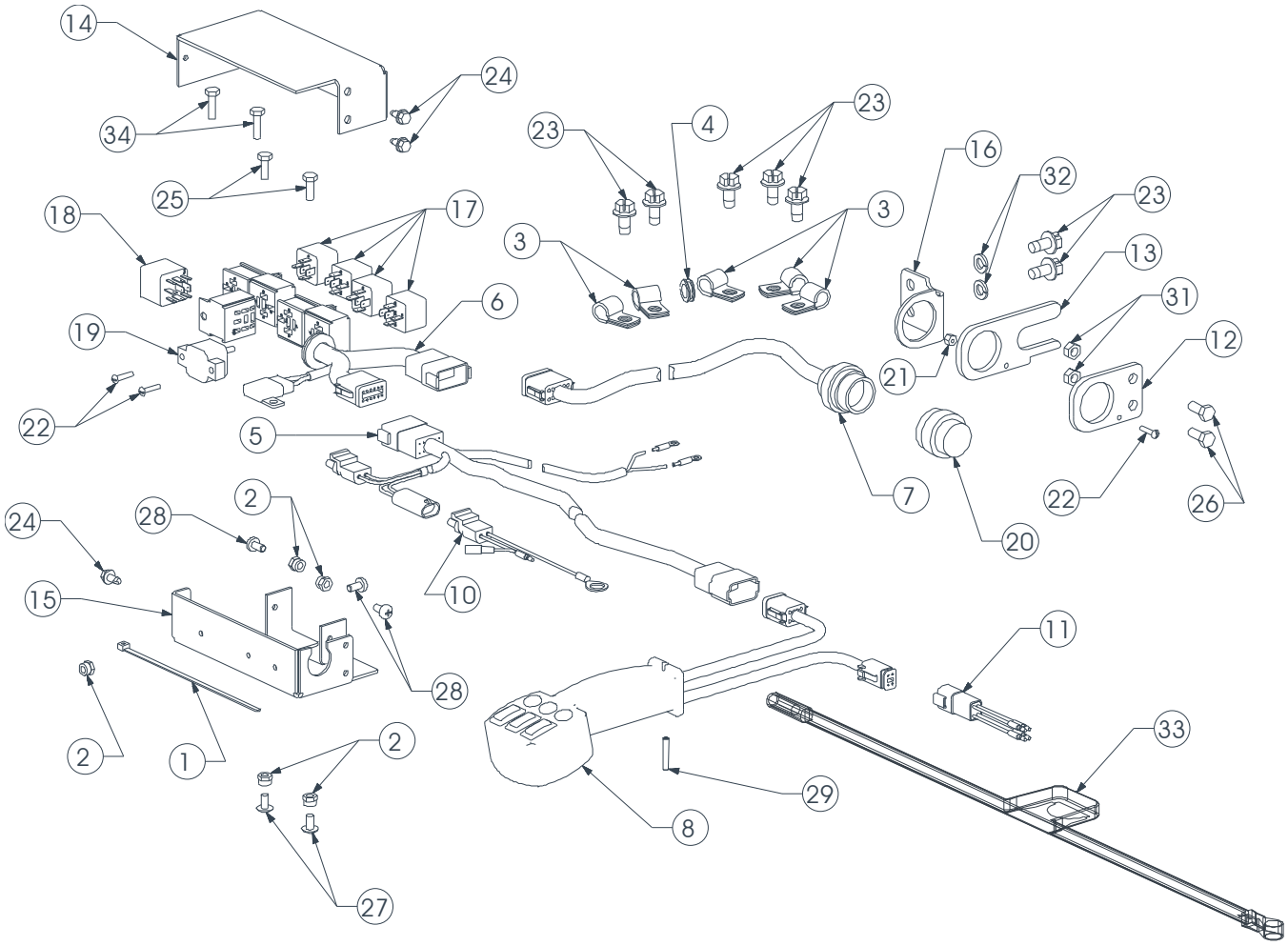

Ref. No.	Part No.	Description	Qty.
	811226	KIT/14-PIN ELEC AUX CONNECTOR	
1	055648	TIE/WIRE	20
2	071401	NUT/LOCK 1/4	5
3	076147	CLAMP/TUBE	5
4	138274	GROMMET/RUBBER	1
5	193828	HARNESS/14-PIN AUX	1
6	193831	HARNESS/RELAY BOX	1
7	193832	HARNESS/14-PIN CONNECTOR	1
8	193833	HANDLE/14-PIN AUX	1
10	193839 *	ADAPTER HARNESS/POWER	1
11	193844	ADAPTER HARNESS/HANDLE	1
12	193850	MOUNT/14-PIN CONNECTOR	1
13	193852	MOUNT/14-PIN CONNECTOR	1
14	193855	COVER/RELAY BOX	1
15	193857	CHASSIS/RELAY BOX	1
16	194136	MOUNT/14-PIN CONNECTOR	1
17	242144	RELAY	4
18	194146	DIODE BLOCK/8	1
19	194147	BREAKER 15 A	1
20	194507	DUST CAP W/ CHAIN	1
21	210-32183	NUT/HEX NYLON INSERT #8	1
22	310-32288	SCREW/ROUND #8 X 3/4	3
23	310-32411	SCREW/SELF-TAPPING 3/8 X 3/4	7
24	650315	SCREW/MACHINE 1/4 X 1	3
25	650448	SCREW/CAP 1/4 X 3/4	2
26	650486	SCREW/CAP 5/16 X 3/4	2
27	650943	SCREW/MACHINE 1/4 X ½	2
28	651307	SCREW/MACHINE 1/4 X ½	3
29	651467	PIN/ROLL M5 X 30MM	1
31	653007	NUT/HEX 5/16	2
32	654026	WASHER/LOCK 3/8	2
33	273181	FUSE/20 A INLINE	1
34	650835	SCREW/CAP 1/4 X 1	2

* Part used on track loaders only.

811496 Warning Lamp Kit

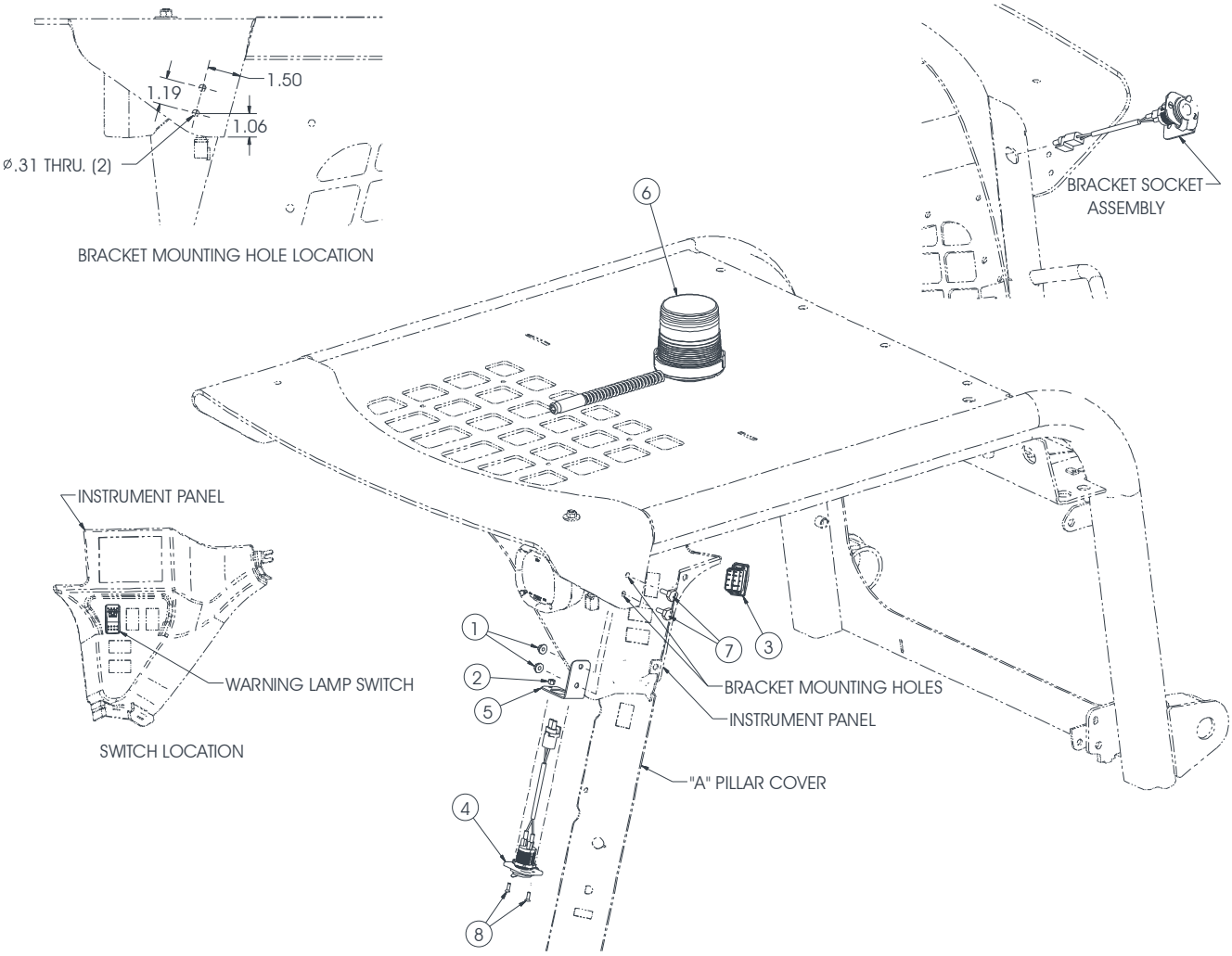

Ref No.	Part No.	Description	Qty.
	811496	KIT/WARNING LAMP	
1	134588	NUT/SPIRALOCK 1/4-20	2
2	210-32183	HN/NYLON INSERT #8-32 ZY	2
3	242326	SWITCH/WARNING LAMP	1
4	243376	SOCKET/12V	1
5	243378	BRKT/SOCKET MTG	1
6	197960	BEACON WITH BULB	1
7	650663	CS 1/4x5/8 C5ZY	2
8	651642	SCREW FCHM SLTD #832X1/2	2

811613 Rear Wiper Kit

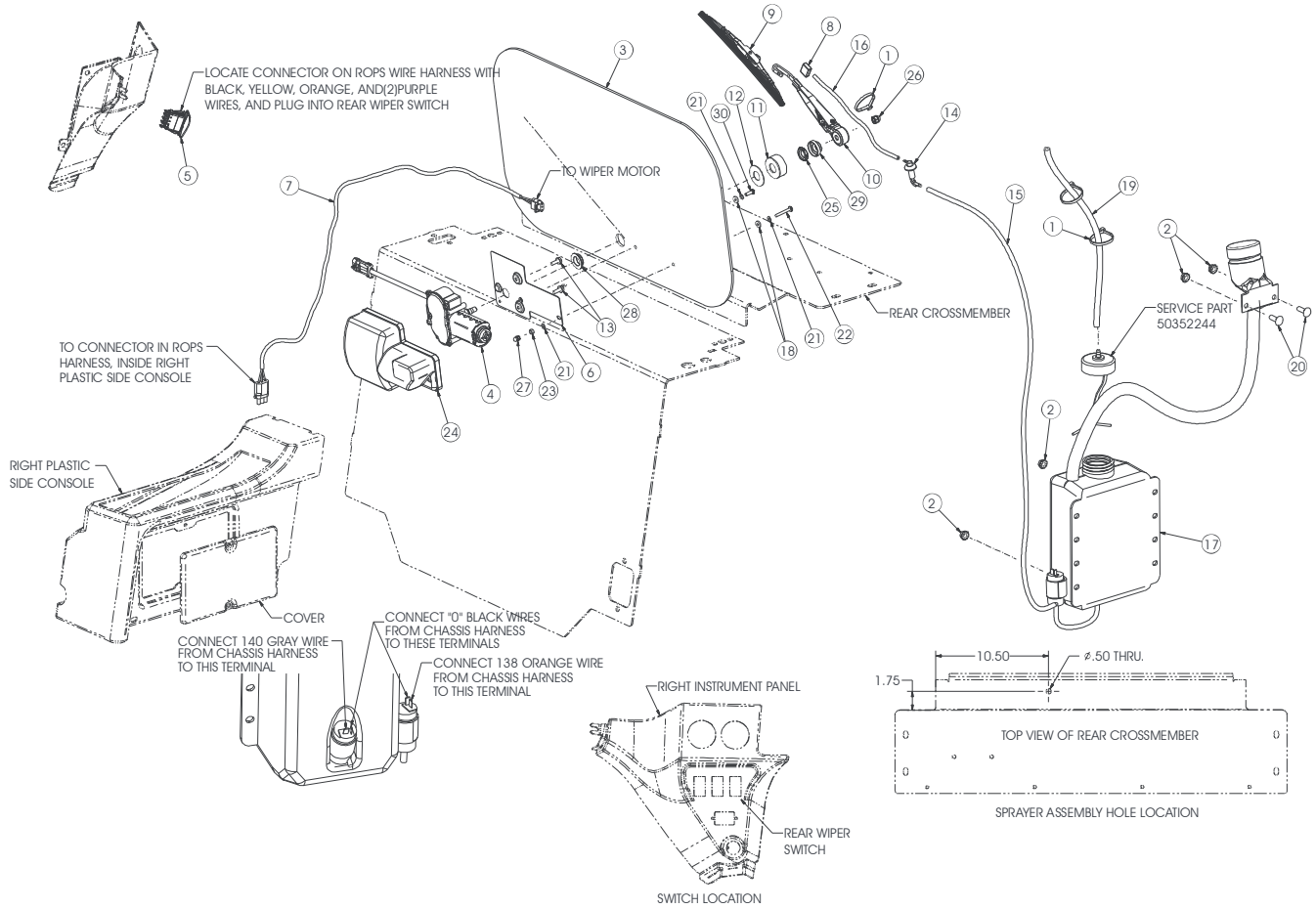

Ref No.	Part No.	Description	Qty.
	811613	KIT/REAR WIPER	
1	055648	TIE/CABLE .19X7.50 BLACK	3
2	210-19470	HN FL SLOC 5/16 CZY	4
3	240055	WINDOW/REAR	1
4	241900	MOTOR/REAR WIPER	1
5	242340	SWITCH/REAR WIPER-WASHER	1
6	242801	PLATE/MTG WIPER MOTOR	1
7	242867	WIPER HARNESS/REAR	1
8	242947	HEAD/SPRITZER	1
9	243452	BLADE/WIPER	1
10	243453	ARM/WIPER	1
11	50352710	SPACER/SHAFT	1
12	243456	WASHER/FIBER	1
13	243512	SCREW/TAPTITE M6	2
14	243516	SPRAYER ASS'Y	1
15	243520	HOSE/REAR WIPER WASHER	1
16	243530	HOSE/REAR WIPER ARM	1
17	243535	RESERVOIR/DUAL PUMP	1
	243061	PUMP/WASHER	2
	243062	FILL SPOUT/REMOTE	1
	243063	CAP/VENTED	1
	243536	HOSE/TANK TO PUMP	1
18	243546	WASHER/RUBBER #10	2
19	50352352	TUBE/BREATHER	1
20	650573	CB 5/16X1 C5ZY	2
21	651809	FW M5 ZB DIN125	3
22	651810	PHMS CR M5-0.8X35 CZB DI	1
23	656100	HN M5-0.8 C8 ZY DIN934	1
24	L500696	WIPER MOTOR COVER, PLAST	1
25	L500697	M18 NUT	1
26	L500700	M8 NUT / PANTO PLATE	1
27	L500706	M5 ACORN NUT	1
28	L500708	TOWER SEAL/TRICO WIPER	1
29	L500709	RAIN SHIELD	1
30	L500711	M5X16MM SCREW	1

811510 Flasher Kit

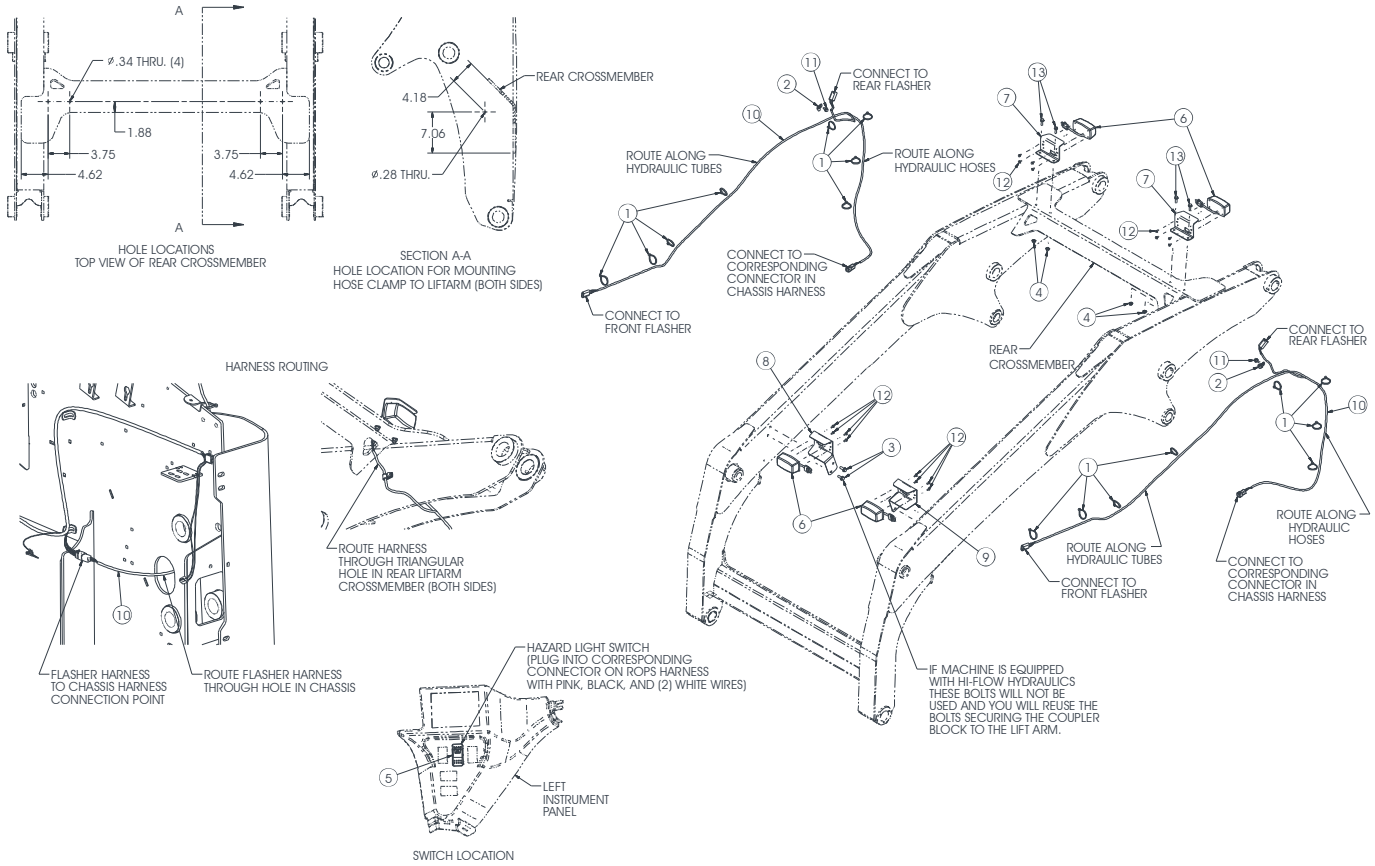

Ref No.	Part No.	Description	Qty.
	811510	KIT/FLASHER	
1	055648	TIE/CABLE .19X7.50 BLACK	16
2	076078	CLAMP/HOSE .38X.34 HOLE	2
3	076589	CS FL LOCK 3/8X1 C5ZY	2
4	210-19470	HN FL SLOC 5/16 CZY	4
5	242313	SWITCH/HAZARD (DOMESTIC)	1
6	242966	LIGHT/FLASHER	4
7	243569	LIGHT BRKT/FLASHER	2
8	243604	LIGHT BKRT/FLASHER RH	1
9	243611	LIGHT BKRT/FLASHER LH	1
10	243617	HARNESS/FLASHER	2
11	651648	HHTFS TAP/R 5/16X3/4 CZY	2
12	651650	HHTFS TAP/R 1032X1/2 CZY	16
13	651799	CS FL 5/16X1 C5ZY	4

184130 Auxiliary Coupler Service Kits
(184130 has been replaced by 50352739)

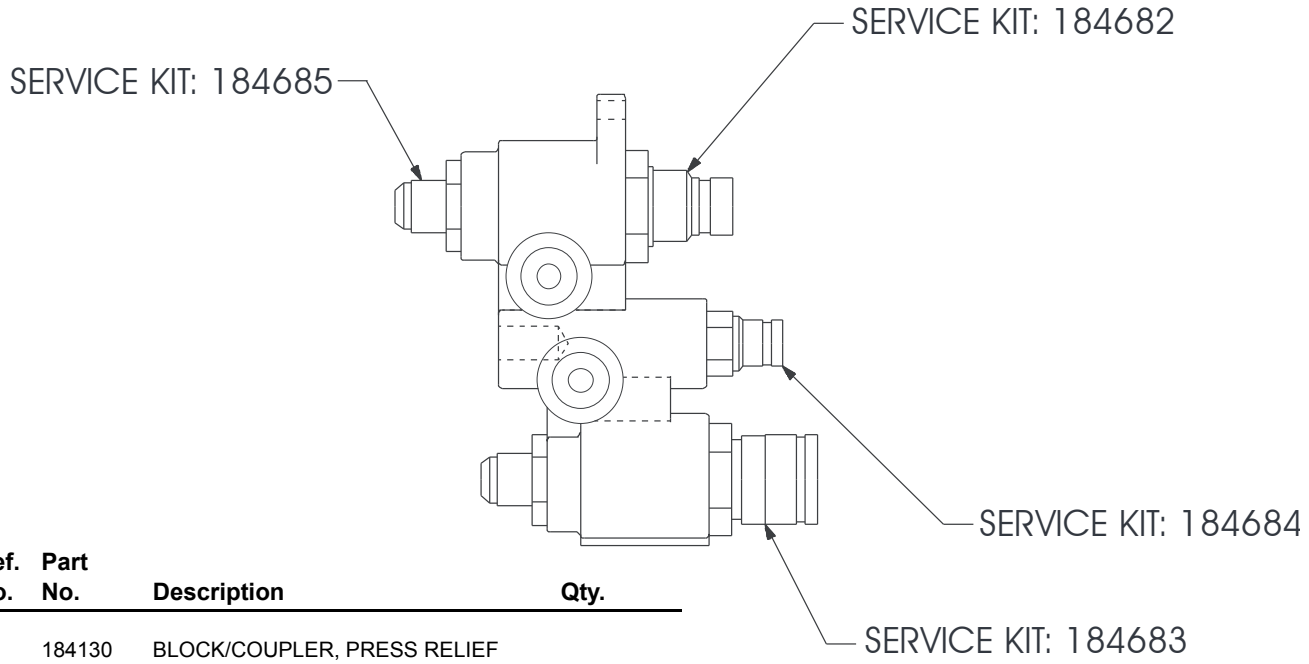

Ref. No.	Part No.	Description	Qty.
	184130	BLOCK/COUPLER, PRESS RELIEF	
	184682	KIT/SERVICE MALE QUICK-COUPLER	1
	184683	KIT/SERVICE FEMALE QUICK-COUPLER	1
	184684	KIT/SERVICE RETURN QUICK-COUPLER	1
	184685	KIT/SERVICE 3/4 SAE FITTING	1

50352739 Auxiliary Coupler Service Kits

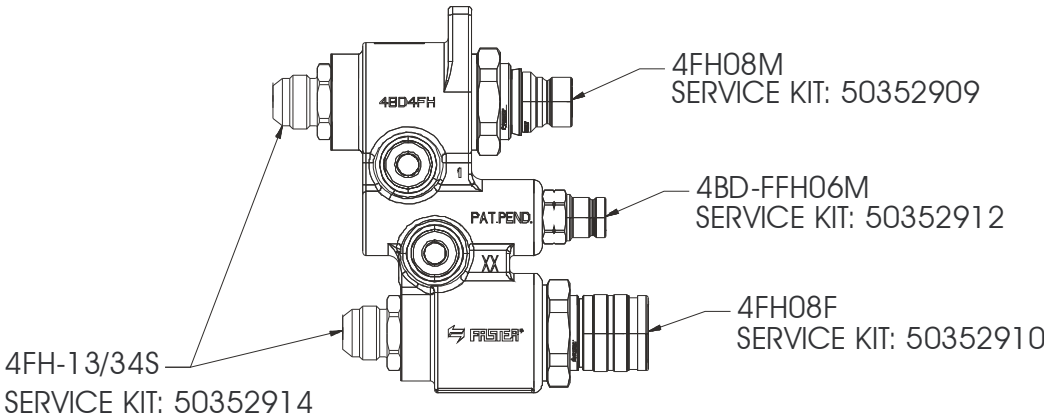

Ref. No.	Part No.	Description	Qty.
	50352739	BLOCK/COUPLER PRESS RELIEF	
	50352909	KIT/SERVICE MALE QUICK-COUPLER	1
	50352910	KIT/SERVICE FEMALE QUICK-COUPLER	1
	50352912	KIT/SERVICE RETURN QUICK-COUPLER	1
	50352914	KIT/SERVICE 3/4 SAE FITTING	1

811537 Power-A-Tach® Kit

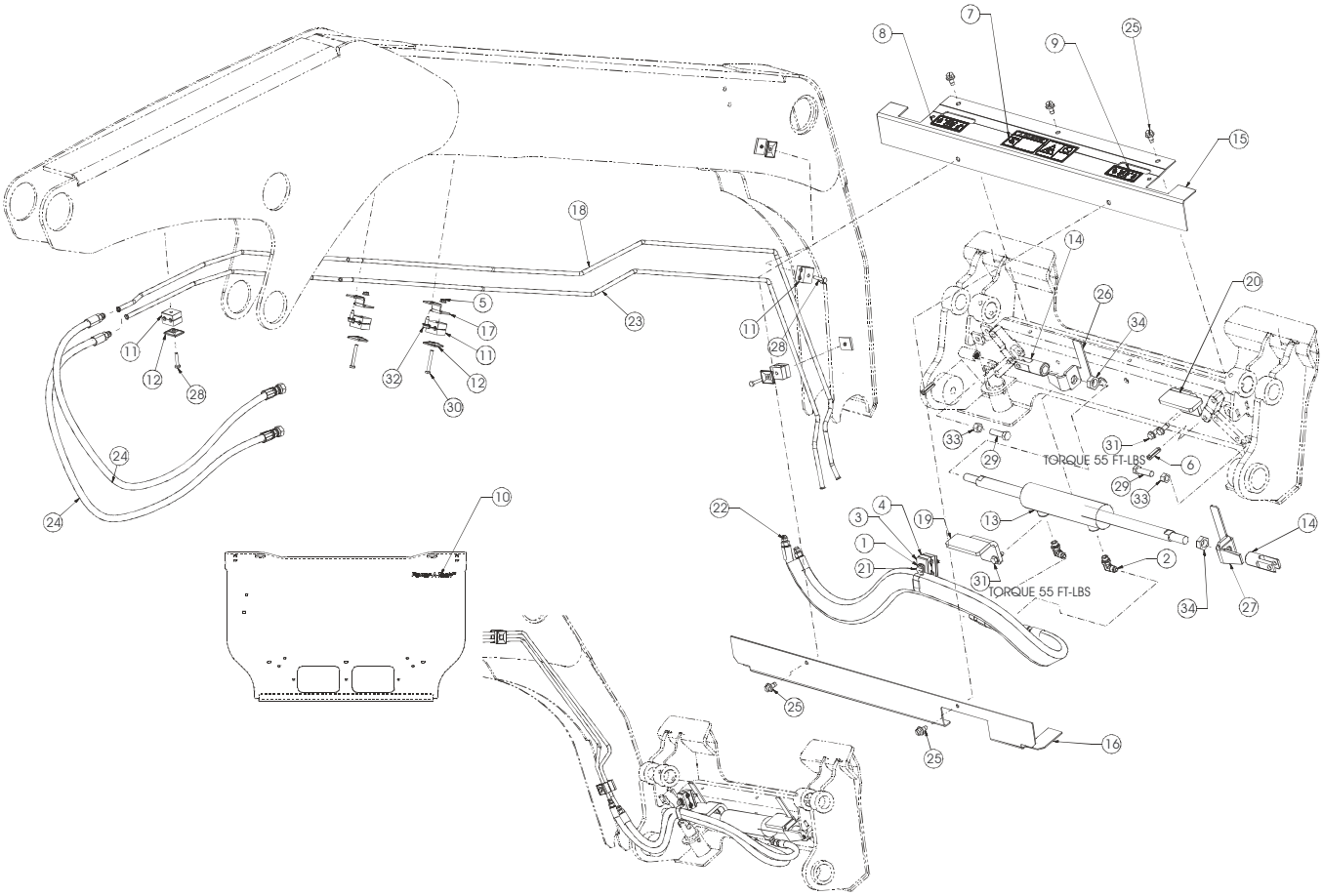

Ref. No.	Part No.	Description	Qty.
	811537	KIT/POWER-A-TACH	
1	055021	CLAMP/HOSE .75X.41 HOLE	1
2	068938	90 MJ06-MAORB06	2
3	079098	PLATE/TOP SIZE 2 TWIN FL	2
4	088904	CLAMP/TUBE .50 TWIN	1
5	134588	NUT/SPIRALOCK 1/4-20	2
6	137387	PIN/SPRING	2
7	139101	DECAL-POWER ALL-TACH	1
8	139107	DECAL-LATCHING (LEFT)	1
9	139109	DECAL-LATCHING (RH)	1
10	184357	DECAL/POWER-A-TACH	1
11	194309	CLAMP/TUBE .38 TWIN	5
12	194380	PLATE/TOP SIZE 1 TWIN	5
13	241701	CYLINDER/HYD POWER F-A-T	1
14	241711	LINK/SPRING SLIDE	2
15	241720	COVER/CYLINDER/UPPER	1
16	241721	COVER/CYLINDER/LOWER	1
17	242767	BRKT/MTG/TUBE	2
18	50353710	TUBE/ALLTACH/LIFTARM	1
19	243409	BRKT/STOP	1
20	243415	BRKT/STOP	1
21	244572	HWHTFS 5/16X2-3/4	1
22	244574	ASSY/ HOSE/SLEEVE	1
23	50353711	TUBE/ALLTACH/POWER	1
24	272688	HOSE/ALLTACH	2
25	310-32411	Screw Self Tapping3/8-16	5
26	50350107	FLAG/LH/WLDMT	1
27	50350108	FLAG/RH/WLDMT	1
28	650426	CS 1/4X1-1/4 C5ZY	3
29	650569	CS 1/2X1-3/4 C5ZY	2
30	650706	CS 1/4X2 C5ZY	2
31	650934	THWH TC USL 3/8X1 CZY	4
32	651648	HHTFS TAP/R 5/16X3/4 CZY	2
33	653018	HN 1/2 C2ZY	2
34	653053	HJN 3/4 F2ZY	2

811537 Power-A-Tach® Kit

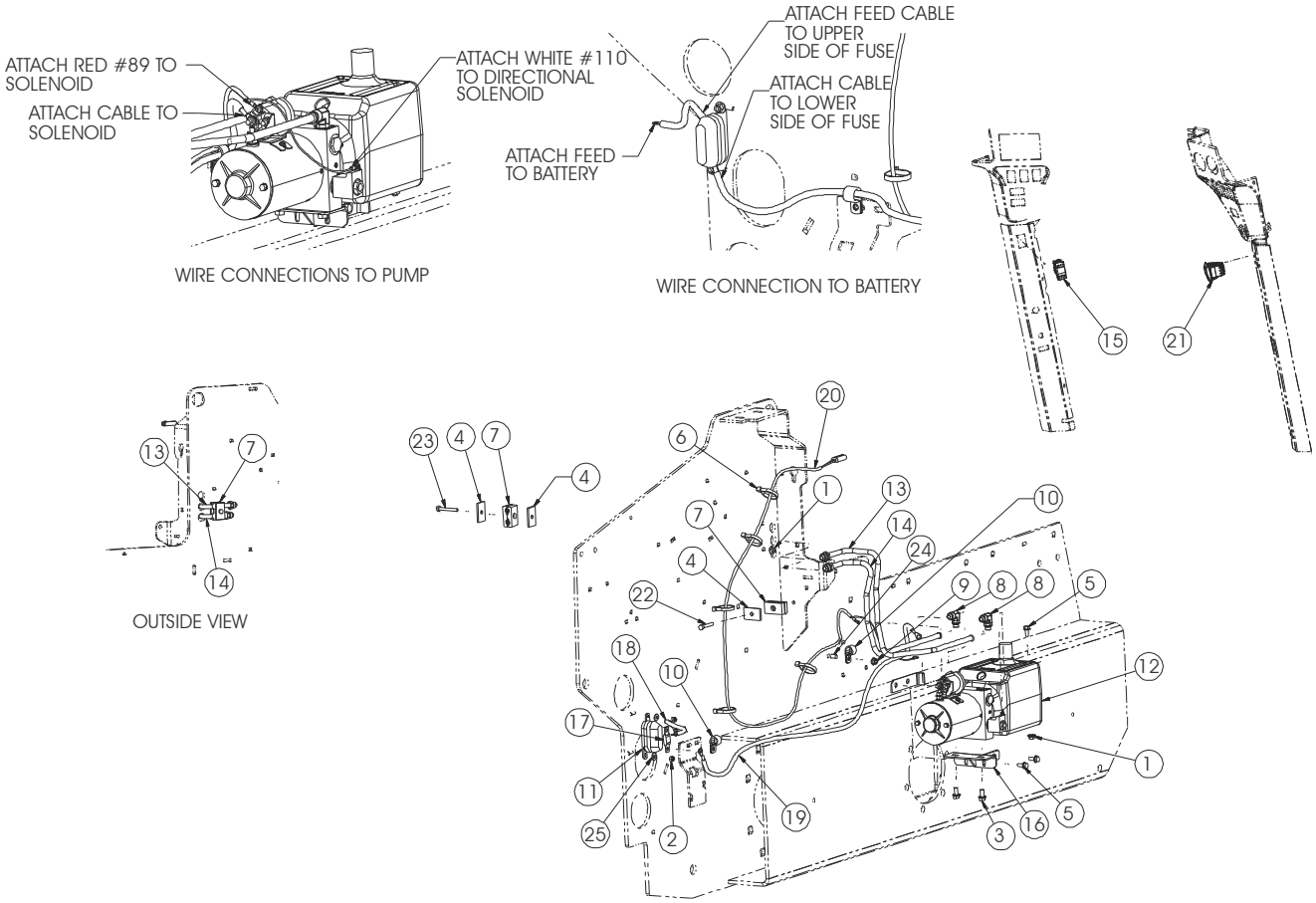

Ref. No.	Part No.	Description	Qty.
	811537	KIT/POWER-A-TACH	
1	070648	HN LF SLOC 5/16 CZ	3
2	071401	HLN INST 1/4 CZY	2
3	076588	CS FL LOCK 3/8X3/4 C5ZY	2
4	079098	PLATE/TOP SIZE 2 TWIN FL	3
5	081380	CS FL LOCK 5/16X3/4 C5ZY	3
6	088467	TIE/CABLE .30X14.50 BLAC	5
7	088904	CLAMP/TUBE .50 TWIN	2
8	114824	90 MJ08-MAORB06	2
9	134852	NUT/SPIRALOCK 3/8-16	1
10	136226	CLAMP/HOSE .75X.41 HOLE	2
11	191192	HOLDER/FUSE/AMG	1
12	242617	UNIT/POWER/HYD	1
13	242707	TUBE/ALLTACH/RT	1
14	242708	TUBE/ALLTACH/LEFT	1
15	242752	SWITCH/PWR ALL-TACH	1
16	243080	WLMT/MTG/PUMP	1
17	243083	FUSE/175AMP/AMG	1
18	243100	CABLE/4GA/7.50	1
19	243104	CABLE/4GA/51.00	1
20	243107	HARNESS/ALL-TACH/CHASSIS	1
21	243567	SWITCH/PWR ALL-TACH	1
22	650568	CS 5/16X2 C5ZY	1
23	650725	CS 5/16X2-1/4 C5ZY	1
24	651067	CB SN 3/8X1 C5ZY	1
25	654002	FW 1/4 AWZY	2

811644 Parking Brake Release Kit

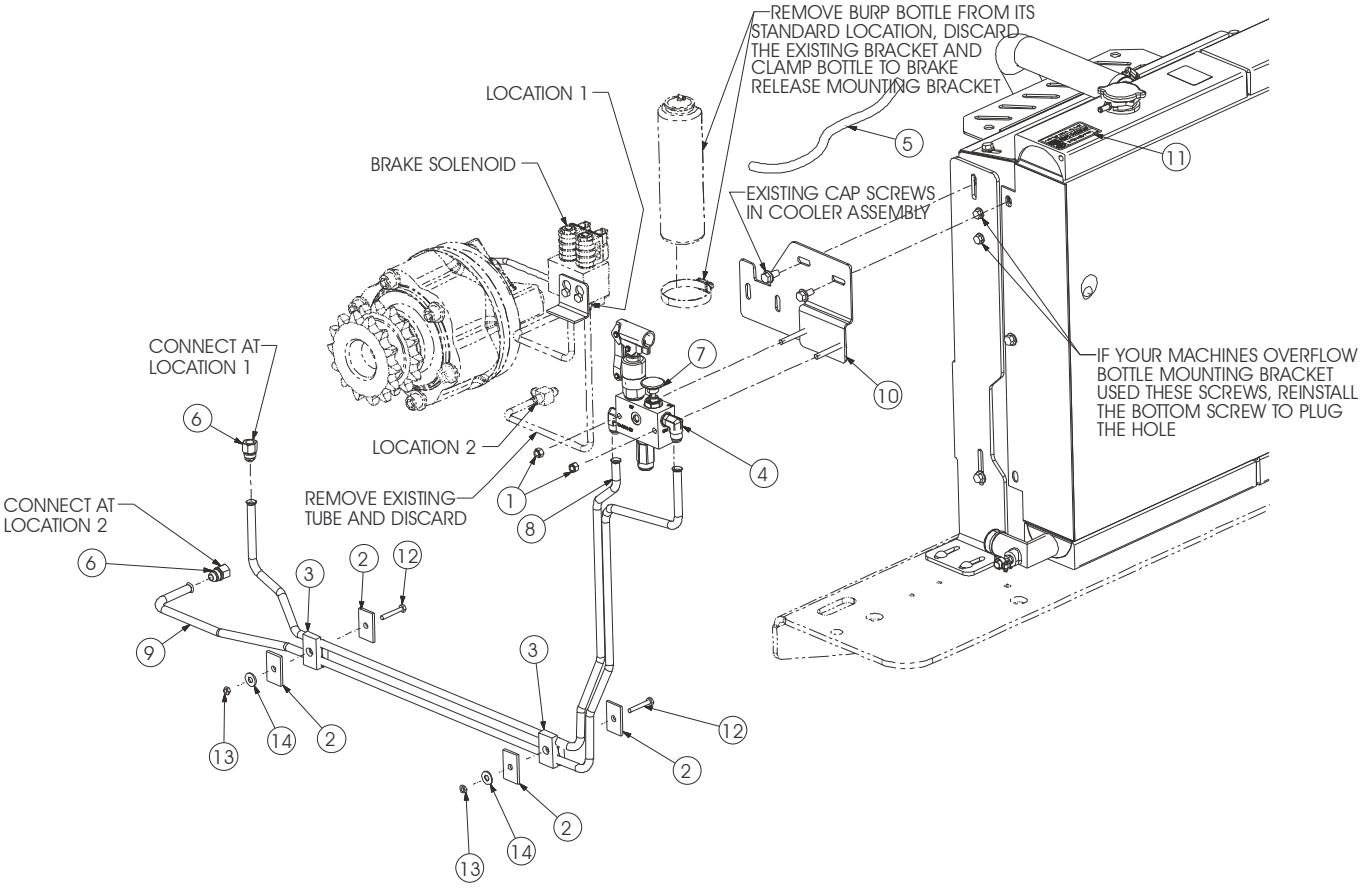

Ref. No.	Part No.	Description	Qty.
	811644	KIT/PARKING BRAKE RELEASE	
1	064260	HLN INST 5/16 CZY	2
2	079098	PLATE/TOP SIZE 2 TWIN FL	4
3	088904	CLAMP/TUBE .50 TWIN	2
4	114824	90 MJ08-MAORB06	2
5	187474	HOSE-FUEL 5/16 X 15	1
6	192178	REDUCER FJ06-MJ08	2
7	242517	VALVE/BRAKE RELEASE	1
8	243893	TUBE/HYD BRAKE RELEASE	1
9	243895	TUBE/HYD BRAKE RELEASE	1
10	243898	BRKT/BRAKE RELEASE VALVE	1
11	272760	DECAL/PARK BRAKE RELEASE	1
12	650419	CS 1/4X1-3/4 C5ZY	2
13	651270	HJN 1/4 C2ZY	2
14	654004	FW 5/16 AWZY	2

811497 Four-Point Lift Kit

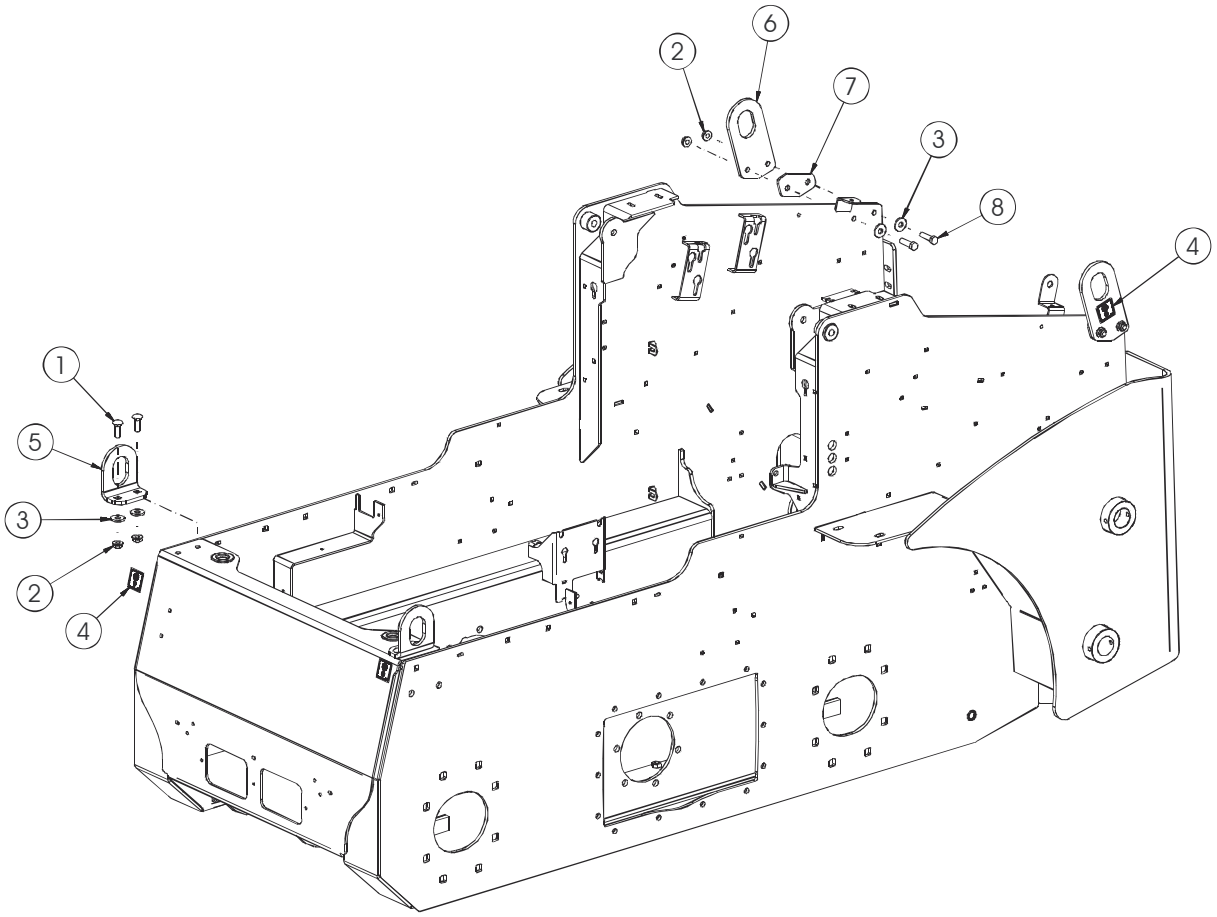

Ref No.	Part No.	Description	Qty.
	811497	KIT/FOUR-POINT LIFT	
1	030-31934	CB 1/2X1-1/2 C8ZY	4
2	134853	NUT/SPIRALOCK 1/2-13	8
3	134966	FW 1/2 HT	8
4	137718	DECAL/LIFT HOOK	4
5	243548	LIFT EYE/FOUR POINT	2
6	243549	LIFT EYE/FOUR POINT	2
7	243550	PLATE/SPACER	2
8	651366	CS 1/2X1-3/4 C8Z	4

811625 Self-Leveling Valve Kit
V270 Models: SN 021600 and Before

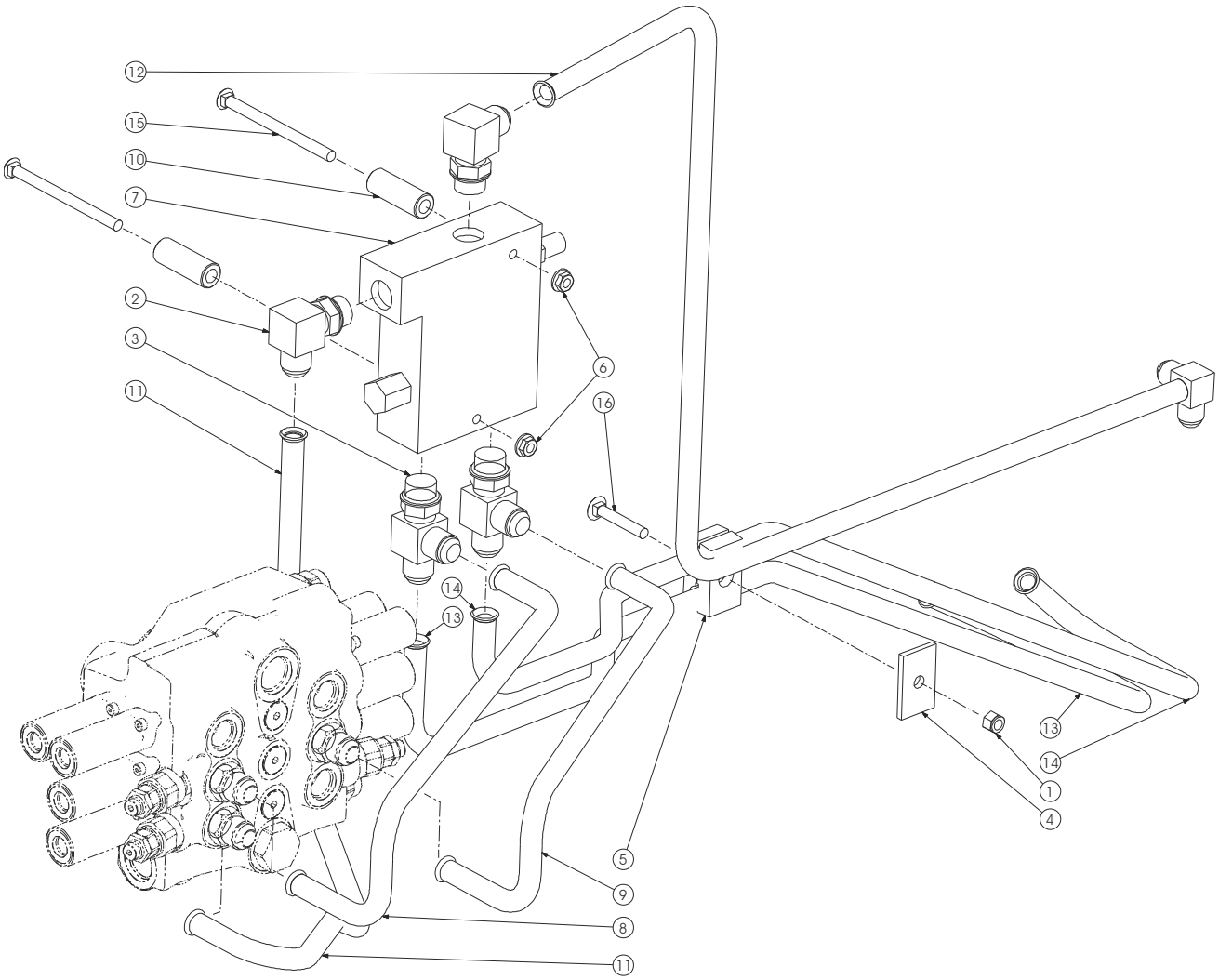

Ref No.	Part No.	Description	Qty.
	811625	KIT/SELF-LEVELING VALVE	
1	064260	NUT/HEX LOCK 5/16	1
2	067761	FITTING/90° SAE10 X JIC10	2
3	072807	FITTING/TEE JIC10 X SAE10 X JIC10	2
4	079098	PLATE/TWIN COVER	1
5	079126	CLAMP/TUBE 5/8	1
6	131842	NUT/SPIRALOCK™ 5/16	2
7	135367	VALVE/SELF LEVEL	1
8	191549	TUBE/TILT	1
9	191553	TUBE/TILT	1
10	191763	SPACER 3/4 OD X .406 ID	2
11	193486	TUBE/LIFT	1
12	240732	TUBE/LIFT	1
13	241653	TUBE/TILT	1
14	241655	TUBE/TILT	1
15	651688	BOLT/CARRIAGE 5/16 X 4-1/2	2
16	652036	BOLT/CARRIAGE 5/16 X 2	1

50850001Counterweight Kit
V270 Models: SN 021601 and Up

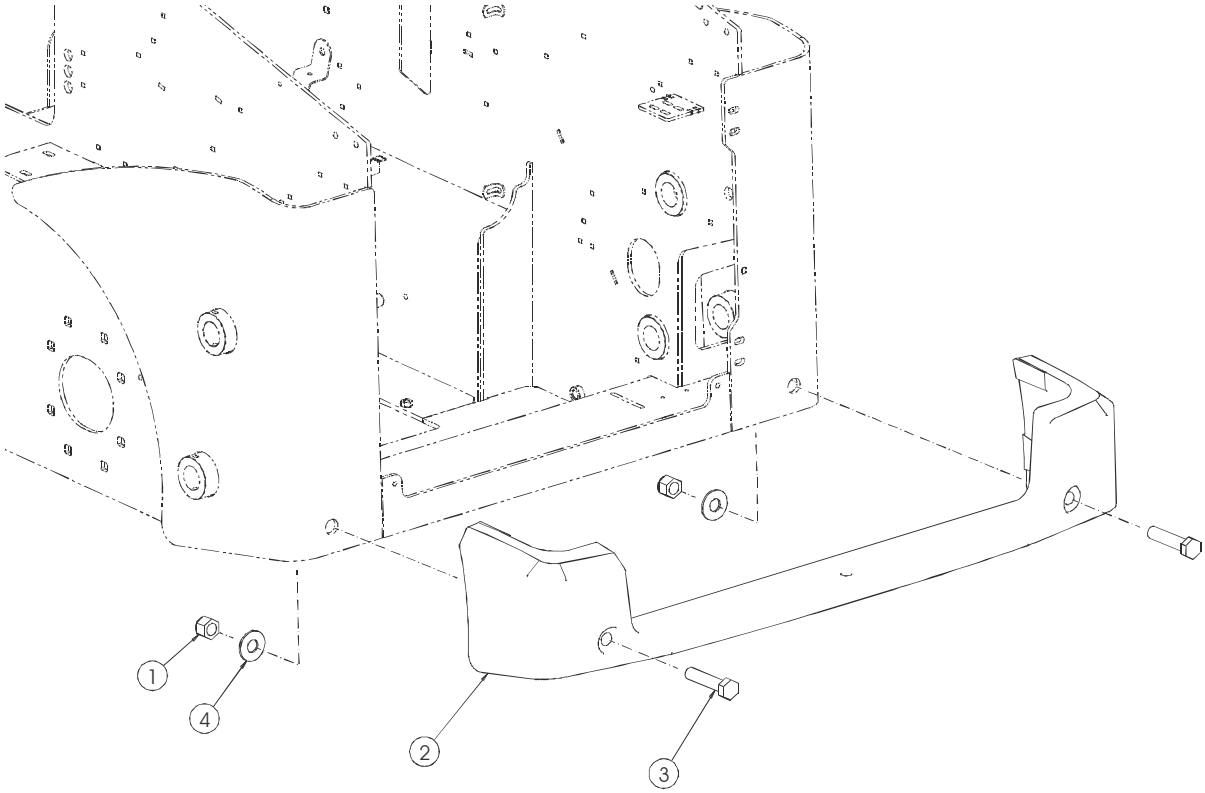

Ref No.	Part No.	Description	Qty.
	50850001	KIT/COUNTERWEIGHT	
1	132681	HLN INST 1 CZY	2
2	244322	COUNTERWEIGHT/CAST	1
3	651816	CS 1X4-1/2 C5ZY	2
4	654016	FW 1 AWZY	2

50850048 Single-Point Lift Kit

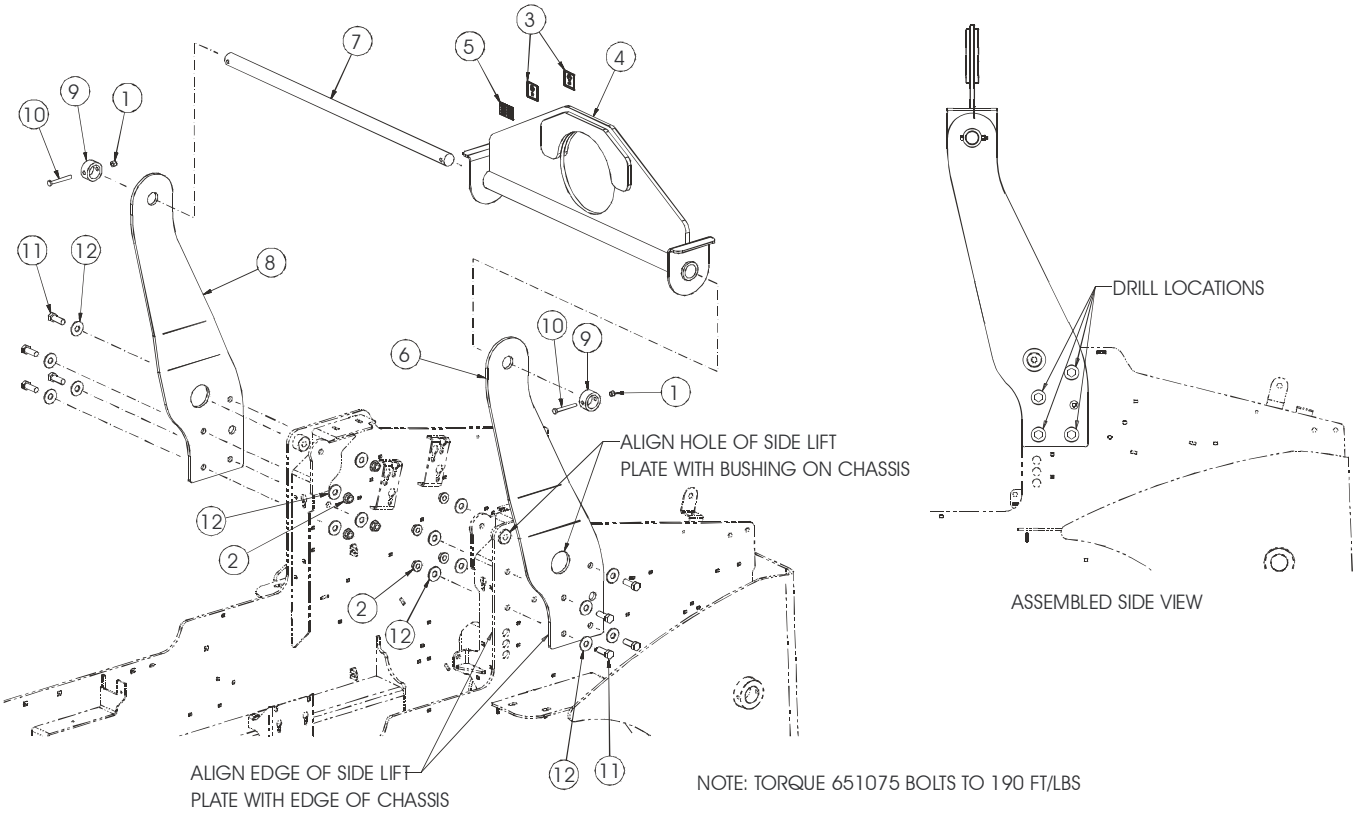

Ref No.	Part No.	Description	Qty. Req'd
	50850048	KIT/SINGLE-POINT LIFT	
1	067847	HLN INST 3/8 CZY	2
2	136601	SPC/SPIRALOCK 5/8-11	8
3	137718	DECAL/LIFT HOOK	2
4	138662	ASSY/HOOK	1
5	139355	DECAL/NAME PLATE	1
6	245205	PLATE/SIDE LIFT LH	1
7	245207	ROD/LIFT SUPPORT	1
8	50350077	PLATE/SIDE LIFT RH	1
9	50350078	TUBE/LOCKING	2
10	650818	CS 3/8X3 C5ZY	2
11	651075	CS 5/8X1-3/4 C8	8
12	654012	FW 5/8 AWZY	16

50850116 Impact-Resistant Door Kit

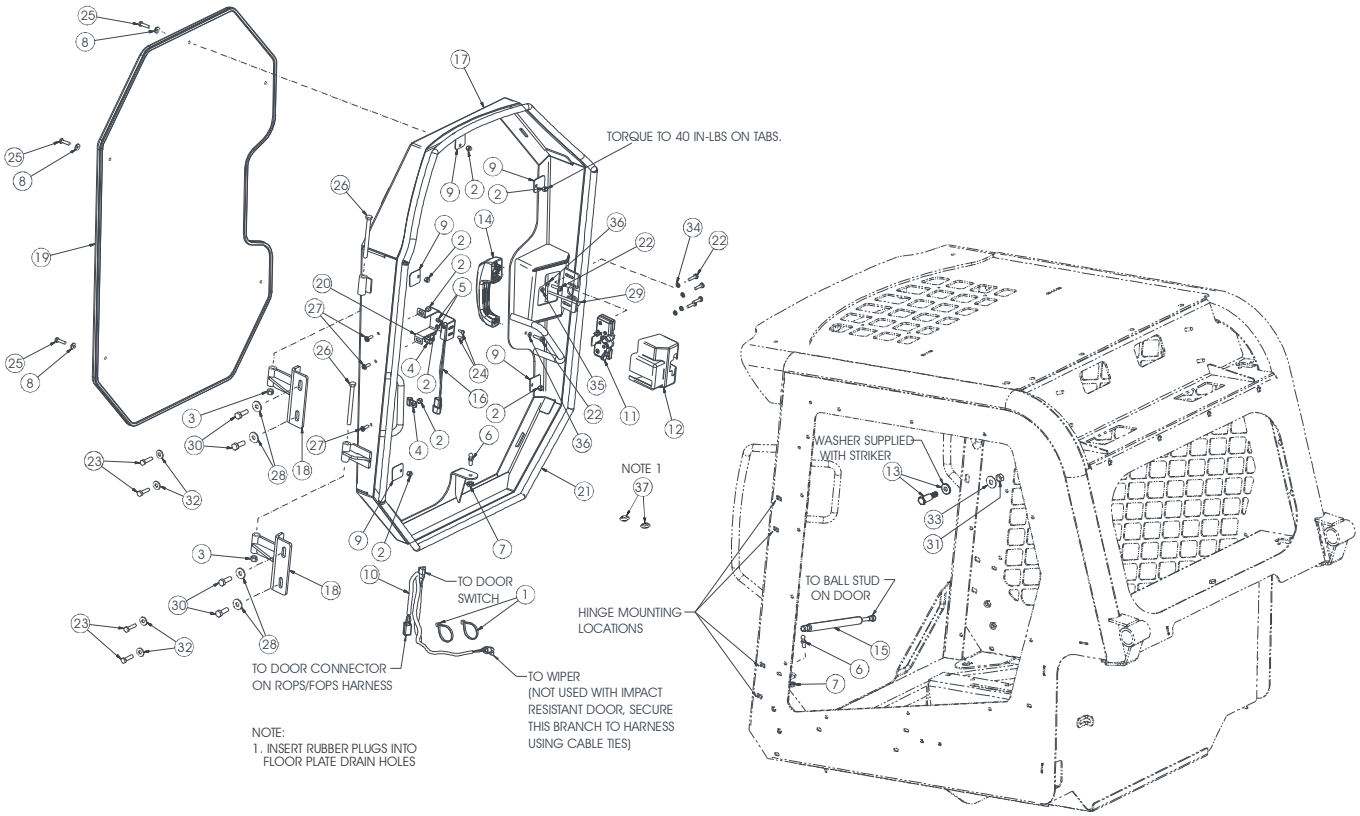

Ref No.	Part No.	Description	Qty. Req'd
	50850116	KIT/IMPACT-RESISTANT DOOR	
1	055648	TIE/CABLE .19X7.50 BLACK	2
2	071401	HLN INST 1/4 CZY	8
3	071703	LN 3/8 CBZY	2
4	076078	CLAMP/HOSE .38X.34 HOLE	2
5	084174	HLN INST #1224 CZY	2
6	122485	STUD/BALL 10MM	2
7	131842	HN FL SLOC 5/16 C	2
8	137462	WASHER 1/4 SEALING	5
9	187405	TAB/ LEXAN DOOR	5
10	242866	HARNESS/DOOR V2700V	1
11	242927	LATCH/DOOR	1
12	242928	COVER/LATCH	1
13	242930	STRIKER	1
14	242932	HANDLE ASS'Y	1
15	242942	SPRING/GAS	1
16	244668	SENSOR/PROXIMITY	1
17	245260	FRAME/DOOR WLDMNT	1
18	50350139	HINGE/CABSIDE WDLMNT	2
19	50350159	PANEL/IMPACT	1
20	50350300	SENSOR/PROXIMITY BRKT	1
21	50350313	SEAL/BULB	1
22	50657011	PHMS CR M6-1.0X25 CZ DIN	6
23	650545	CS 5/16X1-1/4 C5ZY	4
24	650812	RHMS SLT #1224X1/2 CZY	2
25	650835	CS 1/4X1 C5ZY	5
26	650851	CS 3/8X4-1/2 C5ZY	2
27	651308	PHMS CR 1/4X3/4 ZB	3
28	651659	FW M10 HARDENED Z	4
29	651752	CS M6-1.00x100 C8.8 ZY D	1
30	651821	CS M10-1.5x30 C8.8 ZB DI	4
31	653015	HN 7/16 C2ZY	1
32	654004	FW 5/16 AWZY	4
33	654046	FW 7/16 AWZY	1
34	654052	LW INT T 1/4 AZY	4
35	656047	HN M6-1 C8 ZY DIN934	1
36	656179	FW M6 ZY DIN125	2
37	192182	PLUG/RUBBER	2

SECTION NOTES

SECTION D: SCHEMATICS

Heater Schematic 193
HVAC Schematic 195
14-Pin Electrical Auxiliary Schematic 197
Electrical Schematic - Engine 198
Rear Light Power Distribution Schematic 199
Electrical Schematic - ROPS/FOPS 200
Electrical Schematic - Chassis 201
Hydrostatic/Hydraulic Schematic - Dual Joystick Controls 203
Hydrostatic/Hydraulic Schematic - Hand and Foot Controls 204

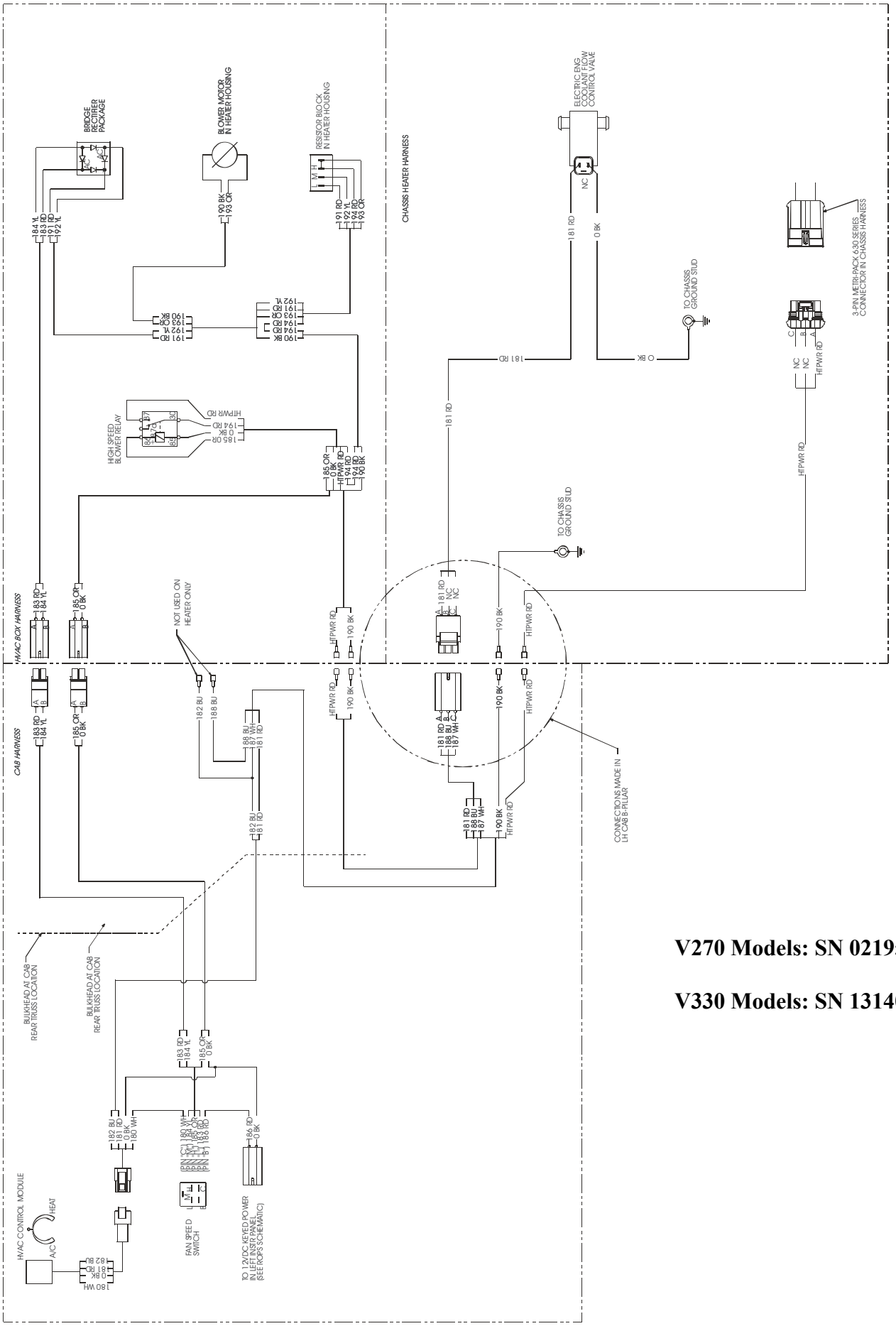

V270 Models: SN 021951 and Up

V330 Models: SN 131401 and Up

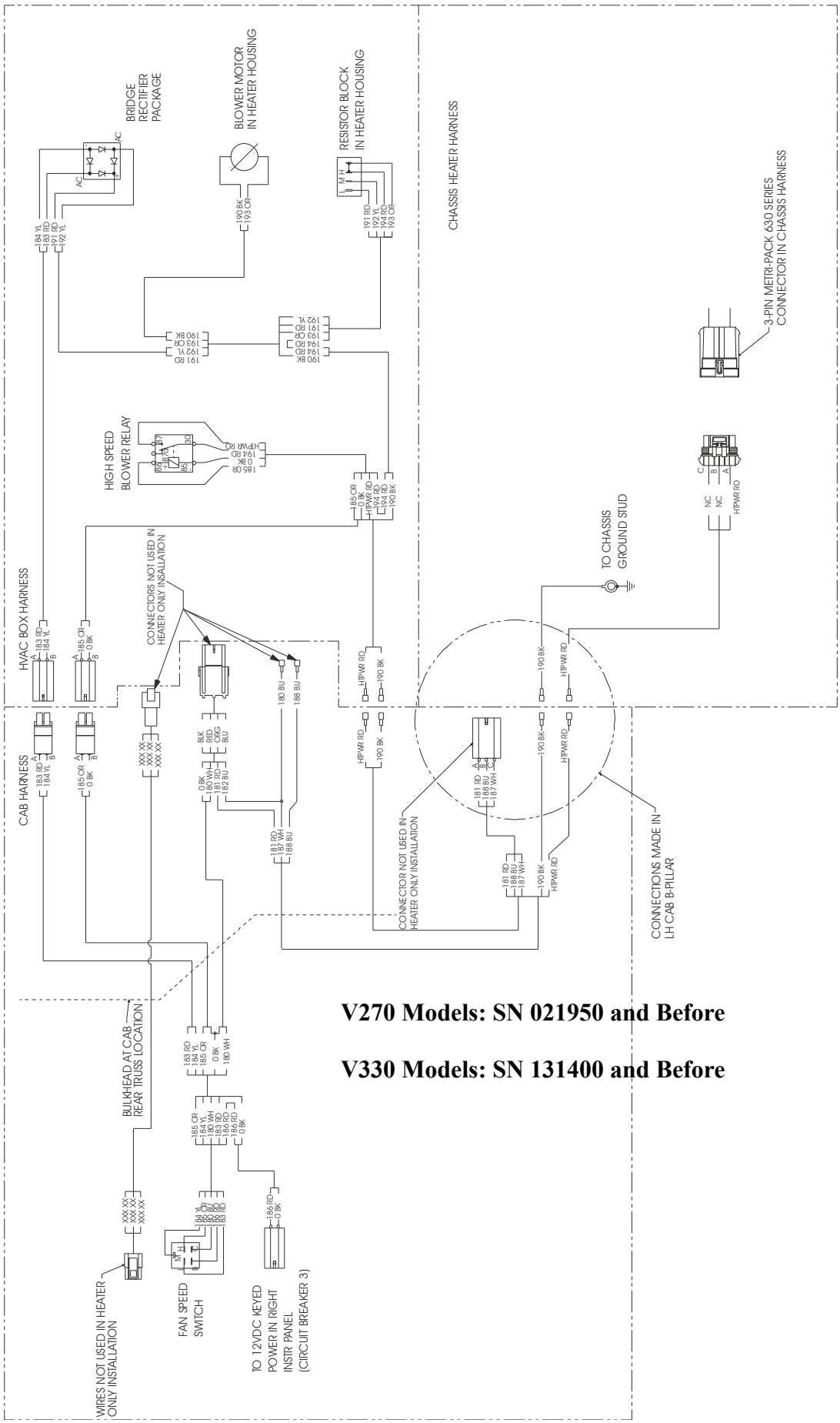
BRIDGE RECTIFIER PACKAGE
BLOWER MOTOR IN HEATER HOUSING
RESISTOR BLOCK IN HEATER HOUSING
CHASSIS HEATER HARNESS
3-PIN METRI-PACK 630 SERIES CONNECTOR IN CHASSIS HARNESS
HIGH SPEED BLOWER RELAY
TO CHASSIS GROUND STUD
HVAC BOX HARNESS
CONNECTORS NOT USED IN HEATER ONLY INSTALLATION
CAB HARNESS
CONNECTOR NOT USED IN HEATER ONLY INSTALLATION
CONNECTIONS MADE IN LH CAB B-PILLAR
BULKHEAD AT CAB REAR TRUSS LOCATION
WIRES NOT USED IN HEATER ONLY INSTALLATION
FAN SPEED SWITCH
TO 12VDC KEYED POWER IN RIGHT INSTR PANEL (CIRCUIT BREAKER 3)
V270 Models: SN 021950 and Before
V330 Models: SN 131400 and Before

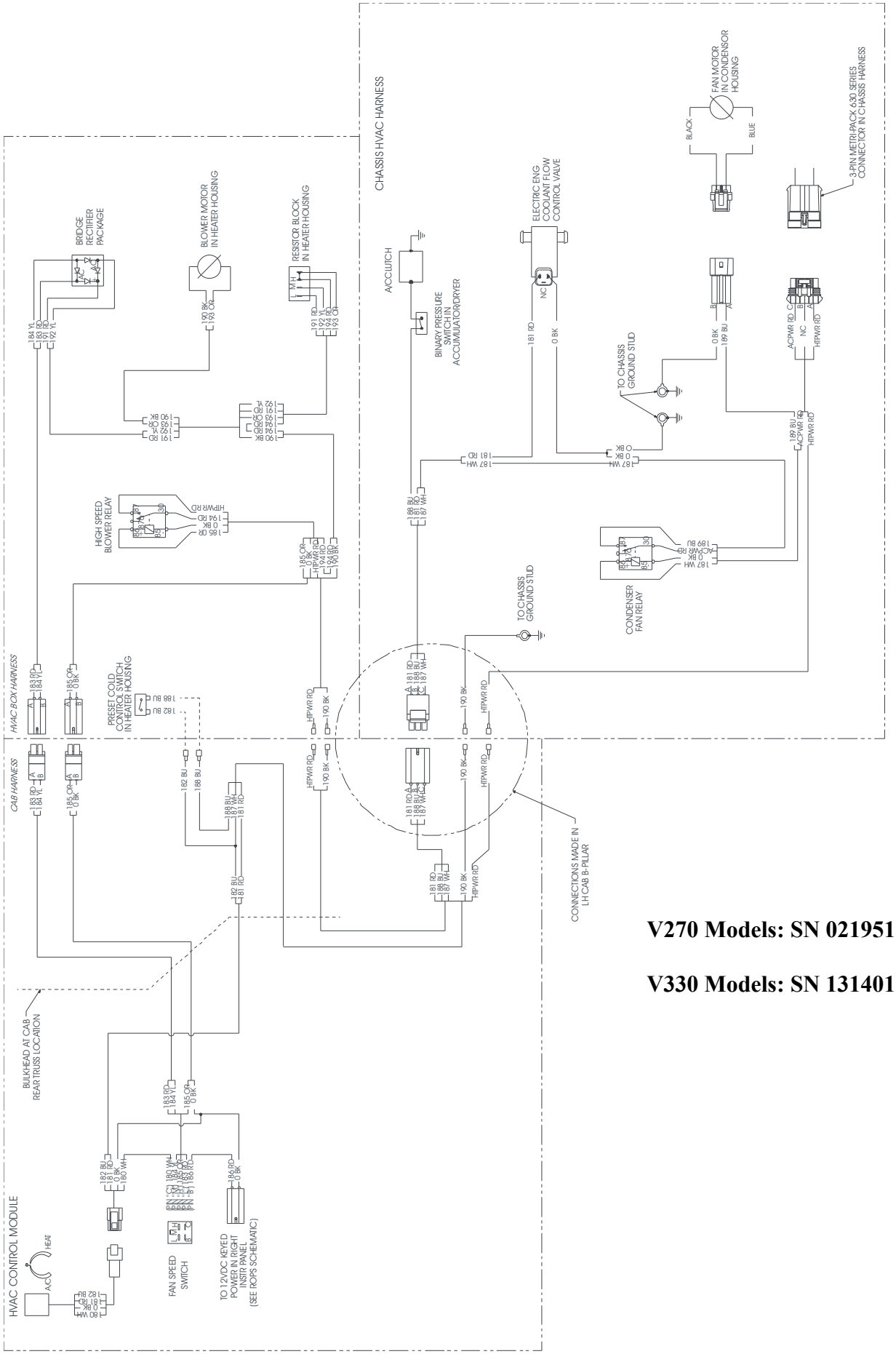

V270 Models: SN 021951 and Up

V330 Models: SN 131401 and Up

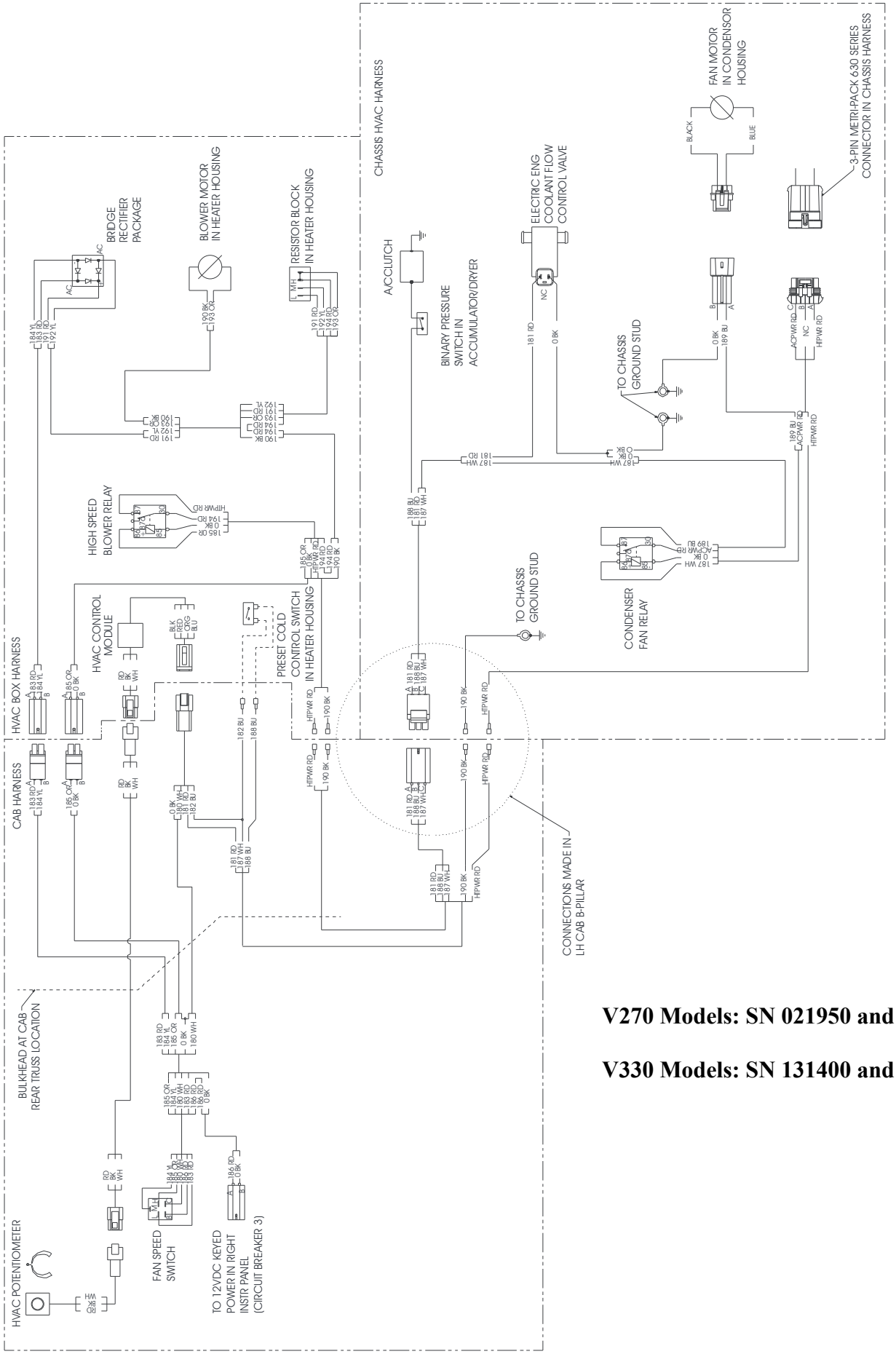

V270 Models: SN 021950 and Before

V330 Models: SN 131400 and Before

14-PIN ELECTRICAL AUXILIARY SCHEMATIC

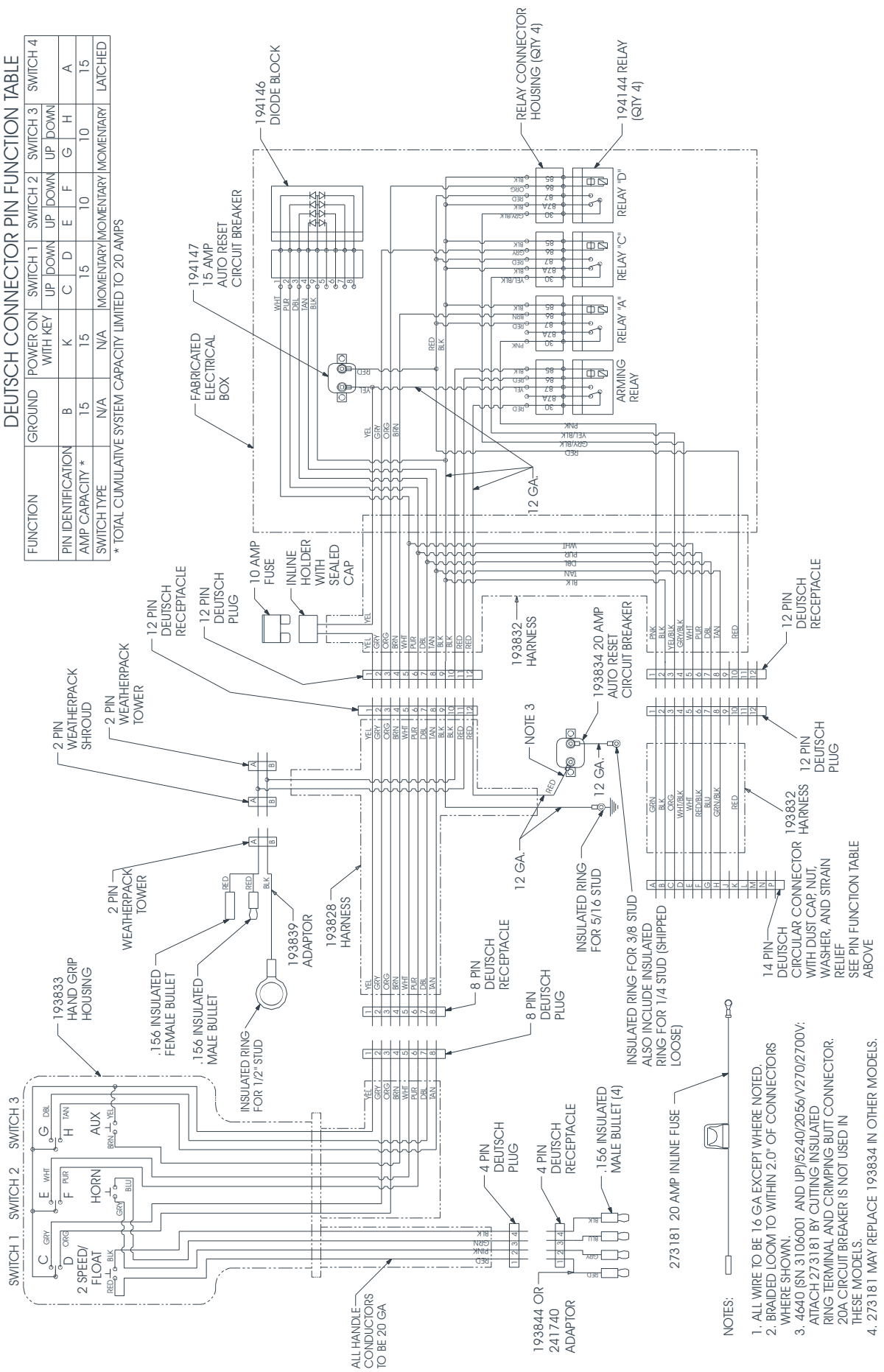

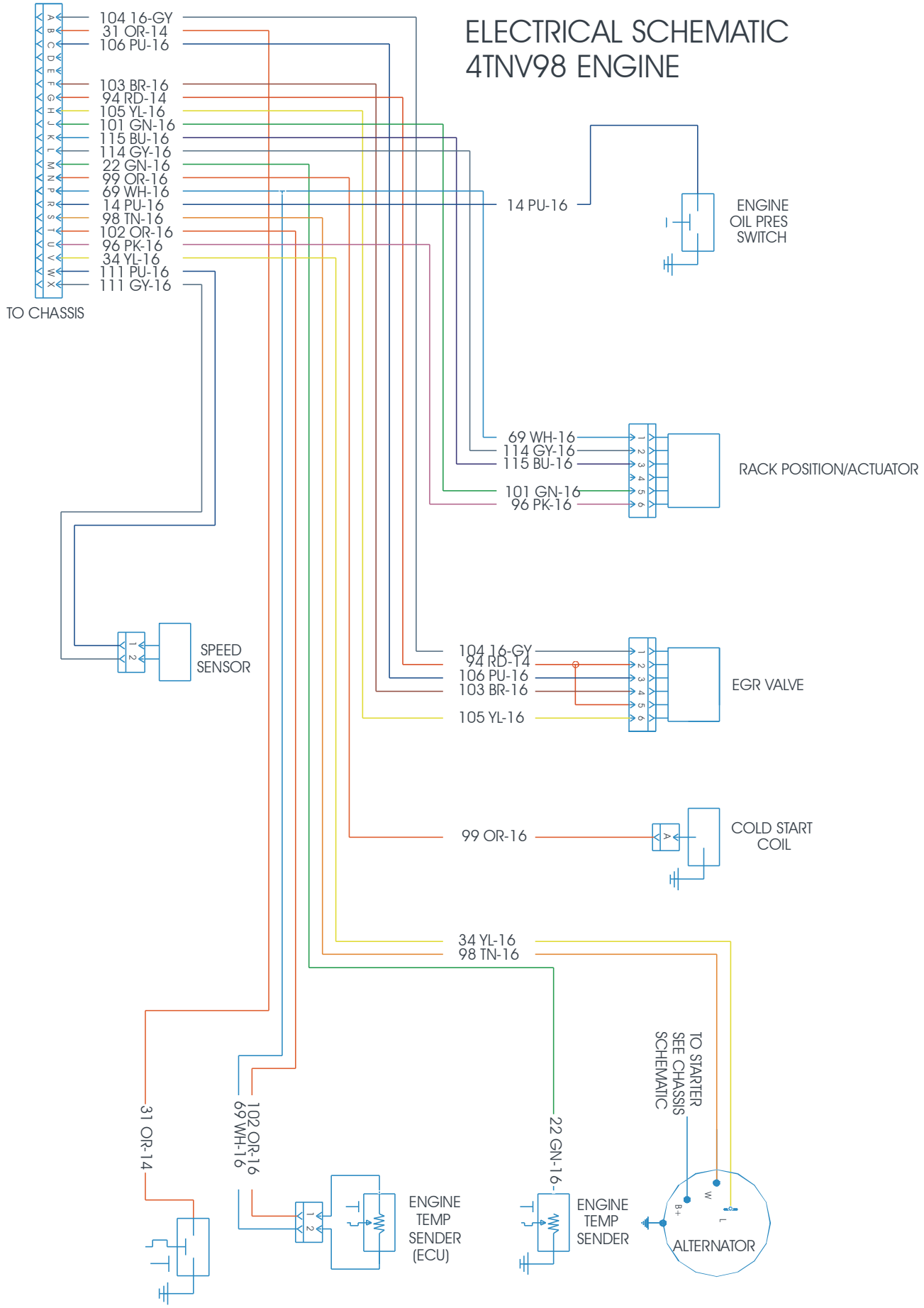
ELECTRICAL SCHEMATIC
4TNV98 ENGINE
104 16-GY
31 OR-14
106 PU-16
103 BR-16
94 RD-14
105 YL-16
101 GN-16
115 BU-16
114 GY-16
22 GN-16
99 OR-16
69 WH-16
14 PU-16
98 TN-16
102 OR-16
96 PK-16
34 YL-16
111 PU-16
111 GY-16
TO CHASSIS
14 PU-16
ENGINE
OIL PRES
SWITCH
69 WH-16
114 GY-16
115 BU-16
101 GN-16
96 PK-16
RACK POSITION/ACTUATOR
SPEED
SENSOR
104 16-GY
94 RD-14
106 PU-16
103 BR-16
105 YL-16
EGR VALVE
99 OR-16
COLD START
COIL
34 YL-16
98 TN-16
TO STARTER
SEE CHASSIS
SCHEMATIC
31 OR-14
102 OR-16
69 WH-16
22 GN-16
ENGINE
TEMP
SENDER
(ECU)
ENGINE
TEMP
SENDER
ALTERNATOR

REAR LIGHT POWER DISTRIBUTION SCHEMATIC

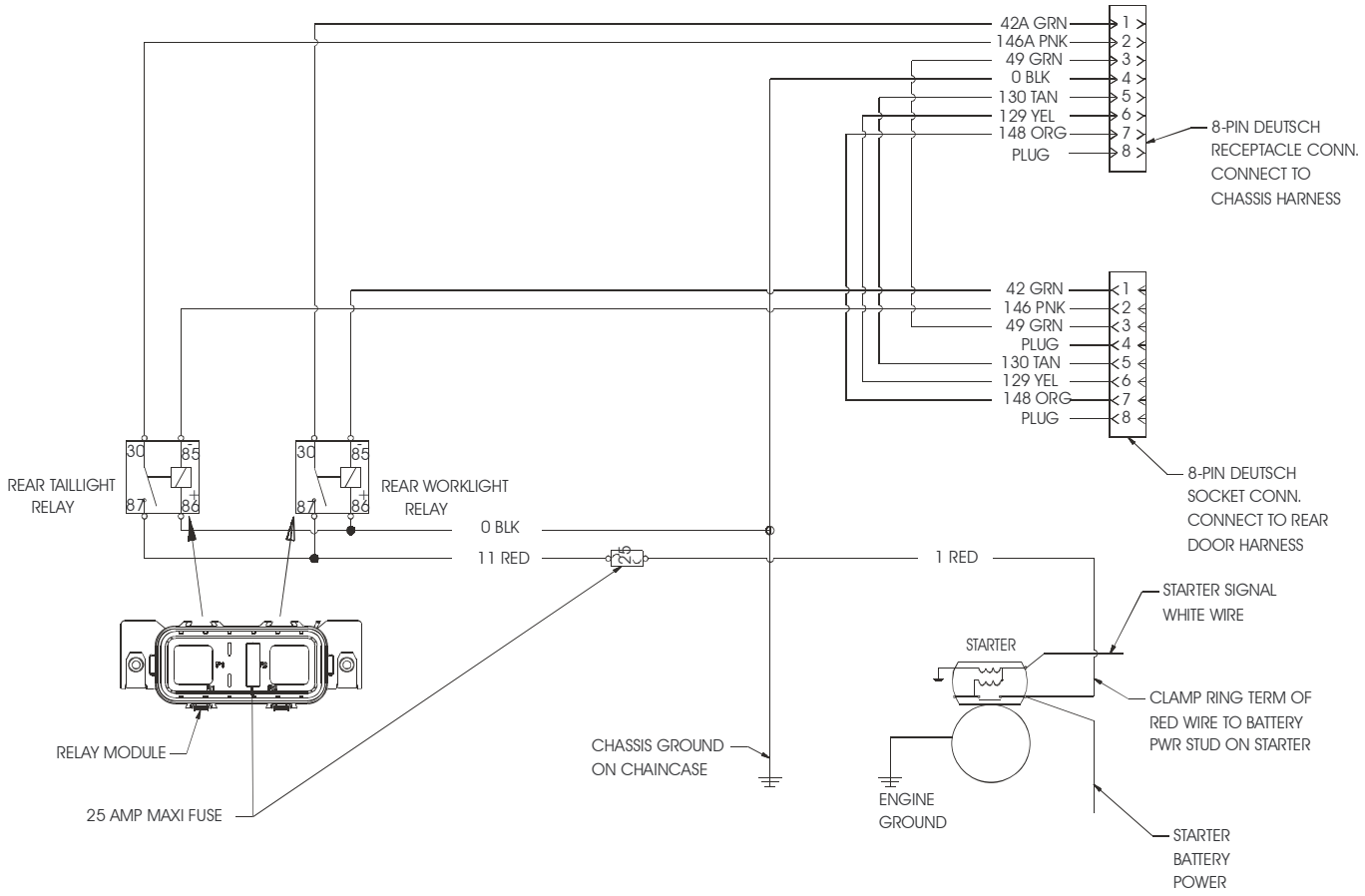

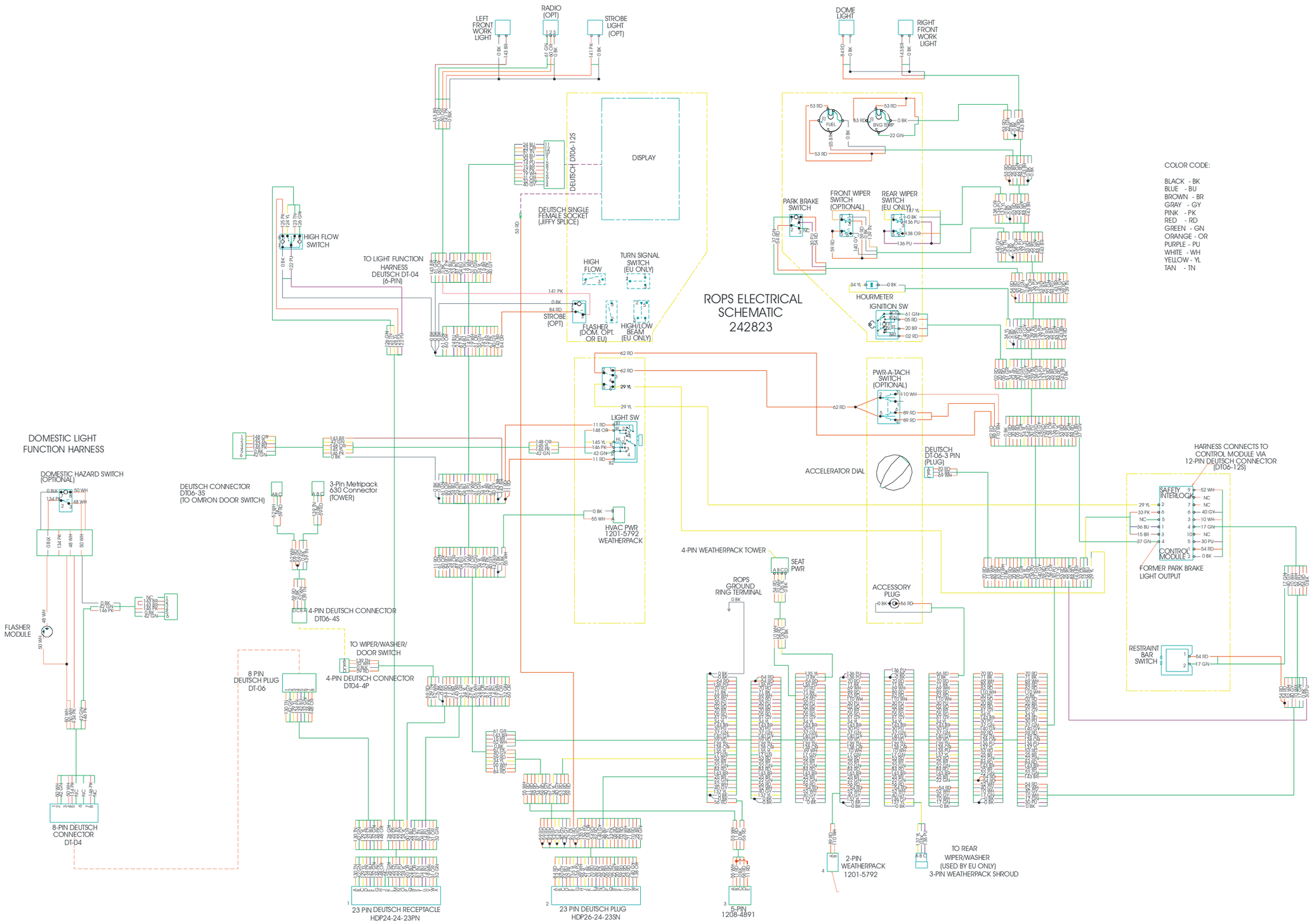
ROPS ELECTRICAL SCHEMATIC 242823
LEFT FRONT WORK LIGHT
RADIO (OPT)
STROBE LIGHT (OPT)
DOME LIGHT
RIGHT FRONT WORK LIGHT
DISPLAY
DEUTSCH DT06-12S
DEUTSCH SINGLE FEMALE SOCKET (JIFFY SPLICE)
HIGH FLOW SWITCH
TO LIGHT FUNCTION HARNESS DEUTSCH DT-04 (6-PIN)
HIGH FLOW
TURN SIGNAL SWITCH (EU ONLY)
STROBE (OPT)
FLASHER (DOM. OPT. OR EU)
HIGH/LOW BEAM (EU ONLY)
FUEL
ENG TEMP
PARK BRAKE SWITCH
FRONT WIPER SWITCH (OPTIONAL)
REAR WIPER SWITCH (EU ONLY)
HOURMETER
IGNITION SW
PWR-A-TACH SWITCH (OPTIONAL)
LIGHT SW
DOMESTIC LIGHT FUNCTION HARNESS
DOMESTIC HAZARD SWITCH (OPTIONAL)
DEUTSCH CONNECTOR DT06-3S (TO OMRON DOOR SWITCH)
3-Pin Metripack 630 Connector (TOWER)
HVAC PWR 1201-5792 WEATHERPACK
ACCELERATOR DIAL
DEUTSCH DT-06-3 PIN (PLUG)
HARNESS CONNECTS TO CONTROL MODULE VIA 12-PIN DEUTSCH CONNECTOR (DT06-12S)
SAFETY INTERLOCK
CONTROL MODULE 2
FORMER PARK BRAKE LIGHT OUTPUT
RESTRAINT BAR SWITCH
4-PIN WEATHERPACK TOWER
SEAT PWR
ROPS GROUND RING TERMINAL
ACCESSORY PLUG
FLASHER MODULE
DCSA 4-PIN DEUTSCH CONNECTOR DT06-4S
TO WIPER/WASHER/ DOOR SWITCH
4-PIN DEUTSCH CONNECTOR DT04-4P
8 PIN DEUTSCH PLUG DT-06
8-PIN DEUTSCH CONNECTOR DT-04
23 PIN DEUTSCH RECEPTACLE HDP24-24-23PN
23 PIN DEUTSCH PLUG HDP26-24-23SN
5-PIN 1208-4891
2-PIN WEATHERPACK 1201-5792
TO REAR WIPER/WASHER (USED BY EU ONLY) 3-PIN WEATHERPACK SHROUD
COLOR CODE:
BLACK - BK
BLUE - BU
BROWN - BR
GRAY - GY
PINK - PK
RED - RD
GREEN - GN
ORANGE - OR
PURPLE - PU
WHITE - WH
YELLOW - YL
TAN - TN

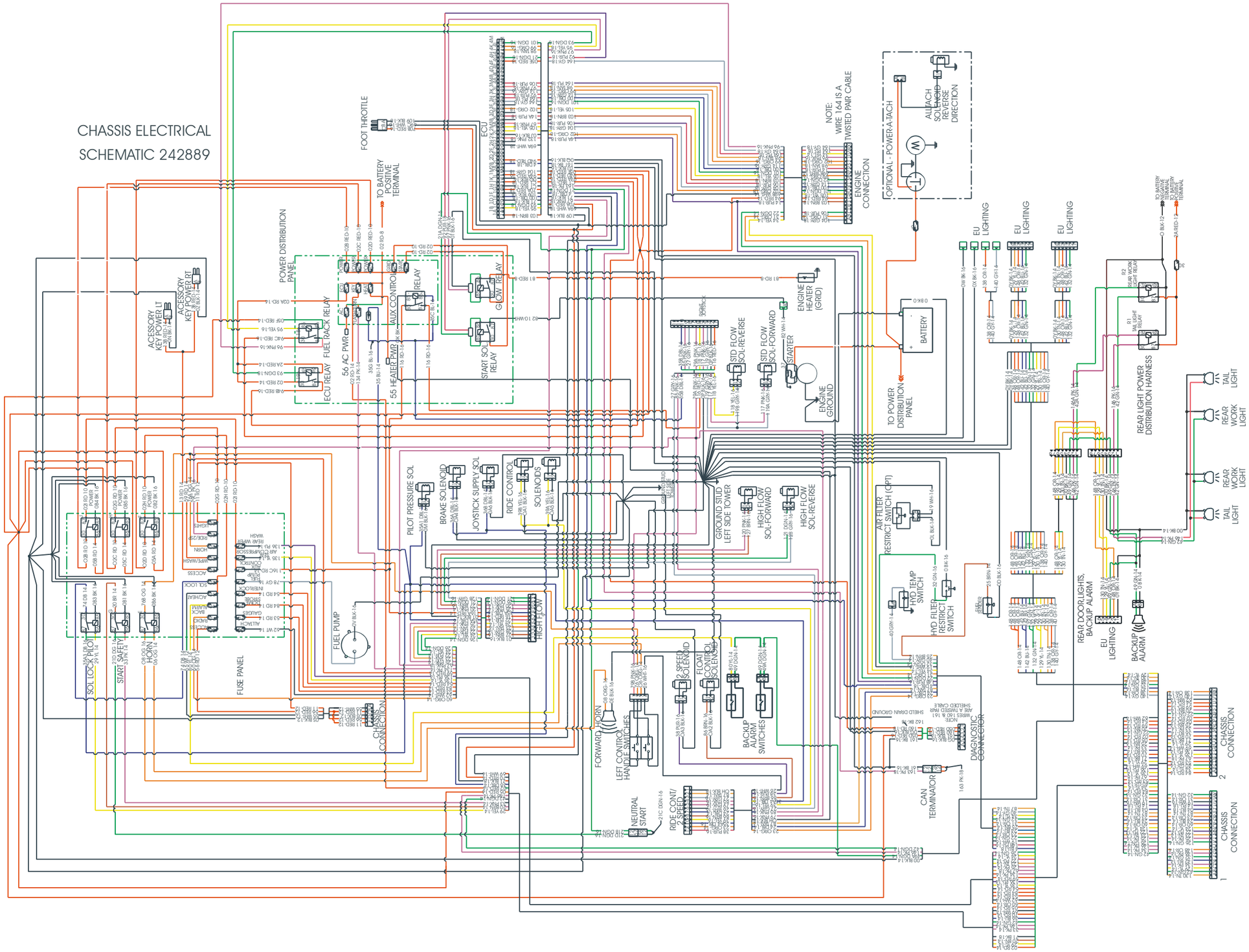
CHASSIS ELECTRICAL
SCHEMATIC 242889
FOOT THROTTLE
TO BATTERY POSITIVE TERMINAL
ECU
NOTE: WIRE 164 IS A TWISTED PAIR CABLE
ENGINE CONNECTION
OPTIONAL - POWER A-TACH
ALL TACH SOLENOID REVERSE DIRECTION
POWER DISTRIBUTION PANEL
ACESSORY KEY POWER LT
ACESSORY KEY POWER RT
ECU RELAY
FUEL RACK RELAY
56 AC PWR
AUX CONTROL RELAY
55 HEATER PWR
START SOL RELAY
GLOW RELAY
ENGINE HEATER (GRID)
STD FLOW SOL-REVERSE
STD FLOW SOL-FORWARD
STARTER
ENGINE GROUND
BATTERY
TO POWER DISTRIBUTION PANEL
EU LIGHTING
REAR LIGHT POWER DISTRIBUTION HARNESS
TAIL LIGHT
REAR WORK LIGHT
PILOT PRESSURE SOL
BRAKE SOLENOID
JOYSTICK SUPPLY SOL
RIDE CONTROL SOLENOIDS
GROUND STUD LEFT SIDE TOWER
HIGH FLOW SOL-FORWARD
HIGH FLOW SOL-REVERSE
AIR FILTER RESTRICT SWITCH (OPT)
HYD TEMP SWITCH
HYD FILTER RESTRICT SWITCH
REAR DOOR LIGHTS, BACKUP ALARM
BACKUP ALARM
SOL LOCK
START SAFETY
HORN
FUSE PANEL
FUEL PUMP
CHASSIS CONNECTION
FORWARD HORN
LEFT CONTROL HANDLE SWITCHES
2 SPEED SOLENOID
FLOAT CONTROL SOLENOIDS
BACKUP ALARM SWITCHES
NEUTRAL START
RIDE CONT/ 2 SPEED
CAN TERMINATOR
DIAGNOSTIC CONNECTOR

WIRE #	COLOR	FUNCTION	WIRE #	COLOR	FUNCTION	WIRE #	COLOR	FUNCTION	WIRE #	COLOR	FUNCTION
-	BLACK	GROUND	45	YELLOW	PULL COIL TIMER	89	RED	ALL-TACH POWER (LOCKING)	135	YELLOW	SEAT AIR COMPRESSOR PWR
1	RED	BATT POWER DIRECT	46	PURPLE	PULL COIL TIMER	90	RED	GLOW MODULE POWER	136	PURPLE	REAR WIPER/WASH PWR
2	RED	BATT POWER FUSED	47	WHITE	PULL COIL RELAY/FUEL SOL	91	RED	ELECTRIC AUXILIARY POWER	137	YELLOW	REAR WIPER SW PWR
3	BLUE	GLOW COIL	48	WHITE	LIGHT SW/FLASHER	92	PURPLE	START RELAY GRND TO ECU	138	ORANGE	REAR WASHER SW PWR
4	BLUE	GLOW CONTROL LAMP	49	GREEN	BACK UP ALARM	93	GREEN	ECU POWER RELAY GRND TO ECU	139	TAN	FRT WIPER PWR
5	RED	IGN SW/PWR RELAY	50	WHITE	FLASHER/CONNECTOR	94	RED	ECU/EGR POWER - KEYED	140	GRAY	FRT WASHER SW PWR
6	ORANGE	HORN BUTTON/RELAY	51	RED	FUEL SOL (HOLD)	95	YELLOW	FUEL RACK RELAY GRND TO ECU	141	PINK	STROBE SWITCH PWR
7	RED	PWR RELAY/CIRCUIT BREAKERS	52	WHITE	DOOR SWITCH/SAFETY MOD	96	PINK	FUEL RACK POWER - KEYED	142	BLUE	ROAD LTS/HI BEAM
8	ORANGE	HORN RELAY/HORN	53	RED	GAUGE POWER	97	PINK	GLOW RELAY CONTROL TO ECU	143	BROWN	FRONT WORKLIGHTS
9	NA	NA	54	RED	INTERLOCK POWER	98	TAN	ALTERNATOR SPEED OUTPUT	144	PUR	LICENSE PLT LIGHT
10	WHITE	SEAT SW	55	WHITE	AC/HEAT POWER	99	ORANGE	COLD START COIL TO ECU	145	YELLOW	ROADLIGHTS SW PWR
11	RED	LIGHTS POWER(KEYED)	56	RED	ACCESSORY POWER	100	BLUE	RACK POS SENSOR TO ECU	146	PINK	TAILLIGHTS SW PWR
12	RED	IGN (KEYED) PWR	57	BROWN	FAN CLUTCH	101	GREEN	FUEL RACK COIL GRND TO ECU	147	RED	STOP LIGHT
13	RED	CHASSIS POWER (KEYED)	58	YELLOW	GLOW RELAY SIGNAL	102	ORANGE	ENG TEMP SENSOR TO ECU	148	ORANGE	POSITION LIGHT SW PWR
14	PURPLE	OIL PRESSURE SW	59	RED	WIPER/WASH POWER	103	BROWN	EGR1 TO ECU	149	BROWN	FLASHER POWER TO RELAY
15	BROWN	SEAT BELT LAMP	60	ORANGE	RADIO POWER	104	GRAY	EGR2 TO ECU	150		
16	RED	ROPS POWER (KEYED)	61	GREEN	RADIO MEMORY	105	YELLOW	EGR3 TO ECU	151	GREEN	RH TURN SIG./FLASHER
17	GREEN	RESTRAINT BAR SW	62	RED	ALL TACH POWER (SWITCH)	106	PURPLE	EGR4 TO ECU	152	YELLOW	LH TURN SIG./FLASHER
18	YELLOW	SAFETY RELAY/ALTERNATOR	63	WHITE	ALL TACH POWER	107	WHITE	THROTTLE SENSOR (2) GRND	153	ORANGE	TURN SIGNAL SW PWR
19	WHITE	AIR FILTER RESTRICTION SW	64	BLACK	GLOW RELAY GRND TO ECM	108	RED	THROTTLE SENSOR (2) POWER	154		
20	BROWN	IGN SW/START RELAY #1	65	BLUE	INJ PUMP RELAY GRND TO ECM	109	BLACK	THROTTLE SENSOR (2) SIGNAL	155		
21	GREEN	START RELAY/SAFETY RELAY	66	PURPLE	LIFT PUMP RELAY GRND TO ECM	110	WHITE	ALL-TACH POWER UNLOCK	156		
22	GREEN	ENG TEMP SENDER	67	PINK	STOP/SHUTDOWN INDICATOR - ECM	111	TAN	COLD START SWITCH	157		
23	ORANGE	2 SPEED LAMP	68	TAN	WARN/COLD INDICATOR - ECM	112	PURPLE	AUX INTERLOCK TO START	158		
24	BLUE	RIDE CONTROL LAMP	69	WHITE	THROTTLE SENSOR GRND	114	GRAY	RACK CONTROL	159		
25	BROWN	FUEL SENDER	70	RED	THROTTLE SENSOR POWER	115	BLUE	RACK CONTROL	160	RED	CAN HI
26	WHITE	2 SP SW/CONTROL MODULE	71	BLACK	THROTTLE SENSOR SIGNAL	116	RED	AUXILIARY CONTROL POWER	161	BLACK	CAN LOW
27	GRAY	RIDE CONT SW/MODULE	72	BLUE	THROTTLE SWITCH SIGNAL	117	PINK	AUXILIARY COIL POWER - LF FORWARD	162	BLACK	GROUND - TWISTED PAIR SHIELD
28	GRAY	ENG TEMP SENDER/GLOW MODULE	73	ORANGE	THROTTLE SWITCH POWER	118	YELLOW	AUXILIARY COIL POWER - LF REVERSE	163	PINK	CANBUS TERMINATION
29	YELLOW	INTERLOCK MOD/ RELAY 1 & 2	74	BLUE	SOLENOID LOCK POWER	119	GRAY	AUXILIARY COIL FEEDBACK	164	GRAY/PURPLE	SPEED SENSOR(TWISTED PAIR)
30	PURPLE	BRAKE SW/INTERLOCK MOD	75	TAN	INJ PUMP POWER	120	PINK	AUXILIARY COIL POWER - HF FORWARD			
31	ORANGE	ENG TEMP SW	76	ORANGE	HORN POWER	121	GREEN	AUXILIARY COIL POWER - HF REVERSE			
32	GREEN	HYD FILTER SW	77	GRAY	LIFT PUMP POWER	122	PURPLE	AUXILIARY HF SWITCH POWER			
33	PINK	CONTROL MOD/START RELAY	78	GRAY	POWER TO LIFT PUMP	123	TAN	FORWARD SIG FROM SWITCH TO HF MODULE			
34	YELLOW	ALTERNATOR/HOUR METER	79	PINK	RIDE/2 SPEED MODULE POWER	124	YELLOW	REVERSE SIG FROM SWITCH TO HF MODULE			
35	BLUE	HYD SOLENOIDS	80	YELLOW	BACK UP ALARM POWER	125	PINK	POWER IND HF FORWARD			
36	BLUE	PARK BRAKE SOLENOID	81	RED	GLOW PLUG POWER	126	GREEN	POWERE IND HF REVERSE			
37	GREEN	PARK BRAKE LITE	82	WHITE	START SOL	127	BRN	AUX COIL FEEDBACK HF FORWARD			
38	PURPLE	CONTROL MOD/2 SP SOL.	83	TAN	FAN CLUTCH POWER	128	GRY	AUX COIL FEEDBACK HF REVERSE			
39	YELLOW	CONTROL MOD/RIDE CONT SOL.	84	RED	DOME/STROBE POWER	129	YELLOW	RIGHT TURN SIGNAL			
40	GRAY	HYD TEMP SW	85	PINK	FLOAT SW/CONT MOD	130	TAN	LEFT TURN SIGNAL			
41	YELLOW	START SIGNAL TO GLOW MOD	86	BROWN	CONT MOD/RIDE CONT SOL	131	GRAY	FRONT POSITION LIGHT			
42	GREEN	REAR WORK LTS.	87	TAN	FLOAT LAMP	132	GRN	ROAD LTS/LOW BEAM			
43	ORANGE	HEAD LTS & TAIL LTS	88	GRAY	EXTRA START FUEL SOL	133	ORANGE	LIGHTS POWER 2 (KEYED)			
44	PINK	GLOW MODULE	S	WHITE	SAFETY RELAY/STARTER	134	PINK	FLASHER/TURN SIG. POWER			

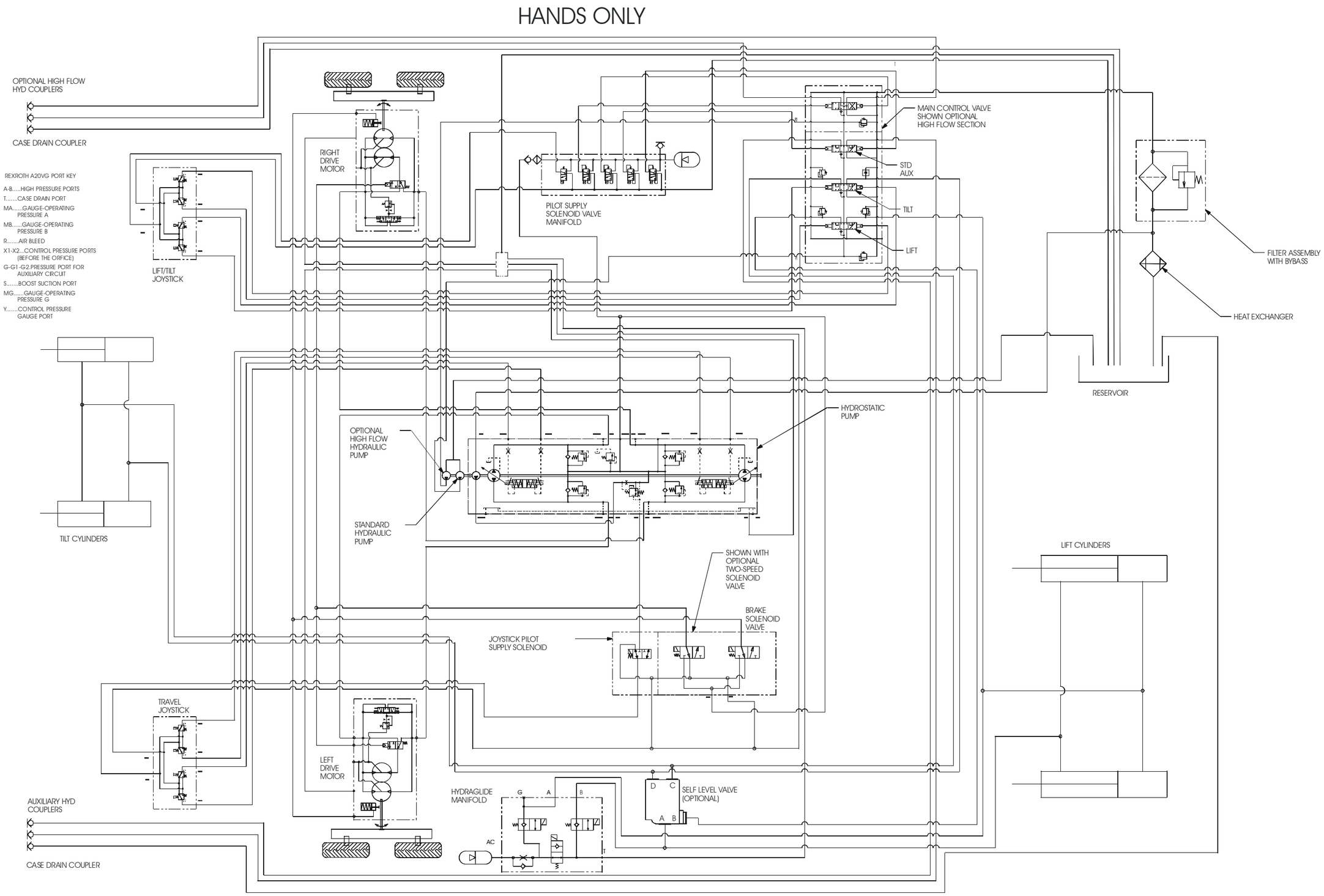
HANDS ONLY
OPTIONAL HIGH FLOW HYD COUPLERS
CASE DRAIN COUPLER
REXROTH A20VG PORT KEY
A-B.....HIGH PRESSURE PORTS
T.....CASE DRAIN PORT
MA.....GAUGE-OPERATING PRESSURE A
MB.....GAUGE-OPERATING PRESSURE B
R.....AIR BLEED
X1-X2...CONTROL PRESSURE PORTS (BEFORE THE ORFICE)
G-G1-G2.PRESSURE PORT FOR AUXILIARY CIRCUIT
S.....BOOST SUCTION PORT
MG.....GAUGE-OPERATING PRESSURE G
Y.....CONTROL PRESSURE GAUGE PORT
LIFT/TILT JOYSTICK
RIGHT DRIVE MOTOR
PILOT SUPPLY SOLENOID VALVE MANIFOLD
MAIN CONTROL VALVE SHOWN OPTIONAL HIGH FLOW SECTION
STD AUX
TILT
LIFT
FILTER ASSEMBLY WITH BYPASS
HEAT EXCHANGER
RESERVOIR
HYDROSTATIC PUMP
OPTIONAL HIGH FLOW HYDRAULIC PUMP
STANDARD HYDRAULIC PUMP
TILT CYLINDERS
LIFT CYLINDERS
SHOWN WITH OPTIONAL TWO-SPEED SOLENOID VALVE
BRAKE SOLENOID VALVE
JOYSTICK PILOT SUPPLY SOLENOID
TRAVEL JOYSTICK
LEFT DRIVE MOTOR
HYDRAGLIDE MANIFOLD
SELF LEVEL VALVE (OPTIONAL)
AUXILIARY HYD COUPLERS
CASE DRAIN COUPLER

HAND-FOOT

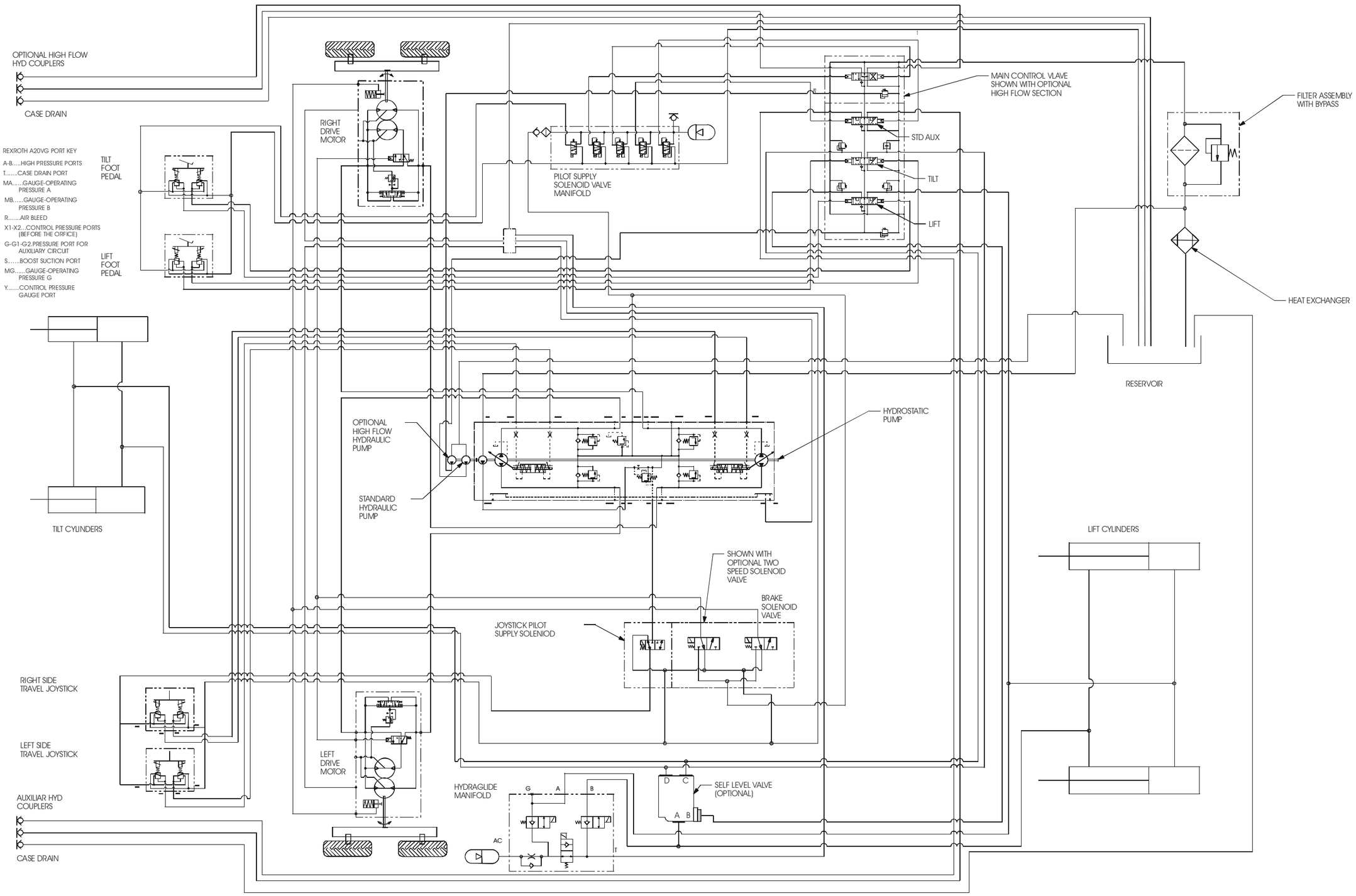
OPTIONAL HIGH FLOW HYD COUPLERS
CASE DRAIN
REXROTH A20VG PORT KEY
A-B.....HIGH PRESSURE PORTS
T.....CASE DRAIN PORT
MA.....GAUGE-OPERATING PRESSURE A
MB.....GAUGE-OPERATING PRESSURE B
R.....AIR BLEED
X1-X2...CONTROL PRESSURE PORTS (BEFORE THE ORFICE)
G-G1-G2.PRESSURE PORT FOR AUXILIARY CIRCUIT
S.....BOOST SUCTION PORT
MG.....GAUGE-OPERATING PRESSURE G
Y.....CONTROL PRESSURE GAUGE PORT
TILT FOOT PEDAL
LIFT FOOT PEDAL
RIGHT DRIVE MOTOR
PILOT SUPPLY SOLENOID VALVE MANIFOLD
MAIN CONTROL VLAVE SHOWN WITH OPTIONAL HIGH FLOW SECTION
STD AUX
TILT
LIFT
FILTER ASSEMBLY WITH BYPASS
HEAT EXCHANGER
RESERVOIR
HYDROSTATIC PUMP
OPTIONAL HIGH FLOW HYDRAULIC PUMP
STANDARD HYDRAULIC PUMP
TILT CYLINDERS
LIFT CYLINDERS
SHOWN WITH OPTIONAL TWO SPEED SOLENOID VALVE
BRAKE SOLENOID VALVE
JOYSTICK PILOT SUPPLY SOLENIOD
RIGHT SIDE TRAVEL JOYSTICK
LEFT SIDE TRAVEL JOYSTICK
LEFT DRIVE MOTOR
HYDRAGLIDE MANIFOLD
SELF LEVEL VALVE (OPTIONAL)
AUXILIAR HYD COUPLERS
CASE DRAIN

This Page Intentionally Left Blank

Part No.	Page No.	Ref. No.
054626	54	2
054626	56	2
054626	64	1
054626	66	1
054626	68	1
054626	70	1
054626	80	1
054816	68	2
054816	70	2
054819	68	3
054820	86	1
054885	88	1
054985	102	1
054994	64	2
054994	66	2
054994	68	4
054994	70	3
054994	74	1
054994	76	1
054994	78	1
054994	80	2
054994	82	1
054994	84	1
054994	86	2
055005	62	1
055005	74	2
055005	76	2
055005	78	2
055021	24	1
055021	50	1
055021	183	1
055030	68	5
055030	70	4
055648	6	1
055648	10	1
055648	30	1
055648	68	6
055648	70	5
055648	84	2
055648	90	1
055648	92	1
055648	94	1
055648	169	1
055648	178	1
055648	180	1
055648	181	1
055648	190	1
055925	96	1
055925	96	1
055981	64	3
055981	66	3
055981	76	3
055981	78	3
056937	88	2
057557	24	2
058805	6	2
058805	10	2
058805	18	1
058805	54	3
058805	56	64
058805	62	2
058805	98	1
058805	172	1
061166	2	2
061166	4	2
061946	62	3
061946	70	6
062023	2	3
062023	4	3
062023	62	4
064260	22	2
064260	24	3
064260	54	4
064260	56	3
064260	62	5
064260	68	8
064260	70	7
064260	72	1
064260	72	1
064260	76	4
064260	78	4
064260	90	2
064260	94	2
064260	185	1
064260	187	1
064354	58	1
064354	60	1
064354	74	3
064354	76	5
064354	78	5
067750	98	2
067761	68	9
067761	70	8
067761	72	2
067761	187	2
067823	24	4
067847	22	3
067847	32	1
067847	34	1
067847	42	1
067847	44	1
067847	46	1
067847	54	5
067847	56	4
067847	80	3
067847	189	1
067849	10	3
067849	14	1
067849	20	1
067849	174	1
067950	32	2
067950	84	3
067950	86	3
068034	44	2
068938	24	5
068938	50	2
068938	64	4
068938	66	4
068938	74	4
068938	183	2
070634	22	4
070634	90	3
070634	94	3
070634	177	1
070648	48	1
070648	54	6
070648	56	5
070648	184	1
070856	4	4
070856	62	6
070856	68	10
070856	70	9
071246	54	7
071246	56	59
071401	24	6
071401	32	3
071401	34	2
071401	48	2
071401	54	8
071401	56	6
071401	62	7
071401	76	6
071401	78	6
071401	90	4
071401	94	4
071401	102	2
071401	170	1
071401	178	2
071401	184	2
071401	190	2
071703	6	3
071703	10	4
071703	14	2
071703	190	3
071706	2	4
071706	4	5
071706	22	5
072340	98	3
072343	2	5
072343	4	6
072580	54	9
072580	56	7
072580	68	11
072580	70	10
072587	68	12
072587	70	11
072587	74	5
072587	76	7
072587	78	7
072806	86	5
072806	165	1
072807	68	13
072807	72	3
072807	187	3
072916	62	8
072916	76	8
072916	78	26
073458	115	1
073535	86	6
073694	98	13
074091	100	1
075196	68	14
075196	70	12
075288	88	3
076078	74	6
076078	76	9
076078	78	8
076078	82	2
076078	181	2
076078	190	4
076147	30	2
076147	80	4
076147	102	3
076147	178	3
076587	74	7
076587	76	10
076587	78	9
076588	48	3
076588	62	9
076588	184	3
076589	48	3
076589	58	2
076589	60	2
076589	181	3
077685	90	5
079026	50	2
079092	64	5
079092	66	5
079097	68	15
079097	76	11
079097	78	10
079098	48	4
079098	50	3
079098	68	16
079098	70	13
079098	72	2
079098	72	4
079098	78	11
079098	80	5
079098	183	3
079098	184	4
079098	185	2
079098	187	4
079126	68	17
079126	70	14
079126	72	3
079126	72	5
079126	187	5
079152	52	1
080808	146	5
080809	146	7
080810	146	9

NUMERICAL INDEX

Part No.	Page No.	Ref. No.	Part No.	Page No.	Ref. No.	Part No.	Page No.	Ref. No.	Part No.	Page No.	Ref. No.
080811	146	12	094762	6	4	131050	115	2	132554	144	3
080813	146	14	094762	10	5	131488	128	3	132555	144	4
081371	38	1	094762	14	5	131529	2	9	132621	130	52
081371	40	1	095619	90	8	131529	4	10	132681	188	1
081374	22	6	095619	94	6	131529	160	1	132707	54	13
081379	98	4	095955	6	5	131606	52	2	132707	56	10
081380	2	6	095955	10	6	131607	52	3	134588	6	8
081380	4	7	095955	14	6	131609	52	7	134588	10	9
081380	48	5	095955	18	2	131842	6	7	134588	14	9
081380	68	18	095955	20	2	131842	10	8	134588	18	5
081380	70	15	095955	58	3	131842	14	8	134588	50	5
081380	84	5	095955	172	2	131842	18	4	134588	88	6
081380	86	7	095955	174	2	131842	20	4	134588	165	2
081380	184	5	096511	54	10	131842	22	2	134588	172	5
082489	52	2	096511	56	65	131842	32	5	134588	179	1
082489	52	3	103052	150	10	131842	34	3	134588	183	5
084174	169	2	103060	150	1	131842	54	12	134756	68	23
084174	190	5	104052	6	6	131842	56	9	134756	70	20
084175	158	1	104052	10	7	131842	58	5	134852	6	9
084175	170	2	104052	14	7	131842	60	4	134852	10	10
087393	64	6	104052	18	3	131842	68	21	134852	14	10
087393	66	6	104052	20	3	131842	70	18	134852	18	6
087849	80	6	104052	172	3	131842	72	6	134852	20	6
087849	177	2	104052	174	3	131842	90	10	134852	22	13
087850	62	30	114665	22	9	131842	94	8	134852	32	6
087854	42	2	114824	48	8	131842	156	1	134852	48	9
088101	42	16	114824	184	8	131842	158	2	134852	102	5
088467	2	7	114824	185	4	131842	172	4	134852	172	6
088467	4	8	121002	88	4	131842	174	4	134852	174	6
088467	48	6	121030	86	10	131842	176	1	134852	184	9
088467	86	8	121030	94	39	131842	187	6	134853	2	12
088467	90	6	121030	115	43	131842	190	7	134853	4	12
088467	94	5	121773	64	8	131913	22	11	134853	22	14
088467	98	5	121773	66	8	131940	22	12	134853	110	2
088467	104	1	121775	64	9	132049	68	22	134853	186	2
088467	184	6	121775	66	9	132049	70	19	134966	2	13
088471	146	18	122485	22	10	132050	2	10	134966	4	13
088472	146	17	122485	22	35	132050	4	29	134966	80	8
088473	146	16	122485	168	1	132051	2	46	134966	110	3
088904	48	7	122485	190	6	132051	4	29	134966	186	3
088904	50	4	122778	86	11	132088	44	3	135300	44	4
088904	80	7	124072	128	2	132088	46	2	135300	46	3
088904	183	4	127342	68	20	132166	24	7	135300	80	9
088904	184	7	127342	70	17	132166	115	28	135367	68	24
088904	185	3	127428	58	4	132248	74	8	135367	72	7
088912	22	7	127428	60	3	132294	24	8	135367	146	
088912	44	1	128007	54	11	132294	115	29	135367	187	7
088912	46	1	128007	56	8	132298	2	11	135427	54	14
089001	70	16	128007	102	4	132298	4	11	135427	56	11
089071	14	4	128316	32	4	132353	167	1	135773	2	14
089099	64	7	128316	84	6	132504	20	5	135773	4	14
089099	66	7	128316	86	12	132504	174	5	135773	64	10
089961	146	15	128316	88	5	132541	140	3	135773	66	10
090666	22	8	128508	108	1	132542	144	5	135928	64	11
090666	90	7	128508	108	2	132546	140	1	135928	66	11
091666	104	2	129004	146	13	132546	144	1	135930	74	8
091667	104	3	129066	146		132547	140	2	135930	140	
092164	2	52	129124	86	13	132547	144	2	136226	48	10

Part No.	Page No.	Ref. No.
136226	54	15
136226	56	13
136226	184	10
136251	22	15
136304	6	10
136304	10	11
136304	14	11
136304	18	7
136304	20	7
136304	172	7
136304	174	7
136305	6	11
136305	10	12
136305	14	12
136305	18	8
136305	20	8
136305	172	8
136305	174	8
136601	2	15
136601	4	15
136601	46	4
136601	189	2
136765	44	5
136765	46	5
136766	44	6
136766	46	6
137036	32	7
137049	58	6
137049	60	5
137061	32	8
137061	34	4
137063	54	16
137063	56	14
137072	52	8
137147	44	2
137147	46	2
137158	44	3
137158	46	3
137164	44	4
137164	46	4
137167	44	5
137167	46	5
137168	44	7
137168	46	7
137169	44	8
137169	46	8
137170	44	9
137170	46	9
137186	80	10
137243	108	1
137379	44	6
137379	46	6
137385	44	7
137385	46	7
137386	44	10
137386	46	10
137387	44	11
137387	46	11
137387	50	6
137387	183	6
137433	160	2
137437	160	3
137438	160	4
137447	24	9
137462	190	8
137497	98	6
137545	115	3
137602	98	7
137603	98	8
137606	84	7
137606	86	14
137608	86	15
137632	115	4
137634	115	5
137637	115	19
137641	22	16
137655	115	25
137657	115	22
137658	115	23
137660	115	6
137661	115	7
137696	24	11
137707	24	12
137718	110	4
137718	115	45
137718	186	4
137718	189	3
137753	98	9
137755	115	24
137784	84	8
137784	86	16
137797	6	12
137797	10	13
137797	14	13
137797	18	9
137797	22	17
137797	90	11
137797	94	9
137797	106	1
137797	156	2
137797	158	3
137797	172	9
137797	176	2
137811	161	12
137821	6	13
137821	10	14
137821	14	14
137821	18	10
137821	20	9
137821	98	10
137821	172	10
137821	174	9
137844	115	25
137845	115	22
137846	115	23
137848	115	19
137852	115	24
137859	80	11
137915	52	5
138274	178	4
138298	52	4
138593	2	16
138593	4	16
138623	156	3
138623	158	4
138649	6	14
138649	10	15
138649	14	15
138651	6	15
138651	10	16
138651	14	16
138662	189	4
138711	115	8
138714	6	16
138714	10	17
138714	14	17
138723	6	17
138723	10	18
138723	14	18
138752	44	8
138752	46	8
138759	52	3
138763	44	9
138763	46	9
138825	24	13
138877	68	25
138877	70	21
139101	50	7
139101	116	42
139101	183	7
139107	50	8
139107	116	40
139107	183	8
139109	50	9
139109	116	41
139109	183	9
139355	189	5
139521	42	17
139952	6	18
139952	10	19
139952	14	19
140516	115	9
140655	24	14
140655	160	
140855	24	15
140880	165	3
183146	2	17
183146	4	17
183423	42	18
183423	126	2
183453	128	4
183608	14	20
183634	98	11
183672	24	16
183672	160	
183733	96	1
183784	52	4
183812	22	18
183814	90	12
183814	94	10
183902	84	9
183935	116	32
183963	116	33
183998	58	7
183998	60	6
184006	6	19
184006	10	20
184006	14	21
184006	90	13
184006	94	11
184007	38	2
184007	40	2
184023	22	19
184099	58	8
184099	60	7
184116	116	38
184130	182	
184139	116	37
184146	58	9
184146	60	8
184195	58	10
184195	60	9
184210	84	10
184210	86	17
184211	84	11
184211	86	18
184214	115	21
184215	115	44
184357	50	10
184357	116	39
184357	183	10
184363	68	27
184363	70	23
184363	154	
184384	154	1
184388	154	3
184389	154	2
184415	68	28
184415	70	24
184526	116	36
184541	62	10
184560	90	14
184560	94	12
184605	58	11
184605	60	10
184670	2	18
184670	4	18
184682	182	
184683	182	
184684	182	
184685	182	
184711	115	21

NUMERICAL INDEX

Part No.	Page No.	Ref. No.	Part No.	Page No.	Ref. No.	Part No.	Page No.	Ref. No.	Part No.	Page No.	Ref. No.
184715	46	12	187726	60	14	191700	86	20	193157	32	10
184797	160	7	188430	84	12	191709	134	6	193157	34	6
184798	160	6	188430	86	19	191711	134	8	193206	94	13
184799	160	5	188985	68	29	191712	134	13	193297	128	5
184800	160	4	188985	70	25	191712	134	14	193298	128	6
184801	160	3	189033	6	22	191713	134	16	193299	80	15
184802	160	2	189033	18	13	191714	134	21	193299	128	
184803	160	1	189033	172	13	191714	134	49	193335	86	21
184986	130	42	189144	2	20	191716	136	12	193335	162	
184986	132	6	189144	4	20	191716	138	14	193413	86	22
184987	130	45	189192	84	14	191717	136	10	193486	68	31
184987	132	7	189193	84	15	191717	136	10	193486	72	11
184991	130	32	189351	84	17	191717	138	37	193486	187	11
184991	132	18	189358	84	16	191717	138	37	193524	76	13
184992	130	49	189364	84	13	191718	134	51	193524	78	15
184992	132	18	189401	22	20	191718	136	11	193526	74	10
186014	58	12	189640	54	18	191718	138	38	193526	76	14
186014	60	11	189640	56	16	191720	136	12	193562	74	11
186016	130	111	189709	2	21	191720	138	14	193562	76	15
186016	132	17	189709	4	21	191722	134	51	193569	54	23
186022	130	71	189821	90	15	191763	68	30	193569	56	21
186026	130	48	189833	22	21	191763	72	10	193588	102	6
186080	2	19	190045	22	22	191763	187	10	193665	68	32
186080	4	19	190270	84	18	191826	2	63	193665	70	26
186151	156	4	190280	22	23	192178	185	6	193674	66	12
186151	158	5	190282	22	24	192182	18	15	193674	132	
186151	176	3	190282	62	11	192182	20	12	193675	66	13
186193	6	20	190400	2	22	192182	24	17	193675	132	
186193	10	21	190400	4	22	192182	169	17	193706	2	23
186193	14	22	190597	78	12	192182	172	15	193706	4	23
186193	18	11	190597	144		192182	174	12	193709	62	12
186193	20	10	190646	115	10	192182	190	37	193743	68	7
186193	172	11	190845	62	31	192266	80	14	193773	66	14
186193	174	10	190923	50	22	192266	126		193776	66	15
186308	54	17	190954	116	35	192587	177	4	193828	178	5
186308	56	15	191020	108	1	192731	177	5	193831	178	6
186703	14	23	191020	108	1	192739	60	15	193832	178	7
186716	14	24	191020	108	1	192909	54	19	193833	178	8
186834	40	3	191020	108	1	192909	56	17	193837	102	7
186906	177	3	191020	108	2	192932	58	16	193838	90	16
187030	6	21	191020	108	2	192932	60	16	193838	94	14
187030	10	22	191020	108	2	192968	58	17	193839	178	10
187030	14	25	191020	108	2	192968	60	17	193840	102	8
187030	18	12	191192	48	11	193024	54	20	193844	178	11
187030	20	11	191192	184	11	193024	56	18	193850	178	12
187030	172	12	191351	6	23	193096	58	18	193852	178	13
187030	174	11	191351	10	23	193096	60	18	193855	178	14
187045	165	4	191351	14	26	193103	74	9	193856	90	17
187405	190	9	191351	18	14	193104	76	12	193856	94	15
187474	54	24	191351	172	14	193104	78	13	193857	178	15
187474	56	22	191477	98	12	193105	54	21	193934	106	2
187474	62	24	191549	72	8	193105	56	19	193971	54	25
187474	185	5	191549	187	8	193131	54	22	193971	56	23
187581	58	13	191553	72	9	193131	56	20	194004	64	12
187581	60	12	191553	187	9	193154	58	19	194004	66	16
187725	58	14	191635	98	23	193154	60	19	194052	64	13
187725	60	13	191651	54	26	193156	32	9	194052	66	17
187726	58	15	191651	56	24	193156	34	5	194059	64	14

Part No.	Page No.	Ref. No.
194059	66	18
194068	54	26
194068	56	24
194071	86	23
194077	86	24
194097	86	25
194118	64	15
194118	66	19
194126	64	16
194126	66	20
194136	178	16
194146	178	18
194147	178	19
194166	54	27
194166	56	25
194210	64	17
194210	66	21
194233	130	10
194233	132	1
194234	130	15
194234	132	2
194235	132	3
194236	130	43
194236	132	4
194237	130	46
194237	132	5
194238	132	8
194239	132	9
194244	130	72
194244	132	11
194247	130	100
194247	132	13
194248	130	115
194248	132	14
194249	130	107
194249	132	15
194250	130	106
194250	132	16
194251	132	
194252	130	70
194252	132	10
194253	130	90
194253	132	12
194271	2	24
194271	4	24
194309	50	11
194309	183	11
194316	54	28
194316	56	27
194317	56	28
194380	50	12
194380	183	12
194451	84	19
194451	86	26
194507	178	20
194510	78	16
194554	94	16
194633	94	17
194638	94	18
194638	102	9
194686	88	7
194701	156	1
194701	158	1
194732	64	18
194732	66	22
194732	84	4
194732	86	4
194738	102	11
194750	52	5
194797	102	12
194825	60	20
194862	115	11
194863	115	12
194864	116	36
194865	116	35
194945	102	13
194981	156	4
194981	158	5
195009	102	14
195087	98	13
195101	64	19
195101	130	
195102	64	20
195102	130	
195125	58	20
195125	60	21
195138	2	25
195138	4	25
195141	64	29
195141	66	32
195161	88	8
195164	86	27
195209	88	9
195213	88	10
195221	54	31
195221	56	31
195261	58	21
195261	60	22
195350	24	18
195413	54	32
195413	56	32
195443	84	21
195443	86	28
195511	84	22
195511	86	52
195528	84	23
195528	86	29
195557	86	30
195559	84	24
195568	54	33
195568	56	33
195585	6	24
195585	10	24
195585	14	27
195588	6	25
195588	10	25
195588	14	28
195591	14	29
195591	174	13
195605	6	26
195605	10	26
195605	14	30
195606	6	27
195606	10	27
195606	14	31
195660	6	28
195660	10	28
195660	14	32
195660	18	16
195660	20	13
195660	172	16
195660	174	14
195691	130	40
195692	130	47
195693	130	150
195740	90	18
195740	94	20
195775	115	13
195889	84	20
197960	179	6
198139	54	29
198170	134	1
198170	138	
198171	134	2
198171	138	
198172	134	3
198173	138	1
198174	138	1
198175	134	7
198178	126	3
198178	128	9
198190	148	1
198191	148	2
198192	148	3
198193	148	4
198194	148	5
198195	148	6
203822	54	29
240021	54	35
240021	56	35
240054	24	21
240055	30	4
240055	180	3
240056	64	22
240056	148	
240057	66	24
240057	148	
240083	58	22
240083	60	23
240084	98	25
240138	177	6
240140	177	7
240172	86	34
240176	90	19
240176	94	21
240189	152	1
240196	152	5
240197	152	6
240198	152	7
240200	152	1
240201	152	4
240202	152	2
240272	150	2
240273	150	3
240274	150	4
240275	150	5
240276	150	6
240277	150	7
240278	150	8
240279	150	11
240282	150	9
240284	150	11
240306	177	8
240364	108	1
240364	108	1
240364	108	2
240364	108	2
240364	108	2
240388	42	4
240416	42	5
240416	80	16
240418	64	23
240418	66	25
240419	42	6
240419	80	17
240421	70	27
240461	156	
240461	158	
240463	62	13
240523	14	34
240523	174	15
240583	104	4
240585	14	35
240585	174	16
240616	4	27
240632	90	20
240632	94	22
240634	86	35
240645	24	22
240665	2	27
240665	4	28
240670	68	34
240670	70	28
240674	4	29
240687	24	23
240719	78	18
240732	68	35
240732	72	12
240732	187	12
240741	68	36
240741	70	29
240742	70	30

NUMERICAL INDEX

Part No.	Page No.	Ref. No.	Part No.	Page No.	Ref. No.	Part No.	Page No.	Ref. No.	Part No.	Page No.	Ref. No.
240744	70	31	241209	10	34	241480	26	1	241844	6	38
240745	86	36	241209	14	39	241486	6	37	241844	10	38
240768	90	21	241209	18	18	241486	10	37	241844	14	44
240768	94	23	241209	20	15	241486	14	43	241877	78	21
240769	90	22	241209	172	18	241486	18	19	241900	30	5
240769	94	24	241209	174	18	241486	20	16	241900	180	4
240830	76	17	241227	96	1	241486	172	19	241932	54	43
240830	78	19	241233	2	34	241486	174	19	241932	56	44
240884	2	28	241233	4	38	241495	90	23	241954	96	1
240884	4	31	241234	2	35	241495	94	25	241955	96	1
240887	2	29	241234	4	39	241520	2	37	241961	96	1
240887	4	32	241241	34	7	241520	4	41	241962	34	9
240901	84	27	241251	6	35	241525	42	9	241963	32	12
240903	2	30	241251	10	35	241532	100	3	241963	34	10
240903	4	33	241251	14	40	241535	86	40	241974	62	32
240912	80	18	241259	54	36	241540	68	40	241975	34	11
240914	80	19	241259	56	36	241540	70	35	241978	64	27
240918	82	4	241284	54	37	241544	24	32	241978	66	30
240922	82	5	241284	56	37	241558	80	25	241978	134	
240954	24	24	241285	24	26	241560	24	33	241987	26	6
240961	2	31	241304	68	38	241562	54	40	241987	28	9
240961	4	34	241304	70	33	241562	56	41	241987	175	2
240971	22	27	241312	24	27	241563	54	41	242016	32	13
241008	6	31	241323	64	24	241563	56	42	242016	34	12
241008	10	31	241323	66	26	241604	62	16	242026	2	38
241008	14	36	241325	66	27	241605	54	42	242026	4	42
241010	6	32	241334	80	21	241605	56	43	242027	34	13
241010	10	32	241340	64	25	241618	62	17	242029	84	30
241010	14	37	241340	66	28	241650	28	1	242029	86	41
241014	62	14	241346	24	28	241650	175	1	242035	34	14
241040	98	28	241349	68	39	241652	24	58	242036	24	35
241067	80	20	241349	70	34	241653	68	41	242041	4	43
241069	82	6	241353	34	8	241653	72	13	242044	88	13
241110	68	37	241354	24	29	241653	187	13	242046	2	39
241110	70	32	241357	24	30	241655	68	42	242046	4	44
241117	100	2	241364	64	26	241655	72	14	242049	22	31
241133	62	15	241364	66	29	241655	187	14	242055	22	33
241142	98	15	241382	80	22	241679	22	28	242089	170	3
241153	4	35	241385	6	36	241701	50	13	242105	32	14
241155	42	7	241385	10	36	241701	183	13	242105	34	15
241165	76	18	241385	14	42	241706	70	36	242111	98	16
241165	78	20	241389	86	37	241711	50	14	242112	98	17
241169	2	32	241390	24	31	241711	183	14	242113	98	18
241169	4	36	241391	86	38	241713	70	37	242114	26	2
241170	84	28	241392	86	39	241720	50	15	242144	178	17
241178	96	1	241397	2	36	241720	183	15	242145	6	39
241187	24	25	241397	4	40	241721	50	16	242145	10	39
241198	42	8	241402	84	29	241721	183	16	242145	14	3
241199	2	33	241422	74	13	241724	46	13	242145	156	5
241199	4	37	241422	76	19	241738	22	29	242145	158	6
241208	6	33	241431	80	23	241773	24	34	242145	176	4
241208	10	33	241432	80	24	241784	68	43	242149	90	24
241208	14	38	241451	56	38	241784	70	38	242149	94	26
241208	18	17	241456	102	15	241785	82	8	242151	115	14
241208	20	14	241459	54	38	241788	80	26	242152	115	15
241208	172	17	241459	56	39	241788	82	9	242153	115	16
241208	174	17	241477	54	39	241806	80	27	242176	68	44
241209	6	34	241477	56	40	241807	80	28	242176	70	39

Part No.	Page No.	Ref. No.
242182	68	45
242182	70	40
242212	26	3
242212	28	4
242229	28	3
242229	175	3
242236	115	26
242246	115	26
242247	115	17
242260	115	27
242268	90	25
242268	94	27
242274	6	40
242274	10	40
242274	14	45
242275	32	15
242275	34	16
242284	115	20
242291	98	19
242293	30	6
242293	169	4
242308	106	3
242313	181	5
242315	24	36
242317	24	37
242322	24	38
242323	24	39
242326	179	3
242333	80	29
242340	30	7
242340	180	5
242342	170	4
242343	170	5
242350	62	18
242378	64	28
242378	66	31
242379	48	21
242386	100	4
242392	98	26
242393	90	26
242393	94	28
242397	115	20
242398	22	32
242408	115	20
242432	62	22
242437	6	41
242437	10	41
242437	14	46
242437	18	20
242437	20	17
242437	172	20
242437	174	20
242439	94	29
242463	72	4
242471	156	6
242471	158	7
242477	156	7
242477	158	8
242477	176	5
242478	156	8
242478	158	9
242478	176	6
242482	18	55
242482	20	16
242482	26	4
242482	28	2
242482	42	10
242482	172	55
242482	175	4
242488	64	30
242488	66	33
242490	86	42
242492	88	14
242494	14	47
242500	2	40
242500	4	45
242504	64	31
242504	66	34
242505	64	32
242505	66	35
242506	64	33
242506	66	36
242509	6	42
242509	10	42
242509	16	48
242509	18	21
242509	172	21
242514	36	2
242517	148	
242517	185	7
242520	84	31
242520	86	43
242521	68	46
242521	70	41
242523	72	5
242524	72	6
242527	16	49
242527	20	48
242527	174	21
242530	16	50
242530	20	49
242530	174	22
242531	16	51
242531	20	50
242531	174	23
242532	84	32
242532	86	44
242533	24	41
242534	6	43
242534	10	43
242534	16	52
242534	18	22
242534	20	18
242534	172	22
242534	174	24
242537	6	44
242537	10	44
242537	16	53
242537	18	23
242537	20	19
242537	172	23
242537	174	25
242553	100	5
242554	62	19
242565	94	30
242568	115	18
242569	22	31
242577	82	10
242582	115	18
242590	115	27
242608	98	20
242610	80	30
242616	84	33
242616	86	45
242617	48	12
242617	161	
242617	184	12
242621	84	34
242622	86	46
242629	36	2
242633	100	5
242636	98	21
242643	86	47
242670	86	48
242672	86	49
242673	86	50
242674	84	35
242674	86	51
242675	2	41
242675	4	46
242675	84	36
242678	84	37
242681	68	47
242681	70	42
242691	68	48
242691	70	43
242693	68	49
242693	70	44
242694	68	50
242694	70	45
242698	2	42
242698	4	47
242702	68	51
242702	70	46
242707	48	13
242707	184	13
242708	48	14
242708	184	14
242712	98	22
242719	170	1
242748	86	53
242752	48	15
242752	184	15
242767	50	17
242767	183	17
242772	50	18
242776	26	5
242779	166	1
242780	166	2
242781	166	3
242784	166	4
242786	166	5
242787	166	6
242788	166	7
242789	166	6
242790	166	7
242796	116	30
242801	30	8
242801	180	6
242804	58	23
242804	60	24
242805	167	2
242807	116	31
242811	116	34
242818	166	8
242819	166	8
242831	6	45
242831	10	45
242831	16	54
242831	18	24
242831	20	20
242831	172	24
242831	174	26
242832	6	46
242832	10	46
242832	16	55
242832	18	25
242832	20	21
242832	172	25
242832	174	27
242833	6	47
242833	10	47
242833	16	56
242833	18	26
242833	20	22
242833	172	26
242833	174	28
242842	156	9
242842	158	10
242842	176	7
242843	2	43
242843	4	30
242851	6	48
242851	10	48
242851	16	57
242851	18	27
242851	20	23
242851	172	27
242851	174	29
242853	6	49
242853	10	49
242853	16	58

NUMERICAL INDEX

NUMERICAL INDEX

Part No.	Page No.	Ref. No.	Part No.	Page No.	Ref. No.	Part No.	Page No.	Ref. No.	Part No.	Page No.	Ref. No.
242853	18	28	242932	190	14	242998	12	60	243062	30	23
242853	20	24	242934	168	7	242998	16	71	243062	169	6
242853	172	28	242937	168	8	243000	8	59	243062	180	17
242853	174	30	242938	168	9	243000	12	61	243063	30	23
242861	6	50	242939	168	10	243000	16	72	243063	169	6
242861	10	50	242942	168	11	243005	20	29	243063	180	17
242861	16	59	242942	190	15	243005	174	36	243075	156	3
242861	18	29	242943	168	12	243006	20	30	243075	158	2
242861	20	25	242944	168	13	243006	174	37	243078	156	4
242861	172	29	242945	168	14	243007	156		243078	158	3
242861	174	31	242946	168	15	243007	158		243080	48	16
242862	8	51	242947	30	11	243007	172	34	243080	184	16
242862	10	51	242947	168	16	243007	174	38	243083	48	17
242862	16	60	242947	180	8	243007	176		243083	184	17
242862	18	30	242948	168	17	243008	8	60	243086	170	6
242862	20	26	242950	8	55	243008	12	62	243100	48	18
242862	172	30	242950	12	55	243008	16	73	243100	184	18
242862	174	32	242950	16	65	243008	18	35	243104	48	19
242863	8	52	242950	18	33	243008	20	32	243104	184	19
242863	12	52	242950	172	33	243008	172	35	243107	48	20
242863	16	61	242951	168	18	243008	174	39	243107	184	20
242863	18	31	242954	168	19	243009	18	36	243117	68	52
242863	20	27	242955	168	20	243009	20	33	243117	70	47
242863	172	31	242956	168	21	243009	172	36	243126	112	1
242863	174	33	242957	168	22	243009	174	40	243179	32	16
242866	30	9	242959	54	44	243011	20	34	243192	76	28
242866	169	5	242959	56	45	243011	174	41	243192	78	22
242866	190	10	242961	168	23	243013	8	61	243199	128	7
242867	30	10	242963	168	24	243013	12	63	243200	128	8
242867	180	7	242964	126	4	243013	16	74	243203	126	5
242873	16	62	242965	126	9	243013	18	37	243204	126	6
242873	174	34	242966	181	6	243013	20	35	243205	126	7
242874	156	10	242970	168	25	243013	172	37	243214	78	23
242874	158	11	242971	8	56	243013	174	42	243226	32	17
242874	176	8	242971	12	56	243014	8	62	243233	32	18
242875	156	11	242971	16	66	243014	12	64	243237	84	41
242875	158	12	242973	168	26	243014	16	75	243238	84	40
242875	176	9	242974	168	27	243014	18	38	243239	84	39
242881	42	11	242975	8	57	243014	20	36	243240	84	38
242884	169	6	242975	12	57	243014	172	38	243248	148	1
242898	8	53	242975	16	67	243014	174	43	243249	148	2
242898	12	53	242976	169	7	243016	80	31	243250	148	3
242898	16	63	242978	168	28	243017	8	63	243263	148	4
242917	8	54	242980	168	29	243017	12	65	243268	32	19
242917	12	54	242981	168	30	243017	16	76	243270	24	40
242917	16	64	242982	168	31	243017	18	39	243284	40	4
242917	18	32	242984	168	32	243017	20	37	243289	40	4
242917	20	28	242985	168	33	243017	172	39	243308	40	
242917	172	32	242986	168	34	243017	174	44	243309	40	
242917	174	35	242990	168	35	243021	168	38	243319	102	16
242921	168	2	242991	168	36	243022	168	39	243321	102	17
242923	168	3	242992	16	68	243029	168	40	243330	170	7
242927	168	4	242993	12	58	243030	168	41	243350	8	65
242927	190	11	242993	16	69	243033	12	66	243350	12	68
242928	168	5	242994	12	59	243033	16	77	243350	14	23
242928	190	12	242994	16	70	243061	30	23	243350	18	40
242930	168	6	242995	168	37	243061	169	6	243350	172	40
242930	190	13	242998	8	58	243061	180	17	243358	8	66

Part No.	Page No.	Ref. No.
243358	12	69
243358	14	47
243358	18	41
243358	172	41
243365	12	70
243365	16	68
243376	179	4
243378	179	5
243383	156	12
243383	158	13
243383	176	10
243385	156	13
243385	158	14
243385	176	11
243386	156	14
243386	158	15
243386	176	12
243391	32	20
243394	32	21
243409	50	19
243409	183	19
243411	50	26
243415	50	20
243415	183	20
243445	8	67
243445	12	71
243445	16	94
243445	18	42
243445	20	38
243445	172	42
243446	12	102
243446	16	95
243446	20	47
243446	24	41
243450	30	12
243450	169	8
243452	30	13
243452	180	9
243453	30	14
243453	180	10
243455	30	15
243456	30	16
243456	180	12
243493	8	68
243493	12	72
243493	14	41
243504	30	17
243504	169	9
243505	30	18
243505	169	10
243512	30	19
243512	180	13
243516	30	20
243516	180	14
243520	30	21
243520	180	15
243526	104	5
243530	30	22
243530	180	16
243533	50	27
243535	30	23
243535	180	17
243536	30	23
243536	180	17
243537	94	19
243546	30	24
243546	180	18
243548	110	5
243548	186	5
243549	110	6
243549	186	6
243550	110	7
243550	186	7
243561	168	51
243567	48	21
243567	184	21
243569	181	7
243591	50	22
243596	50	22
243600	50	22
243604	181	8
243611	181	9
243617	181	10
243659	90	27
243709	168	42
243711	168	43
243712	168	44
243726	32	22
243737	8	69
243737	12	73
243737	18	43
243737	20	39
243737	172	43
243738	8	70
243738	12	74
243738	18	44
243738	20	40
243738	172	44
243741	8	71
243741	12	75
243741	18	45
243741	20	41
243741	172	45
243829	32	23
243830	32	24
243893	185	8
243895	185	9
243898	185	10
243955	36	1
243956	36	3
243958	36	4
243959	36	5
243960	36	7
243961	36	16
243962	36	17
243963	36	18
243964	36	19
243965	36	20
243966	36	21
243970	12	76
243973	12	77
243973	18	56
243973	28	3
243973	172	56
243973	175	3
244056	62	20
244059	62	21
244162	168	45
244212	168	46
244213	168	47
244214	168	48
244238	168	49
244242	168	50
244267	168	51
244269	168	52
244318	22	32
244322	2	45
244322	188	2
244442	158	16
244443	158	17
244444	158	18
244492	26	6
244492	28	9
244492	175	2
244496	8	72
244496	12	78
244496	18	46
244496	172	46
244508	12	79
244508	20	42
244511	74	14
244513	76	20
244513	78	14
244518	152	3
244559	2	44
244559	4	48
244567	90	28
244569	98	24
244572	50	21
244572	80	36
244572	183	21
244574	50	22
244574	183	22
244581	68	53
244582	68	54
244589	68	55
244590	68	56
244601	98	27
244608	2	45
244626	2	46
244650	22	33
244652	80	22
244654	152	4
244655	152	2
244668	169	11
244668	190	16
244674	169	12
244681	8	73
244681	12	80
244681	24	42
244770	8	74
244770	12	81
244802	62	22
244804	156	15
244804	158	19
244806	156	16
244806	158	20
244813	8	75
244813	12	82
244814	8	76
244814	12	83
244815	8	77
244815	12	84
244821	18	47
244821	20	43
244821	172	47
244873	76	21
244878	76	22
244983	66	14
244985	66	15
245012	54	45
245012	56	12
245054	76	23
245055	68	57
245055	76	24
245105	74	15
245105	76	25
245107	74	16
245107	76	26
245149	64	27
245149	66	30
245149	134	
245162	116	30
245163	116	31
245205	189	6
245207	189	7
245211	28	4
245217	8	78
245223	8	79
245224	8	80
245235	8	81
245236	66	27
245238	2	47
245260	190	17
270284	8	82
270284	12	85
270284	16	79
271341	8	83
271341	18	48
271341	172	48
271467	50	26
271502	50	27

NUMERICAL INDEX

Part No.	Page No.	Ref. No.	Part No.	Page No.	Ref. No.	Part No.	Page No.	Ref. No.	Part No.	Page No.	Ref. No.
272662	50	23	650490	172	51	650704	22	39	651041	68	64
272680	50	22	650490	174	45	650704	56	50	651041	70	54
272688	50	24	650494	2	53	650704	62	26	651041	94	34
272688	183	24	650494	4	54	650704	70	51	651042	2	56
272760	185	11	650510	2	54	650704	90	31	651042	4	57
273038	62	23	650510	4	55	650706	50	30	651065	8	90
273181	178	33	650528	32	28	650706	183	30	651065	12	69
274133	102	18	650528	34	18	650725	48	23	651065	12	92
274666	76	27	650535	32	29	650725	68	61	651065	14	47
274666	142		650535	44	16	650725	184	23	651065	18	52
276032	54	46	650535	46	16	650729	42	14	651065	74	20
570002	42	12	650545	190	23	650732	68	62	651065	76	33
570002	44	14	650546	88	17	650732	70	52	651065	78	27
570002	46	14	650548	22	37	650742	42	15	651065	172	52
570005	42	13	650548	32	30	650742	80	33	651067	48	24
612604	54	48	650548	34	19	650745	54	51	651067	184	24
612604	56	46	650548	156	18	650745	56	49	651075	2	57
650196	88	15	650548	156	18	650745	58	29	651075	4	58
650315	178	24	650548	158	22	650745	60	26	651075	189	11
650419	12	86	650548	167	3	650745	88	18	651082	24	49
650419	16	80	650548	176	14	650745	90	32	651094	32	34
650419	102	19	650550	32	31	650745	94	33	651094	34	23
650419	185	12	650550	34	20	650758	24	47	651169	84	43
650426	8	85	650550	98	31	650758	165	5	651192	156	20
650426	12	87	650568	48	22	650771	22	40	651192	158	24
650426	16	81	650568	70	49	650781	68	63	651192	176	15
650426	50	28	650568	184	22	650781	70	53	651270	185	13
650426	88	16	650569	22	38	650809	32	32	651297	58	30
650426	183	28	650569	50	29	650809	34	21	651297	60	27
650437	32	25	650569	183	29	650812	169	16	651307	8	91
650437	34	17	650573	2	55	650812	190	24	651307	12	93
650448	16	81	650573	4	56	650818	80	34	651307	16	85
650448	24	44	650573	30	25	650818	189	10	651307	18	53
650448	96	2	650573	62	25	650834	22	36	651307	20	45
650448	178	25	650573	68	59	650834	22	38	651307	24	50
650449	90	29	650573	70	50	650834	22	41	651307	156	21
650449	94	31	650573	84	42	650835	54	52	651307	158	25
650453	4	53	650573	86	54	650835	56	51	651307	172	53
650453	22	36	650573	92	6	650835	178	34	651307	174	46
650453	32	26	650573	169	15	650835	190	25	651307	176	16
650453	64	34	650573	180	20	650846	24	48	651307	177	9
650453	66	37	650579	8	87	650851	8	88	651307	178	28
650485	64	35	650579	12	89	650851	12	90	651308	8	92
650485	66	38	650579	16	83	650851	16	84	651308	12	94
650485	161	23	650580	88	19	650851	190	26	651308	16	86
650486	44	15	650584	170	9	650859	170	2	651308	18	54
650486	46	15	650588	102	20	650863	32	33	651308	20	46
650486	54	49	650629	44	17	650863	34	22	651308	22	43
650486	56	48	650629	46	17	650878	22	42	651308	24	51
650486	98	30	650629	80	38	650934	50	31	651308	26	8
650486	178	26	650629	82	11	650934	183	31	651308	28	6
650490	8	86	650630	38	4	650943	178	27	651308	84	44
650490	12	88	650630	40	5	650969	8	89	651308	86	55
650490	16	82	650650	44	18	650969	12	91	651308	98	32
650490	18	51	650663	179	7	650980	156	19	651308	166	11
650490	20	44	650687	24	46	650980	158	23	651308	172	54
650490	24	45	650687	90	30	650985	84	45	651308	174	47
650490	32	27	650687	94	32	650985	86	56	651308	175	5

Part No.	Page No.	Ref. No.
651308	190	27
651312	16	87
651347	88	20
651363	26	9
651363	28	7
651366	80	35
651366	110	8
651366	186	8
651394	54	53
651394	56	52
651395	8	93
651395	12	95
651395	16	88
651395	54	54
651395	56	53
651467	178	29
651529	32	35
651529	34	24
651535	54	55
651535	56	54
651564	46	18
651564	52	9
651614	44	10
651614	46	10
651620	64	36
651620	66	39
651640	24	60
651642	179	8
651648	2	58
651648	4	59
651648	50	32
651648	62	27
651648	90	33
651648	94	35
651648	181	11
651648	183	32
651650	2	59
651650	4	60
651650	181	12
651659	24	52
651659	190	28
651660	84	46
651660	86	57
651672	98	33
651688	68	65
651688	72	15
651688	187	15
651732	86	58
651737	46	19
651752	190	29
651771	80	36
651773	54	56
651773	56	57
651775	98	29
651776	8	94
651776	12	96
651776	16	90
651776	62	28
651776	90	34
651776	94	36
651778	170	10
651799	181	13
651803	8	95
651803	12	97
651803	16	89
651807	26	10
651807	28	8
651809	30	26
651809	180	21
651810	30	27
651810	180	22
651811	54	57
651811	56	56
651816	188	3
651821	24	53
651821	190	30
652036	68	66
652036	70	55
652036	72	7
652036	72	16
652036	187	16
652040	24	54
652040	68	67
652040	76	34
652040	78	28
653002	170	11
653007	94	37
653007	168	53
653007	178	31
653010	22	44
653015	190	31
653018	24	55
653018	50	33
653018	183	33
653021	170	3
653034	22	45
653034	90	35
653038	88	21
653053	50	34
653053	183	34
654002	8	96
654002	12	98
654002	16	91
654002	48	25
654002	92	7
654002	170	12
654002	184	25
654004	8	97
654004	12	99
654004	22	46
654004	68	68
654004	70	56
654004	80	37
654004	82	13
654004	84	47
654004	86	59
654004	90	36
654004	94	38
654004	168	54
654004	185	14
654004	190	32
654006	24	56
654006	34	25
654009	22	47
654009	32	36
654012	170	4
654012	189	12
654016	188	4
654024	161	22
654026	178	32
654030	4	61
654030	74	21
654030	76	35
654042	102	21
654042	104	6
654046	2	61
654046	4	62
654046	38	5
654046	40	6
654046	190	33
654049	8	98
654049	12	100
654049	16	92
654049	32	37
654052	168	55
654052	190	34
655006	24	57
656002	54	58
656002	56	55
656006	102	22
656006	104	7
656045	54	59
656045	56	58
656047	190	35
656048	102	23
656090	102	24
656093	54	60
656093	56	60
656093	102	25
656100	30	28
656100	102	26
656100	180	23
656105	54	61
656105	56	66
656123	58	31
656123	60	28
656133	8	99
656133	12	101
656133	16	93
656133	62	29
656154	54	62
656154	56	61
656163	102	27
656171	102	28
656173	54	63
656173	56	62
656179	190	36
807728	108	1
808216	108	1
810146	108	2
810871	108	2
810872	108	2
810949	108	2
810950	108	2
811226	178	
811255	108	3
811277	177	
811294	108	1
811295	108	1
811296	108	2
811297	108	2
811298	108	2
811486	165	
811487	166	
811488	167	
811489	170	
811494	170	
811496	179	
811497	186	
811500	172	
811500	174	
811502	168	
811510	181	
811537	183	
811537	184	
811613	180	
811625	187	
811644	185	
50250022	161	1
50250023	161	2
50250024	161	3
50250025	161	4
50250026	161	5
50250027	161	6
50250028	161	7
50250029	161	8
50250030	161	9
50250031	161	10
50250032	161	11
50250033	161	13
50250034	161	14
50250035	161	15
50250036	161	16
50250037	161	17
50250038	161	18
50250039	161	19
50250040	161	20
50250041	161	21
50280056	142	1
50280057	142	2
50300766	52	6
50300777	52	7

NUMERICAL INDEX

Part No.	Page No.	Ref. No.
50301000	64	3
50301000	66	3
50350018	169	13
50350077	189	8
50350078	189	9
50350107	50	26
50350107	183	26
50350108	50	27
50350108	183	27
50350139	190	18
50350153	2	51
50350159	190	19
50350203	88	12
50350278	92	4
50350283	22	35
50350290	92	5
50350300	190	20
50350313	190	21
50350325	102	10
50350357	42	3
50350369	24	43
50350374	76	28
50350790	54	47
50350790	56	26
50350877	58	27
50350880	58	28
50351006	64	27
50351006	66	30
50351006	134	
50351041	8	84
50351041	18	49
50351041	172	49
50351045	18	50
50351045	172	50
50351121	68	33
50351212	112	2
50351214	112	3
50351222	80	36
50351222	82	12
50351233	112	4
50351237	112	5
50351238	112	6
50351264	112	7
50351312	98	26
50351313	98	27
50351322	115	16
50351408	156	5
50351485	44	12
50351499	162	1
50351505	162	2
50351506	162	3
50351821	52	8
50352101	62	24
50352302	56	30
50352302	74	17
50352303	54	30
50352303	56	29
50352307	76	29
50352307	78	25
50352308	76	30
50352308	78	24
50352352	169	14
50352352	180	19
50352380	148	1
50352381	84	26
50352381	86	33
50352381	148	
50352408	98	28
50352593	44	13
50352642	126	8
50352655	126	9
50352710	180	11
50352739	80	13
50352739	82	3
50352739	182	
50352741	74	18
50352741	76	31
50352793	58	25
50352909	80	13
50352909	82	3
50352909	182	
50352910	80	13
50352910	82	3
50352910	182	
50352912	80	13
50352912	82	3
50352912	182	
50352914	80	13
50352914	82	3
50352914	182	
50353122	166	9
50353125	166	10
50353150	58	26
50353195	58	27
50353203	58	28
50353330	170	8
50353710	183	18
50353711	183	23
50353716	134	1
50353716	136	
50353717	134	2
50353717	136	
50353718	134	8
50353719	134	9
50353721	134	3
50353721	134	4
50353722	134	7
50353723	134	22
50353724	134	23
50353725	136	3
50353726	136	3
50353727	136	13
50353727	136	13
50353728	136	16
50353728	136	16
50353729	136	15
50353729	136	15
50353730	136	2
50353730	136	2
50353731	136	1
50353732	136	1
50657002	167	4
50657011	190	22
50657014	74	19
50657014	76	32
50657022	98	29
50657031	26	7
50657031	28	5
50850001	188	
50850048	189	
50850116	190	
010-28854	52	1
010-32401	52	2
030-31842	54	1
030-31842	56	1
030-31934	2	1
030-31934	4	1
030-31934	110	1
030-31934	186	1
040-33643	22	1
090-28749	2	8
090-28749	4	9
090-30303	86	9
170-34119	68	26
170-34119	70	22
170-35039	80	12
210-19469	22	25
210-19469	84	25
210-19469	86	31
210-19470	2	26
210-19470	4	26
210-19470	6	29
210-19470	10	29
210-19470	24	19
210-19470	30	3
210-19470	36	1
210-19470	54	34
210-19470	56	34
210-19470	74	12
210-19470	76	16
210-19470	78	17
210-19470	86	32
210-19470	88	11
210-19470	92	2
210-19470	98	14
210-19470	169	3
210-19470	180	2
210-19470	181	4
210-19530	32	11
210-32183	178	21
210-32183	179	2
210-32184	156	2
220-20554	22	42
220-32536	22	26
230-24749	24	20
230-24749	64	21
230-24749	66	23
310-32288	178	22
310-32411	50	25
310-32411	178	23
310-32411	183	25
310-32564	92	3
310-32585	2	48
310-32585	4	49
310-32626	4	50
320-32692	52	5
350-27299	146	1
350-32539	52	6
350-32542	52	7
360-32599	2	49
360-32599	4	51
390-15909	68	58
390-15909	70	48
390-15909	80	32
400-32513	52	8
400-32514	52	9
400-32515	52	10
400-32521	52	11
400-32522	52	12
400-32523	52	13
400-32555	52	14
400-32556	52	15
420-13731	22	34
420-34933	2	50
420-34933	4	52
420-35135	58	24
420-35135	60	25
420-36086	38	3
420-36087	38	3
420-36134	156	17
420-36134	158	21
420-36134	176	13
425-36233	62	31
H8049	44	11
H8049	46	11
L500595	156	6
L500595	158	4
L500668	126	1
L500668	128	1
L500696	30	29
L500696	180	24
L500697	30	30
L500697	180	25
L500700	30	31
L500700	180	26
L500706	30	32
L500706	180	27
L500708	30	33
L500708	180	28
L500709	30	34
L500709	180	29
L500711	30	35

Part No.	Page No.	Ref. No.	Part No.	Page No.	Ref. No.	Part No.	Page No.	Ref. No.	Part No.	Page No.	Ref. No.
L500711	180	30									
L50081	54	64									
L50081	56	63									
L70486	2	62									
L70486	4	63									
L75990	58	32									
P470989	68	19									
P471548	64	37									
P471548	66	40									

O-Ring Table — Air Conditioning Fittings

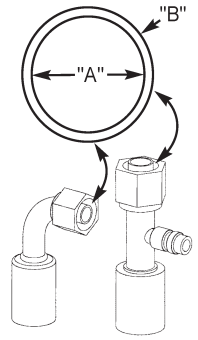

A/C Fitting	Diameter "A"	Diameter "B"	Part Number
A/C #6	0.312	0.453	138777
A/C #8	0.437	0.578	138778
A/C #10	0.562	0.703	138779

O-RING TABLE - FACE SEAL FITTINGS

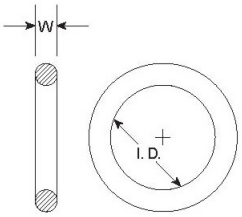

FITTING THREAD SIZE	TUBE O.D.	W WIDTH	I.D.	GEHL PN
9/16-18	1/4	0.070	0.301	50300165
11/16-16	3/8	0.070	0.364	50300166
13/16-16	1/2	0.070	0.489	50300167
1-14	5/8	0.070	0.614	135124
1-3/16-12	3/4	0.070	0.739	137205
1-7/16-12	1	0.070	0.926	50300168

O-RING TABLE - MALE BOSS FITTINGS

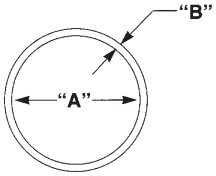

FITTING THREAD SIZE	DIAMETER "A"	DIAMETER "B"	GEHL PART NUMBER
9/16 - 18	0.468	0.078	055897
3/4 - 16	0.644	0.087	055896
7/8 - 14	0.755	0.097	055898
1-1/16 - 12	0.924	0.116	048953
1-5/16 - 12	1.171	0.116	058674
1-5/8 - 12	1.475	0.118	077970

Recommended Coupling & Adapter Installation Torque Specifications

For SAE "0" Ring Boss (Steel)

Size		Ft-Lbs	
Dash	Fractional	Minimum	Maximum
-3	3/16	8	10
-4	1/4	14	16
-5	5/16	18	20
-6	3/8	24	26
-8	1/2	50	60
-10	5/8	72	80
-12	3/4	125	135
-14	7/8	160	180
-16	1	200	220
-20	1-1/4	210	280
-24	1-1/2	270	360

For JIC 37° and 45° (Machined or Flared)

Steel			
Size		Ft-Lbs	
Dash	Fractional	Minimum	Maximum
-4	1/4	10	11
-5	5/16	13	15
-6	3/8	17	19
-8	1/2	34	38
-10	5/8	50	56
-12	3/4	70	78
-16	1	94	104
-20	1-1/4	124	138
-24	1-1/2	156	173
-32	2	219	243

TORQUE SPECIFICATIONS

Use these torque values when tightening hardware (excluding locknuts, and self-tapping, thread-forming, and sheet metal screws) unless otherwise specified.

UNIFIED NATIONAL THREAD	GRADE 2		GRADE 5		GRADE 8	
	DRY	LUBED	DRY	LUBED	DRY	LUBED
8-32	19*	14*	30*	22*	41*	31*
8-36	20*	15*	31*	23*	43*	32*
10-24	27*	21*	43*	32*	60*	45*
10-32	31*	23*	49*	36*	68*	51*
1/4-20	66*	50*	9	75*	12	9
1/4-28	76*	56*	10	86*	14	10
5/16-18	11	9	17	13	25	18
5/16-24	12	9	19	14	25	20
3/8-16	20	15	30	23	45	35
3/8-24	23	17	35	25	50	35
7/16-14	32	24	50	35	70	55
7/16-20	36	27	55	40	80	60
1/2-13	50	35	75	55	110	80
1/2-20	55	40	90	65	120	90
9/16-12	70	55	110	80	150	110
9/16-18	80	60	120	90	170	130
5/8-11	100	75	150	110	220	170
5/8-18	110	85	180	130	240	180
3/4-10	175	130	260	200	380	280
3/4-16	200	150	300	220	420	320
7/8-9	170	125	430	320	600	460
7/8-14	180	140	470	360	660	500
1-8	250	190	640	480	900	680
1-12	270	210	710	530	1000	740

METRIC COARSE THREAD	GRADE 8.8		GRADE 10.9		GRADE 12.9	
	DRY	LUBED	DRY	LUBED	DRY	LUBED
M6-1	8	6	11	8	13.5	10
M8-1.25	19	14	27	20	32.5	24
M10-1.5	37.5	28	53	39	64	47
M12-1.75	65	48	91.5	67.5	111.5	82
M14-2	103.5	76.5	145.5	108	176.5	131
M16-2	158.5	117.5	223.5	165.5	271	200

*All torque values are in ft-lbs except those marked with an * which are in lbs.
For metric torque value (N·m) multiply ft-lbs value by 1.355 or the in-lbs value by 0.113.

Manitou Americas, Inc.
One Gehl Way, P.O. Box 179, West Bend, WI 53095-0179 USA
www.gehl.com

917376/HP0513

© 2013 MANITOU AMERICAS, INC.
All Rights Reserved.

PRINTED IN USA