Genie®

A TEREX BRAND

Service Manual

Serial Number Range

S-60
S-65
S-60 HC

from S6003-9154
to S6007-14781

Part No. 77828

Rev E1

January 2013

Introduction

Important

Read, understand and obey the safety rules and operating instructions in the *Genie S-60 and Genie S-65 Operator's Manual* or the *Genie S-60 HC Operator's Manual* before attempting any maintenance or repair procedure.

This manual provides detailed scheduled maintenance information for the machine owner and user. It also provides troubleshooting fault codes and repair procedures for qualified service professionals.

Basic mechanical, hydraulic and electrical skills are required to perform most procedures. However, several procedures require specialized skills, tools, lifting equipment and a suitable workshop. In these instances, we strongly recommend that maintenance and repair be performed at an authorized Genie dealer service center.

Compliance

Machine Classification
Group B/Type 3 as defined by ISO 16368

Machine Design Life
Unrestricted with proper operation, inspection and scheduled maintenance.

Technical Publications

Genie has endeavored to deliver the highest degree of accuracy possible. However, continuous improvement of our products is a Genie policy. Therefore, product specifications are subject to change without notice.

Readers are encouraged to notify Genie of errors and send in suggestions for improvement. All communications will be carefully considered for future printings of this and all other manuals.

Contact Us:

http://www.genielift.com
e-mail: awp.techpub@terex.com

Serial Number Information

Genie offers the following Service Manuals for these models:

Title	Part No.
S-60 and S-65 Service Manual (before serial number 2575)	34476
S-60 and S-65 Service Manual (from serial number 2575 to 6623)	48412
S-60 and S-65 Service Manual (from serial number 6624 to 9153)	65196
S-60 and S-65 Service Manual (from serial number 14782 to 21000)	139188
S-60, S-65, S60 HC and TRAX Service Manual (from serial number 21001)	147753

Copyright © 2011 Terex Corporation

77828 Rev E February 2012
Fourth Edition, Fifth Printing

"Genie" and "S" are registered trademarks of Terex South Dakota, Inc. in the USA and many other countries.

Printed on recycled paper

Printed in U.S.A.

Revision History

Revision	Date	Section	Procedure / Schematic Page / Description
E	2/2012	Introduction	Revision History Added
		3 - Maint.	3-1
E1	1/2013	3 - maint.	3-6, E-4

REFERENCE EXAMPLES:

Kubota Engine_Section 2_Specifications.
A-6,B-3,C-7_Section 3_Maintenance Procedure.
3-2, 6-4, 9-1_Section 4_Repair Procedure.
Fault Codes_Section 5.
6-35, 6-56, 6-104_Section 6_Schematic Page #.

Electronic Version

Click on any procedure or page number highlighted in blue to view the update.

REVISION HISTORY, CONTINUED

Revision	Date	Section	Procedure / Schematic Page / Description

REFERENCE EXAMPLES:

Kubota Engine_Section 2_Specifications.
A-6,B-3,C-7_Section 3_Maintenance Procedure.
3-2, 6-4, 9-1_Section 4_Repair Procedure.
Fault Codes_Section 5.
6-35, 6-56, 6-104_Section 6_Schematic Page #.

Electronic Version

Click on any procedure or page number highlighted in blue to view the update.

Serial Number Legend

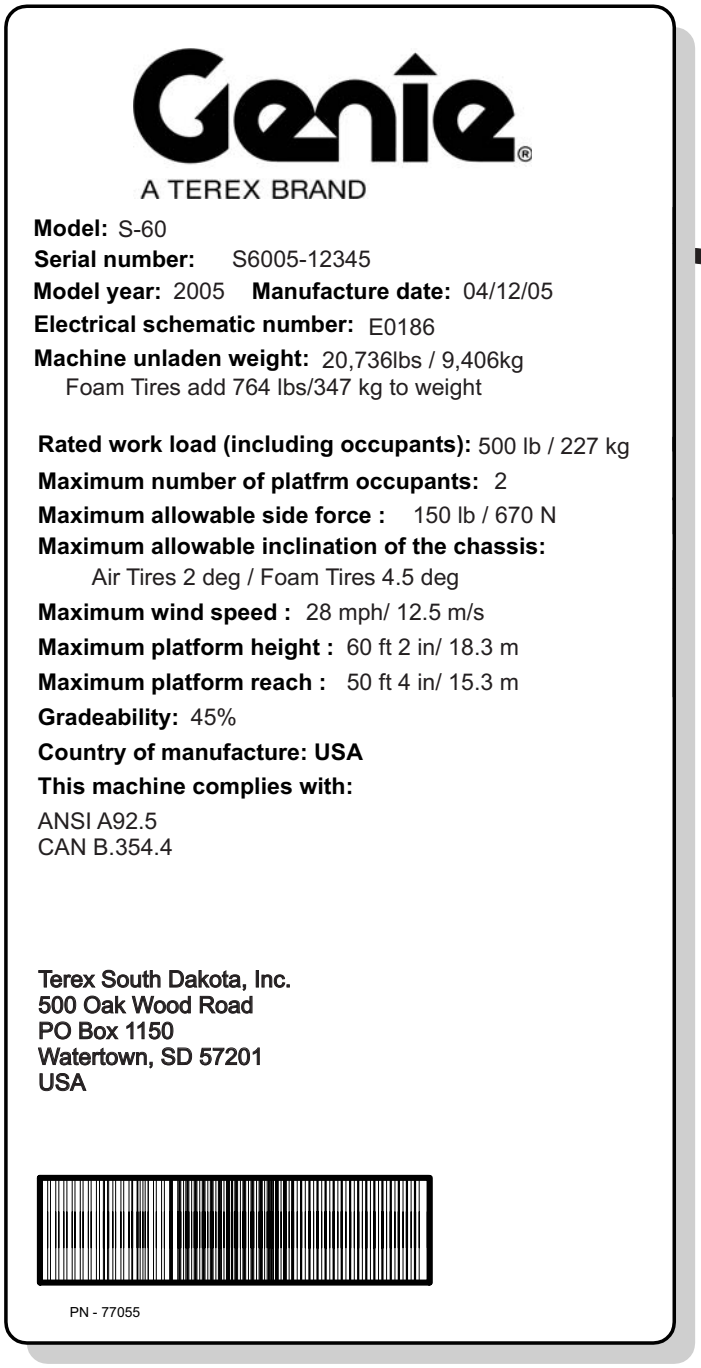

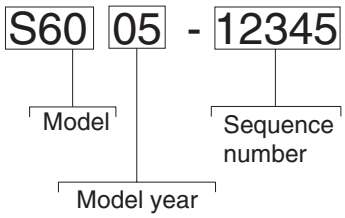

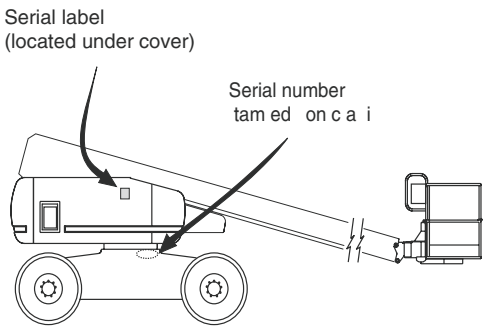

Safety Rules

Danger

Failure to obey the instructions and safety rules in this manual, and the *Genie S-60 and Genie S-65 Operator's Manual* or the *Genie S-60 HC Operator's Manual* will result in death or serious injury.

Many of the hazards identified in the operator's manual are also safety hazards when maintenance and repair procedures are performed.

Do Not Perform Maintenance Unless:

- ☑ You are trained and qualified to perform maintenance on this machine.
- ☑ You read, understand and obey:
  - manufacturer's instructions and safety rules
  - employer's safety rules and worksite regulations
  - applicable governmental regulations
- ☑ You have the appropriate tools, lifting equipment and a suitable workshop.

Personal Safety

Any person working on or around a machine must be aware of all known safety hazards. Personal safety and the continued safe operation of the machine should be your top priority.

Read each procedure thoroughly. This manual and the decals on the machine use signal words to identify the following:

Safety alert symbol—used to alert personnel to potential personal injury hazards. Obey all safety messages that follow this symbol to avoid possible injury or death.

⚠DANGER Indicates an imminently hazardous situation which, if not avoided, will result in death or serious injury.

⚠WARNING Indicates a potentially hazardous situation which, if not avoided, could result in death or serious injury.

⚠CAUTION Indicates a potentially hazardous situation which, if not avoided, may result in minor or moderate injury.

NOTICE Indicates a potentially hazardous situation which, if not avoided, may result in property damage.

Be sure to wear protective eye wear and other protective clothing if the situation warrants it.

Be aware of potential crushing hazards such as moving parts, free swinging or unsecured components when lifting or placing loads. Always wear approved steel-toed shoes.

SAFETY RULES

Workplace Safety

Be sure to keep sparks, flames and lighted tobacco away from flammable and combustible materials like battery gases and engine fuels. Always have an approved fire extinguisher within easy reach.

Be sure that all tools and working areas are properly maintained and ready for use. Keep work surfaces clean and free of debris that could get into machine components and cause damage.

Be sure any forklift, overhead crane or other lifting or supporting device is fully capable of supporting and stabilizing the weight to be lifted. Use only chains or straps that are in good condition and of ample capacity.

Be sure that fasteners intended for one time use (i.e., cotter pins and self-locking nuts) are not reused. These components may fail if they are used a second time.

Be sure to properly dispose of old oil or other fluids. Use an approved container. Please be environmentally safe.

Be sure that your workshop or work area is properly ventilated and well lit.

Table of Contents

Introduction

Important Information ..... *ii*
Serial Number Information ..... *ii*
Revision History ..... *iii*
Serial Number Legend ..... *v*

Section 1 **Safety Rules**

General Safety Rules ..... *vi*

Section 2 **Specifications**

Machine Specifications ..... 2 - 1
Performance Specifications ..... 2 - 2
Hydraulic Specifications ..... 2 - 3
Manifold Component Specifications ..... 2 - 4
GM 3.0L Engine Specifications ..... 2 - 5
Ford LRG-425 EFI Engine Specifications ..... 2 - 6
Ford DSG-423 EFI Engine Specifications ..... 2 - 7
Deutz F3L-2011 Engine Specifications ..... 2 - 8
Perkins 404-22 Engine Specifications ..... 2 - 10
Machine Torque Specifications ..... 2 - 11
Hydraulic Hose and Fitting Torque Specifications ..... 2 - 12
SAE and Metric Fasteners Torque Charts ..... 2 - 13

TABLE OF CONTENTS

Section 3 **Scheduled Maintenance Procedures**

Introduction ..... 3 - 1

Pre-Delivery Preparation ..... 3 - 3

Maintenance Inspection Report ..... 3 - 5

Checklist A Procedures

A-1 Inspect the Manuals and Decals ..... 3 - 7

A-2 Perform Pre-operation Inspection ..... 3 - 8

A-3 Perform Function Tests ..... 3 - 8

A-4 Perform Engine Maintenance ..... 3 - 9

A-5 Check the High Pressure Hydraulic Filter Condition Indicator ..... 3 - 9

A-6 Test the Oscillate Axle (if equipped) ..... 3 - 10

A-7 Perform 30 Day Service ..... 3 - 10

A-8 Inspect the Engine Air Filter - GM Models ..... 3 - 11

A-9 Perform Engine Maintenance - GM, Ford and Perkins Models ..... 3 - 11

A-10 Inspect the Fuel Filter/Water Separator - Diesel Models ..... 3 - 12

A-11 Check and Adjust the Engine RPM - Perkins Models ..... 3 - 14

A-12 Grease the Turntable Rotation Bearing and Rotate Gear ..... 3 - 15

A-13 Replace the Drive Hub Oil ..... 3 - 15

A-14 Perform Engine Maintenance - GM and Ford Models ..... 3 - 16

A-15 Perform Engine Maintenance - Perkins Models ..... 3 - 16

TABLE OF CONTENTS

Section 3 **Scheduled Maintenance Procedures**, continued

Checklist B Procedures

B-1 Inspect the Battery ..... 3 - 17
B-2 Inspect the Electrical Wiring ..... 3 - 18
B-3 Check the Exhaust System ..... 3 - 19
B-4 Inspect the Engine Air Filter - Ford, Deutz and Perkins Models ..... 3 - 20
B-5 Check the Oil Cooler and Cooling Fins - Deutz Models ..... 3 - 20
B-6 Inspect the Tires, Wheels and Lug Nut Torque ..... 3 - 21
B-7 Confirm the Proper Brake Configuration ..... 3 - 22
B-8 Check the Drive Hub Oil Level and Fastener Torque ..... 3 - 22
B-9 Check and Adjust the Engine RPM - Ford and Deutz Models ..... 3 - 24
B-10 Test the Ground Control Override ..... 3 - 25
B-11 Check the Oscillate Directional Valve Linkage ..... 3 - 26
B-12 Test the Platform Self-leveling ..... 3 - 26
B-13 Test the Engine Idle Select ..... 3 - 27
B-14 Test the Fuel Select Operation - GM and Ford Models ..... 3 - 28
B-15 Test the Drive Brakes ..... 3 - 29
B-16 Test the Drive Speed - Stowed Position ..... 3 - 30
B-17 Test the Drive Speed - Raised or Extended Position ..... 3 - 30
B-18 Test the Alarm Package - Optional Equipment ..... 3 - 31
B-19 Perform Hydraulic Oil Analysis ..... 3 - 32
B-20 Inspect the Fuel and Hydraulic Tank Cap Venting Systems ..... 3 - 33
B-21 Replace the Fuel Filter Element - Perkins Models ..... 3 - 34
B-22 Inspect the Boom Extend/Retract Cables ..... 3 - 35
B-23 Perform Engine Maintenance - Deutz Models ..... 3 - 37
B-24 Perform Engine Maintenance - GM and Ford Models ..... 3 - 37
B-25 Replace the Engine Air Filter Element - GM and Ford models ..... 3 - 38
B-26 Perform Engine Maintenance - Perkins Models ..... 3 - 38

TABLE OF CONTENTS

Section 3 **Scheduled Maintenance Procedures**, continued

Checklist C Procedures

C-1 Perform Engine Maintenance - Deutz Models ..... 3 - 39
C-2 Grease the Platform Overload Mechanism, S-60 and S-65 (if equipped) ..... 3 - 39
C-3 Test the Platform Overload System, S-60 and S-65 (if equipped) ..... 3 - 40
C-4 Test the Platform Load Sense System, S60 HC ..... 3 - 43
C-5 Replace the Fuel Filter/Water Separator Element - Perkins Models ..... 3 - 45
C-6 Replace the Engine Air Filter Element - Deutz and Perkins Models ..... 3 - 47
C-7 Perform Engine Maintenance - Perkins Models ..... 3 - 47
C-8 Perform Engine Maintenance - GM and Ford Models ..... 3 - 48

Checklist D Procedures

D-1 Check the Boom Wear Pads ..... 3 - 49
D-2 Check the Turntable Rotation Bearing Bolts ..... 3 - 50
D-3 Inspect for Turntable Bearing Wear ..... 3 - 51
D-4 Replace the Drive Hub Oil ..... 3 - 52
D-5 Check the Free-wheel Configuration ..... 3 - 53
D-6 Replace the Hydraulic Filters ..... 3 - 54
D-7 Check and Adjust the Air/LPG Mixture - GM Models ..... 3 - 56
D-8 Perform Engine Maintenance - Deutz Models ..... 3 - 57

Checklist E Procedures

E-1 Test or Replace the Hydraulic Oil ..... 3 - 58
E-2 Perform Engine Maintenance - Deutz Models ..... 3 - 60
E-3 Perform Engine Maintenance - Deutz Models ..... 3 - 60
E-4 Remove and Inspect the Boom Extend/Retract Cables ..... 3 - 61

TABLE OF CONTENTS

Section 4 **Repair Procedures**

Introduction ..... 4 - 1

Platform Controls

1-1 ALC-500 Circuit Board ..... 4 - 2

1-2 Joysticks ..... 4 - 3

Platform Components

2-1 Platform Leveling Slave Cylinder ..... 4 - 8

2-2 Platform Rotator ..... 4 - 9

2-3 Platform Overload System, S-60 and S-65 (if equipped) ..... 4 - 12

2-4 Platform Load Sense System, S-60 HC ..... 4 - 14

Jib Boom Components, S-65

3-1 Jib Boom ..... 4 - 18

3-2 Jib Boom Lift Cylinder ..... 4 - 19

Boom Components

4-1 Cable Track ..... 4 - 20

4-2 Boom ..... 4 - 26

4-3 Boom Lift Cylinder ..... 4 - 28

4-4 Boom Extension Cylinder ..... 4 - 29

4-5 Boom Extend/Retract Cables ..... 4 - 32

4-6 Platform Leveling Master Cylinder ..... 4 - 35

TABLE OF CONTENTS

Section 4 **Repair Procedures,** continued

Engines

5-1 RPM Adjustment - Ford and Deutz Models ..... 4 - 36
5-2 RPM Adjustment - Perkins Models ..... 4 - 36
5-3 Flex Plate ..... 4 - 36
5-4 Engine Fault Codes - GM and Ford Models ..... 4 - 43

Hydraulic Pumps

6-1 Function Pump ..... 4 - 44
6-2 Drive Pump ..... 4 - 45

Manifolds

7-1 Function Manifold Components ..... 4 - 49
7-2 Valve Adjustments - Function Manifold ..... 4 - 53
7-3 Jib Boom / Platform Rotate Manifold Components ..... 4 - 54
7-4 Brake/Two-speed Manifold Components ..... 4 - 55
7-5 Turntable Rotation Manifold Components ..... 4 - 56
7-6 Oscillate Directional Valve Components ..... 4 - 57
7-7 Valve Adjustments - Oscillate Relief Valve ..... 4 - 59
7-8 Drive Oil Diverter Manifold Components (welder option) ..... 4 - 60
7-9 Traction Manifold Components, 2WD ..... 4 - 61
7-10 Valve Adjustments, 2WD Traction Manifold ..... 4 - 63
7-11 Traction Manifold Components, 4WD ..... 4 - 65
7-12 Valve Adjustments, 4WD Traction Manifold ..... 4 - 67
7-13 Valve Coils ..... 4 - 68

Turntable Rotation Components

8-1 Turntable Rotation Assembly ..... 4 - 70

Axle Components

9-1 Oscillate Axle Cylinders ..... 4 - 72

TABLE OF CONTENTS

Section 5 **Fault Codes**

Introduction ..... 5 - 1

Fault Codes - Control System ..... 5 - 2

Fault Codes - Ford LRG-425 EFI Engine ..... 5 - 6

Fault Codes - Ford DSG-423 EFI Engine ..... 5 - 12

Fault Codes - Platform Load Sense System, S-60 HC ..... 5 - 16

Section 6 **Schematics**

Introduction ..... 6 - 1

Electrical Symbols Legend ..... 6 - 2

Hydraulic Symbols Legend ..... 6 - 3

Ford Engine Relay Layout ..... 6 - 4

Limit Switch Location Legend ..... 6 - 5

Electrical Schematic,
S-60 HC (from serial number 12800) ..... 6 - 7

Chassis Wiring Diagram,
S-60 HC (from serial number 12800) ..... 6 - 8

Ground Control Box Terminal Strip Wiring Diagram,
S-60 HC (from serial number 12800) ..... 6 - 9

Platform Control Box Wiring Diagram,
S-60 HC (from serial number 12800) ..... 6 - 10

GM 3.0L Engine Harness ..... 6 - 11

Ford LRG-425 EFI Engine Harness ..... 6 - 12

Ford DSG-423 EFI Engine Harness ..... 6 - 13

TABLE OF CONTENTS

Section 6 **Schematics,** continued

Electrical Schematic, S-60, GM 3.0L Models ..... 6 - 14

Ground Control Box Terminal Strip Wiring Diagram,
S-60, GM 3.0L Models ..... 6 - 16

Ground Control Box Switch Panel Wiring Diagram,
S-60, GM 3.0L Models ..... 6 - 17

Platform Control Box Terminal Strip Wiring Diagram,
S-60, GM 3.0L Models ..... 6 - 18

Platform Control Box Switch Panel Wiring Diagram,
S-60, GM 3.0L Models ..... 6 - 19

Electrical Schematic, S-65, GM 3.0L Models ..... 6 - 20

Ground Control Box Terminal Strip Wiring Diagram,
S-65, GM 3.0L Models ..... 6 - 22

Ground Control Box Switch Panel Wiring Diagram,
S-65, GM 3.0L Models ..... 6 - 23

Platform Control Box Terminal Strip Wiring Diagram,
S-65, GM 3.0L Models ..... 6 - 24

Platform Control Box Switch Panel Wiring Diagram,
S-65, GM 3.0L Models ..... 6 - 25

Electrical Schematic, S-60, Ford LRG-425 EFI Models
(before serial number 11880) ..... 6 - 26

Electrical Schematic, S-60, Ford LRG-425 EFI Models
(from serial number 11880 to 14053) ..... 6 - 28

Electrical Schematic, S-60, Ford DSG-423 EFI Models
(after serial number 14053) ..... 6 - 30

Ground Control Box Terminal Strip Wiring Diagram,
S-60, Ford LRG-425 EFI Models (before serial number 11880) ..... 6 - 32

Ground Control Box Switch Panel Wiring Diagram,
S-60, Ford LRG-425 EFI Models (before serial number 11880) ..... 6 - 33

TABLE OF CONTENTS

Section 6 **Schematics,** continued

Ground Control Box Terminal Strip Wiring Diagram,
S-60, Ford Models (after serial number 11879) ..... 6 - 34

Ground Control Box Switch Panel Wiring Diagram,
S-60, Ford Models (after serial number 11879) ..... 6 - 35

Platform Control Box Terminal Strip Wiring Diagram,
S-60, Ford Models ..... 6 - 36

Platform Control Box Switch Panel Wiring Diagram,
S-60, Ford Models ..... 6 - 37

Electrical Schematic, S-65, Ford LRG-425 EFI Models
(before serial number 11880) ..... 6 - 38

Electrical Schematic, S-65, Ford LRG-425 EFI Models
(from serial number 11880 to 14053) ..... 6 - 40

Electrical Schematic, S-65, Ford DSG-423 EFI Models
(after serial number 14053) ..... 6 - 42

Ground Control Box Terminal Strip Wiring Diagram,
S-65, Ford LRG-425 EFI Models (before serial number 11880) ..... 6 - 44

Ground Control Box Switch Panel Wiring Diagram,
S-65, Ford LRG-425 EFI Models (before serial number 11880) ..... 6 - 45

Ground Control Box Terminal Strip Wiring Diagram,
S-65, Ford Models (after serial number 11879) ..... 6 - 46

Ground Control Box Switch Panel Wiring Diagram,
S-65, Ford Models (after serial number 11879) ..... 6 - 47

Platform Control Box Terminal Strip Wiring Diagram,
S-65, Ford Models ..... 6 - 48

Platform Control Box Switch Panel Wiring Diagram,
S-65, Ford Models ..... 6 - 49

Section 6 **Schematics,** continued

Electrical Schematic, S-60, Deutz F3L-2011 Models
(before serial number 11880) ..... 6 - 50

Electrical Schematic, S-60, Deutz F3L-2011 Models
(after serial number 11879) ..... 6 - 52

Electrical Schematic, S-60, CE Models, Deutz F3L-2011 Models
(before serial number 11880) ..... 6 - 54

Electrical Schematic, S-60, CE Models, Deutz F3L-2011 Models
(after serial number 11879) ..... 6 - 56

Ground Control Box Terminal Strip Wiring Diagram,
S-60, Deutz F3L-2011 Models (before serial number 11880) ..... 6 - 58

Ground Control Box Switch Panel Wiring Diagram,
S-60, Deutz F3L-2011 Models (before serial number 11880) ..... 6 - 59

Ground Control Box Terminal Strip Wiring Diagram,
S-60, Deutz F3L-2011 Models (after serial number 11879) ..... 6 - 60

Ground Control Box Switch Panel Wiring Diagram,
S-60, Deutz F3L-2011 Models (after serial number 11879) ..... 6 - 61

Ground Control Box Terminal Strip Wiring Diagram,
S-60, CE Models, Deutz F3L-2011 Models
(before serial number 11880) ..... 6 - 62

Ground Control Box Switch Panel Wiring Diagram,
S-60, CE Models, Deutz F3L-2011 Models
(before serial number 11880) ..... 6 - 63

Ground Control Box Terminal Strip Wiring Diagram,
S-60, CE Models, Deutz F3L-2011 Models
(after serial number 11879) ..... 6 - 64

Ground Control Box Switch Panel Wiring Diagram,
S-60, CE Models, Deutz F3L-2011 Models
(after serial number 11879) ..... 6 - 65

Platform Control Box Terminal Strip Wiring Diagram,
S-60, Deutz F3L-2011 Models ..... 6 - 66

Platform Control Box Switch Panel Wiring Diagram,
S-60, Deutz F3L-2011 Models ..... 6 - 67

TABLE OF CONTENTS

Section 6 **Schematics,** continued

Electrical Schematic, S-65, Deutz F3L-2011 Models (before serial number 11880) ..... 6 - 68

Electrical Schematic, S-65, Deutz F3L-2011 Models (after serial number 11879) ..... 6 - 70

Electrical Schematic, S-65, CE Models, Deutz F3L-2011 Models (before serial number 11880) ..... 6 - 72

Electrical Schematic, S-65, CE Models, Deutz F3L-2011 Models (after serial number 11879) ..... 6 - 74

Ground Control Box Terminal Strip Wiring Diagram, S-65, Deutz F3L-2011 Models (before serial number 11880) ..... 6 - 76

Ground Control Box Switch Panel Wiring Diagram, S-65, Deutz F3L-2011 Models (before serial number 11880) ..... 6 - 77

Ground Control Box Terminal Strip Wiring Diagram, S-65, Deutz F3L-2011 Models (after serial number 11879) ..... 6 - 78

Ground Control Box Switch Panel Wiring Diagram, S-65, Deutz F3L-2011 Models (after serial number 11879) ..... 6 - 79

Ground Control Box Terminal Strip Wiring Diagram, S-65, CE Models, Deutz F3L-2011 Models (before serial number 11880) ..... 6 - 80

Ground Control Box Switch Panel Wiring Diagram, S-65, CE Models, Deutz F3L-2011 Models (before serial number 11880) ..... 6 - 81

Ground Control Box Terminal Strip Wiring Diagram, S-65, CE Models, Deutz F3L-2011 Models (after serial number 11879) ..... 6 - 82

Ground Control Box Switch Panel Wiring Diagram, S-65, CE Models, Deutz F3L-2011 Models (after serial number 11879) ..... 6 - 83

TABLE OF CONTENTS

Section 6 **Schematics,** continued

Platform Control Box Terminal Strip Wiring Diagram,
S-65, Deutz F3L-2011 Models ..... 6 - 84

Platform Control Box Switch Panel Wiring Diagram,
S-65, Deutz F3L-2011 Models ..... 6 - 85

Electrical Schematic, S-60, Perkins 404-22 Models
(before serial number 11880) ..... 6 - 86

Electrical Schematic, S-60, Perkins 404-22 Models
(after serial number 11879) ..... 6 - 88

Ground Control Box Terminal Strip Wiring Diagram,
S-60, Perkins 404-22 Models (before serial number 11880) ..... 6 - 90

Ground Control Box Switch Panel Wiring Diagram,
S-60, Perkins 404-22 Models (before serial number 11880) ..... 6 - 91

Ground Control Box Terminal Strip Wiring Diagram,
S-60, Perkins 404-22 Models (after serial number 11879) ..... 6 - 92

Ground Control Box Switch Panel Wiring Diagram,
S-60, Perkins 404-22 Models (after serial number 11879) ..... 6 - 93

Platform Control Box Terminal Strip Wiring Diagram,
S-60, Perkins 404-22 Models ..... 6 - 94

Platform Control Box Switch Panel Wiring Diagram,
S-60, Perkins 404-22 Models ..... 6 - 95

Electrical Schematic, S-65, Perkins 404-22 Models
(before serial number 11880) ..... 6 - 96

Electrical Schematic, S-65, Perkins 404-22 Models
(after serial number 11879) ..... 6 - 98

Ground Control Box Terminal Strip Wiring Diagram,
S-65, Perkins 404-22 Models (before serial number 11880) ..... 6 - 100

Ground Control Box Switch Panel Wiring Diagram,
S-65, Perkins 404-22 Models (before serial number 11880) ..... 6 - 101

TABLE OF CONTENTS

Section 6 **Schematics,** continued

Ground Control Box Terminal Strip Wiring Diagram,
S-65, Perkins 404-22 Models (after serial number 11879) ..... 6 - 102

Ground Control Box Switch Panel Wiring Diagram,
S-65, Perkins 404-22 Models (after serial number 11879) ..... 6 - 103

Platform Control Box Terminal Strip Wiring Diagram,
S-65, Perkins 404-22 Models ..... 6 - 104

Platform Control Box Switch Panel Wiring Diagram,
S-65, Perkins 404-22 Models ..... 6 - 105

Belt Driven Generator Wiring Diagram ..... 6 - 106

12kW Hydraulic Generator Option Wiring Diagram ..... 6 - 107

Hydraulic Schematic, 12kW Hydraulic Generator Option ..... 6 - 108

Hydraulic Schematic, 2WD Models ..... 6 - 109

Hydraulic Schematic, 4WD Models ..... 6 - 110

Specifications

Machine Specifications

Tires and wheels	
Tire size (Rough terrain, low profile)	355/55D625
Tire size (Rough terrain, tall)	385-19.5
Tire size (Hi-flotation)	41/18LL x 22.5
Tire ply rating (Rough terrain, low profile and Hi-flotation)	14
Tire ply rating (Rough terrain, tall)	16
Wheel lugs	9 @ 5/8 -18
Lug nut torque, dry	240 ft-lbs 325 Nm
Lug nut torque, lubricated	180 ft-lbs 244 Nm
Overall tire diameter (Rough terrain, low profile tires)	36.9 in 93.7 cm
Overall tire diameter (Rough terrain, tall tires)	40.1 in 102 cm
Overall tire diameter (Hi-flotation tires)	40.3 in 102.4 cm
Tire pressure (Rough terrain, low profile tires)	70 psi 4.92 bar
Tire pressure (Rough terrain, tall tires)	85 psi 5.9 bar
Tire pressure (Hi-flotation tires)	60 psi 4.13 bar

Fluid capacities	
Fuel tank	35 gallons 151 liters
LPG tank	33.5 pounds 15.2 kg
Hydraulic tank	45 gallons 170 liters
Hydraulic system (including tank)	55 gallons 208 liters
Drive hubs	20 fl oz 0.6 liters
Turntable rotation drive hub	40 fl oz 1.19 liters

Drive hub oil type:
SAE 90 multipurpose hypoid gear oil API service classification GL5

For operational specifications, refer to the Operator's Manual.

Continuous improvement of our products is a Genie policy. Product specifications are subject to change without notice.

SPECIFICATIONS

Performance Specifications

Boom function speeds, maximum from platform controls	
Jib boom up, S-65	60 to 70 seconds
Jib boom down, S-65	40 to 50 seconds
Boom up	60 to 70 seconds
Boom down	60 to 70 seconds
Boom extend	58 to 66 seconds
Boom retract	53 to 62 seconds
Turntable rotate, 360° boom stowed	78 to 86 seconds
Turntable rotate, 360° boom raised or extended	125 to 165 seconds
Platform rotate, 160°	8 to 12 seconds
Braking distance, maximum	
High range on paved surface	3 to 6 ft 0.9 to 1.8 m
Drive speed, maximum stowed position	
2WD models	40 ft / 6.2 sec 12.2 m / 6.2 sec
4WD models	40 ft / 7.6 sec 12.2 m / 7.6 sec
Drive speed, maximum raised or extended position	
All models	40 ft / 40 sec 12.2 m / 40 sec
Gradeability	See Operator's Manual

Continuous improvement of our products is a Genie policy. Product specifications are subject to change without notice.

SPECIFICATIONS

Hydraulic Specifications

Hydraulic Oil Specifications	
Hydraulic oil type	Chevron Rando HD MV equivalent
Viscosity grade	Multi-viscosity
Viscosity index	200
Cleanliness level, minimum	15/13
Water content, maximum	200 ppm

Chevron Rando HD MV oil is fully compatible and mixable with Shell Donax TG (Dexron III) oils.
Genie specifications require hydraulic oils which are designed to give maximum protection to hydraulic systems, have the ability to perform over a wide temperature range, and the viscosity index should exeed 140. They should provide excellent antiwear, oxidation, corrosion inhibition, seal conditioning, and foam and aeration suppression properties.

Optional fluids	
Biodegradable	Petro Canada Environ MV46 Statoil Hydra Way Bio Pa 32 BP Biohyd SE-S
Fire resistant	UCON Hydrolube HP-5046 Quintolubric 822
Mineral based	Shell Tellus T32 Shell Tellus T46 Chevron Aviation A

NOTICE Continued use of Chevron Aviation A hydraulic oil when in ambient temperatures consistently below 0°F / -18°C may result in component damage.

Note: Use Chevron Aviation A hydraulic oil when in ambient temperatures consistently below 0°F / -18°C.

Note: Use Shell Tellus T46 hydraulic oil when oil temperatures consistently exceed 205°F / 96°C.

Note: Genie specifications require additional equipment and special installation instructions for the approved optional fluids. Consult the Genie Service Department before use.

Drive pump	
Type:	bi-directional, variable displacement piston pump
Flow rate @ 2500 rpm	32.4 gpm 122.6 L/min
Drive pressure, maximum	3750 psi 259 bar

Charge pump	
Type:	gerotor
Displacement	0.85 cu in 13.9 cc
Flow rate @ 2500 rpm	9.2 gpm 34.8 L/min
Charge pressure @ 2500 rpm	310 psi 21.4 bar

Function pump	
Type:	2 section tandem gear pump
Displacement - Pump 1 (inner)	1.4 cu in 23 cc
Flow rate @ 2500 rpm	15.3 gpm 58 L/min
Displacement - Pump 2 (outer) (oscillate models)	0.24 cu in 4 cc
Flow rate @ 2500 rpm	2 gpm 7.6 L/min

Auxiliary pump	
Type:	gear, fixed displacement
Displacement	1.75 gpm 2.8 L/min

Continuous improvement of our products is a Genie policy. Product specifications are subject to change without notice.

SPECIFICATIONS

Function manifold	
System relief valve pressure	3000 psi 207 bar
Steer flow regulator	3.5 gpm 13.2 L/min
Jib boom / platform rotate flow regulator	0.6 gpm 2.27 L/min
Oscillate relief valve pressure (@ 2500 rpm)	800 psi 55 bar
Drive manifold	
Hot oil relief valve pressure	280 psi 19.3 bar
Drive motors, 4WD models	
Displacement per revolution, high speed	0.79 cu in 13 cc
Displacement per revolution, low speed	1.83 cu in 30 cc
Drive motors, 2WD models	
Displacement per revolution, high speed	1.28 cu in 20.9 cc
Displacement per revolution, low speed	2.14 cu in 35 cc
Hydraulic filters	
High pressure filter	Beta 3 ≥ 200
High pressure filter bypass pressure	51 psi 3.5 bar
Medium pressure filter	Beta 3 ≥ 200
Medium pressure filter bypass pressure	51 psi 3.5 bar
Hydraulic return filter	10 micron with 25 psi / 1.7 bar bypass

Manifold Component Specifications

Plug torque	
SAE No. 2	36 in-lbs / 4 Nm
SAE No. 4	10 ft-lbs / 13 Nm
SAE No. 6	14 ft-lbs / 19 Nm
SAE No. 8	38 ft-lbs / 51 Nm
SAE No. 10	41 ft-lbs / 55 Nm
SAE No. 12	56 ft-lbs / 76 Nm

Valve coil resistance specifications	
Solenoid valve, 3 position 4 way, 10V DC (schematic items D, V and Y)	5 to 7Ω
Solenoid valve, 3 position 4 way, 10V DC (schematic item BB)	4 to 6Ω
Solenoid valve, 2 position 3 way, 10V DC (schematic items B, C, E, F and FF)	5 to 7Ω
Solenoid valve, 2 position 3 way, 10V DC (schematic items KK and LL)	5.5 to 7.5Ω
Proportional solenoid valve, 12V DC (schematic items M and T)	4 to 6Ω
Proportional solenoid valve, 12V DC (schematic item Q)	3.7 to 5.7Ω

Continuous improvement of our products is a Genie policy. Product specifications are subject to change without notice.

SPECIFICATIONS

GM 3.0L EFI Engine

Displacement	181 cu in 3 liters
Number of cylinders	4
Bore & stroke	4 x 3.6 inches 101.6 x 91.44 mm
Horsepower Intermittent	67 @ 2300 rpm 50 kW @ 2300 rpm
Continuous	60 @ 2300 rpm 45 kW @ 2300 rpm
Firing order	1 - 3 - 4 - 2
Low idle	1650 rpm 386 Hz
High idle	2500 rpm 585 Hz
Compression ratio	9.25:1
Compression pressure - minimum Pressure (psi or bar) of lowest cylinder must be at least 75% of highest cylinder	100 psi 6.9 bar
Valve clearances	Zero lash + 1 full turn
Lubrication system	
Oil pressure, minimum (operating temp. @ 2000 rpm)	18 psi 1.24 bar
Oil capacity (including filter)	5 quarts 4.7 liters
Oil viscosity requirements	
Below 0° F / -17.8° C	5W-30
Above 0° F / -17.8° C	10W-30

Extreme operating temperatures may require the use of alternative engine oils. For oil requirements, refer to the Engine Operator Handbook on your machine.

Starter motor	
Normal engine cranking speed	350 rpm
Current draw, normal load	400A
Current draw, maximum load	600A
Current draw, minimum	100A
Battery	
Type	12V DC
Group	31
Quantity	1
Cold cranking ampere @ 0°F	1000A
Reserve capacity @ 25A rate	200 minutes
Electronic fuel pump	
Fuel pressure, static	9 to 11 psi 0.6 to 0.76 bar
Fuel flow rate	0.3 gpm 1.14 L/min
Fuel requirement	

For fuel requirements, refer to the engine Operator's Manual on your machine.

Ignition system	
Spark plug type	AC ACMR-43-LTS
Spark plug gap	0.040 inches 1.01 mm
Engine coolant	
Capacity	12 quarts 11.4 liters
Alternator output	66A @ 12V DC
Fan belt deflection	1/2 inch 12 mm

Continuous improvement of our products is a Genie policy. Product specifications are subject to change without notice.

SPECIFICATIONS

Ford LRG-425 EFI Engine

Displacement	153 cu in 2.5 liters
Number of cylinders	4
Bore & stroke	3.78 x 3.4 inches 96.01 x 86.36 mm
Horsepower	70 @ 2500 rpm 52 kW @ 2500 rpm
Firing order	1 - 3 - 4 - 2
Low function idle (computer controlled)	1600 rpm 395 Hz
High function idle (computer controlled)	2500 rpm 620 Hz
Compression ratio	9.4:1
Compression pressure (approx.) Pressure (psi or bar) of lowest cylinder must be at least 75% of highest cylinder	
Valve clearances - collapsed tappet	0.035 to 0.055 inches 0.889 to 1.397 mm
Lubrication system	
Oil pressure (operating temperature @ 2500 rpm)	40 to 60 psi 2.75 to 4.1 bar
Oil capacity (including filter)	4.5 quarts 4.3 liters
Oil pressure switch	
Oil pressure switch point	7.5 psi 0.51 bar
Oil viscosity requirements	
Extreme operating temperatures may require the use of alternative engine oils. For oil requirements, refer to the Engine Operator Handbook on your machine.	

Electronic fuel pump	
Fuel pressure, static	63 psi 4.3 bar
Fuel flow rate	0.58 gpm 2.2 L/min
Fuel requirement	
For fuel requirements, refer to the engine Operator's Manual on your machine.	
Ignition system	
Spark plug type	Motorcraft AGSF-32-FM
Spark plug gap	0.042 to 0.046 inches 1.07 to 1.17 mm
Engine coolant	
Capacity	11.5 quarts 10.9 liters
Coolant temperature switch	
Temperature switch point	230°F 110°C
Starter motor	
Normal engine cranking speed	200 to 250 rpm
Current draw, normal load	140-200A
Current draw, maximum load	800A
Alternator	
Output	95A, 14.5V DC
Battery	
Type	12V DC, Group 31
Quantity	1
Cold cranking ampere @ 0°F	1000A
Reserve capacity @ 25A rate	200 minutes

Continuous improvement of our products is a Genie policy. Product specifications are subject to change without notice.

SPECIFICATIONS

Ford DSG-423 EFI Engine

Displacement	140.4 cu in 2.3 liters
Number of cylinders	4
Bore & stroke	3.44 x 3.7 inches 87.5 x 94 mm
Horsepower	59 @ 2500 rpm 44 kW @ 2500 rpm
Firing order	1 - 3 - 4 - 2
Low function idle (computer controlled)	1600 rpm 53 Hz
High function idle (computer controlled)	2500 rpm 83 Hz
Compression ratio	9.7:1

Compression pressure (approx.)
Pressure (psi or bar) of lowest cylinder must be at least 75% of highest cylinder

Lubrication system	
Oil pressure (at operating temperature @ 2500 rpm)	29 to 39 psi 2 to 2.7 bar
Oil capacity (including filter)	4 quarts 3.8 liters

Oil pressure switch	
Oil pressure switch point	7.5 psi 0.51 bar

Oil viscosity requirements

Extreme operating temperatures may require the use of alternative engine oils. For oil requirements, refer to the Engine Operator Handbook on your machine.

Electronic fuel pump	
Fuel pressure, static	64 psi 4.4 bar
Fuel flow rate	0.43 gpm 1.6 L/min

Fuel requirement

For fuel requirements, refer to the engine Operator's Manual on your machine.

Ignition system	
Spark plug type	Motorcraft AGSF-32-FEC
Spark plug gap	0.049 to 0.053 inches 1.244 to 1.346 mm

Engine coolant	
Capacity	10 quarts 9.5 liters

Cylinder head temperature sending unit	
Fault code set temperature	280°F 138°C
Engine shut-down temperature	300°F 149°C

Starter motor	
Normal engine cranking speed	200 to 250 rpm
Current draw, normal load	140-200A
Current draw, maximum load	800A

Alternator	
Output	95A, 13.8V DC

Battery	
Type	12V DC, Group 31
Quantity	1
Cold cranking ampere @ 0°F	1000A
Reserve capacity @ 25A rate	200 minutes

Continuous improvement of our products is a Genie policy. Product specifications are subject to change without notice.

SPECIFICATIONS

Deutz F3L 2011 Engine

Displacement	142 cu in 2.33 liters
Number of cylinders	3
Bore and stroke	3.7 x 4.4 inches 94 x 112 mm
Horsepower	48 @ 2800 rpm 36 kW @ 2800 rpm
Firing order	1 - 2 - 3
Low idle	1500 rpm 313 Hz
High idle	2500 rpm 522 Hz
Compression ratio	19:1
Compression pressure	362 to 435 psi 25 to 30 bar
Governor	centrifugal mechanical
Valve clearance, cold	
Intake	0.012 in 0.3 mm
Exhaust	0.020 in 0.5 mm
Lubrication system	
Oil pressure	20 to 44 psi 1.4 to 3 bar
Oil capacity (including filter)	8.5 quarts 8 liters

Oil viscosity requirements	
-22° F to 86° F/ -30° C to 30° C	5W-30 (synthetic)
-4° F to 90° F / -20° C to 32° C	10W-40
Above 23° F / -5° C	20W-50

Units ship with 15W-40.
Extreme operating temperatures may require the use of alternative engine oils. For oil requirements, refer to the Engine Operator Handbook on your machine.

Oil temperature switch	
Temperature switch point	300°F 149°C
Oil pressure switch	
Oil pressure switch point	7 psi 0.48 bar
Fuel injection system	
Injection pump make	Bosch
Injection pump pressure, maximum	15000 psi 1034 bar
Injector opening pressure	3046 psi 210 bar

Fuel requirement

For fuel requirements, refer to the engine Operator's Manual on your machine.

Starter motor	
Current draw, no load	90A
Brush length, new	0.72 in 18.5 mm
Brush length, minimum	0.27 in 7 mm

Continuous improvement of our products is a Genie policy. Product specifications are subject to change without notice.

SPECIFICATIONS

Battery	
Type	12V DC
Size	13 x $6^{13}/_{16}$ x $9^{3}/_{8}$ inches 33 x 17.3 x 23.8 cm
Quantity	1
Cold cranking ampere	1000A
Reserve capacity @ 25A rate	200 minutes
Alternator output	60A @ 14V DC
Fan belt deflection	$^{3}/_{8}$ to $^{1}/_{2}$ inch 9 to 12 mm

SPECIFICATIONS

Perkins 404-22 Engine

Displacement	134 cu in 2.2 liters
Number of cylinders	4
Bore and stroke	3.31 x 3.94 inches 84 x 100 mm
Horsepower	51 @ 2500 rpm 38 kW @ 2500 rpm
Firing order	1 - 3 - 4 - 2
Low idle	1300 rpm 201 Hz
High idle	2500 rpm 231 Hz
Compression ratio	23.3:1
Compression pressure	426 psi 29.4 bar

Pressure (psi) of lowest cylinder must be within 50 psi / 3.45 bar of highest cylinder

Governor	centrifugal mechanical
Valve clearance, cold	
Intake	0.008 in 0.2 mm
Exhaust	0.008 in 0.2 mm

Lubrication system	
Oil pressure, cold (at 2500 rpm)	60 psi 4.1 bar
Oil capacity (including filter)	9.3 quarts 8.8 liters
Oil viscosity requirements	
Below 86°F / 30°C	5W-20
-4°F to 104°F / -20°C to 40°C	10W-30
Above 14°F / -10°C	15W-40

Units ship with 15W-40.
Extreme operating temperatures may require the use of alternative engine oils. For oil requirements, refer to the Engine Operator Handbook on your machine.

Oil pressure sending unit	
Oil pressure switch point	14.2 psi 1 bar
Fuel injection system	
Injection pump make	Zexel
Injection pressure	2133 psi 147 bar

Fuel requirement

For fuel requirements, refer to the engine Operator's Manual on your machine.

Alternator output	55A @ 12V DC
Fan belt deflection	3/8 in 10 mm
Starter motor	
Current draw, no load	90A
Brush length, new	0.7480 in 19 mm
Brush length, minimum	0.5 in 12.7 mm

Continuous improvement of our products is a Genie policy. Product specifications are subject to change without notice.

SPECIFICATIONS

Battery	
Type	12V DC
Size	13 x 6 13/16 x 9 3/8 inches 33 x 17.3 x 23.8 cm
Quantity	1
Cold cranking ampere	1000A
Reserve capacity @ 25A rate	200 minutes
Engine coolant	
Capacity	7.7 quarts 7.3 liters
Coolant temperature sending unit	
Temperature switch point	221° F 105° C

Machine Torque Specifications

Platform rotator	
1-8 center bolt, GR 8	480 ft-lbs 651 Nm
3/8 -16 bolts, GR 8	44 ft-lbs 60 Nm
Drive motor and hubs	
Drive hub mounting bolts, lubricated	160 ft-lbs 217 Nm
Drive motor mounting bolts, lubricated	55 ft-lbs 75 Nm
Turntable bearing	
Rotate bearing mounting bolts, lubricated	180 ft-lbs 244 Nm
Turntable rotation assembly	
Backlash pivot plate, lubricated	320 ft-lbs 433 Nm

Continuous improvement of our products is a Genie policy. Product specifications are subject to change without notice.

SPECIFICATIONS

Hydraulic Hose and Fitting Torque Specifications

Your machine is equipped with Parker Seal-Lok® fittings and hose ends. Genie specifications require that fittings and hose ends be torqued to specification when they are removed and installed or when new hoses or fittings are installed.

SAE O-ring Boss Port
(tube fitting - installed into Aluminum)

SAE Dash size	Torque
-4	11 ft-lbs / 14.9 Nm
-6	23 ft-lbs / 31.2 Nm
-8	40 ft-lbs / 54.2 Nm
-10	69 ft-lbs / 93.6 Nm
-12	93 ft-lbs / 126.1 Nm
-16	139 ft-lbs / 188.5 Nm
-20	172 ft-lbs / 233.2 Nm
-24	208 ft-lbs / 282 Nm

Seal-Lok® fittings

1 Replace the O-ring. The O-ring must be replaced anytime the seal has been broken. The O-ring cannot be re-used if the fitting or hose end has been tightened beyond finger tight.

NOTICE The O-rings used in the Parker Seal Lok® fittings and hose ends are custom-size O-rings. They are not standard SAE size O-rings. They are available in the O-ring field service kit (Genie part number 49612).

2 Lubricate the O-ring before installation.

3 Be sure that the face seal O-ring is seated and retained properly.

4 Position the tube and nut squarely on the face seal end of the fitting and tighten the nut finger tight.

5 Tighten the nut or fitting to the appropriate torque per given size as shown in the table.

6 Operate all machine functions and inspect the hoses and fittings and related components to confirm that there are no leaks.

SAE O-ring Boss Port
(tube fitting - installed into Steel)

SAE Dash size	Torque
-4	16 ft-lbs / 21.7 Nm
-6	35 ft-lbs / 47.5 Nm
-8	60 ft-lbs / 81.3 Nm
-10	105 ft-lbs / 142.4 Nm
-12	140 ft-lbs / 190 Nm
-16	210 ft-lbs / 284.7 Nm
-20	260 ft-lbs / 352.5 Nm
-24	315 ft-lbs / 427.1 Nm

Seal-Lok® Fittings
(hose end)

SAE Dash size	Torque
-4	18 ft-lbs / 25 Nm
-6	30 ft-lbs / 40 Nm
-8	40 ft-lbs / 55 Nm
-10	60 ft-lbs / 80 Nm
-12	85 ft-lbs / 115 Nm
-16	110 ft-lbs / 150 Nm
-20	140 ft-lbs / 190 Nm
-24	180 ft-lbs / 245 Nm

SPECIFICATIONS

SAE FASTENER TORQUE CHART

• This chart is to be used as a guide only unless noted elsewhere in this manual •

SIZE	THREAD	Grade 5				Grade 8				A574 High Strength Black Oxide Bolts	
		LUBED		DRY		LUBED		DRY		LUBED	
		in-lbs	Nm	in-lbs	Nm	in-lbs	Nm	in-lbs	Nm	in-lbs	Nm
1/4	20	80	9	100	11.3	110	12.4	140	15.8	130	14.7
	28	90	10.1	120	13.5	120	13.5	160	18	140	15.8
		LUBED		DRY		LUBED		DRY		LUBED	
		ft-lbs	Nm	ft-lbs	Nm	ft-lbs	Nm	ft-lbs	Nm	ft-lbs	Nm
5/16	18	13	17.6	17	23	18	24	25	33.9	21	28.4
	24	14	19	19	25.7	20	27.1	27	36.6	24	32.5
3/8	16	23	31.2	31	42	33	44.7	44	59.6	38	51.5
	24	26	35.2	35	47.4	37	50.1	49	66.4	43	58.3
7/16	14	37	50.1	49	66.4	50	67.8	70	94.7	61	82.7
	20	41	55.5	55	74.5	60	81.3	80	108.4	68	92.1
1/2	13	57	77.3	75	101.6	80	108.4	110	149	93	126
	20	64	86.7	85	115	90	122	120	162	105	142
9/16	12	80	108.4	110	149	120	162	150	203	130	176
	18	90	122	120	162	130	176	170	230	140	189
5/8	11	110	149	150	203	160	217	210	284	180	244
	18	130	176	170	230	180	244	240	325	200	271
3/4	10	200	271	270	366	280	379	380	515	320	433
	16	220	298	300	406	310	420	420	569	350	474
7/8	9	320	433	430	583	450	610	610	827	510	691
	14	350	474	470	637	500	678	670	908	560	759
1	8	480	650	640	867	680	922	910	1233	770	1044
	12	530	718	710	962	750	1016	990	1342	840	1139
1 1/8	7	590	800	790	1071	970	1315	1290	1749	1090	1477
	12	670	908	890	1206	1080	1464	1440	1952	1220	1654
1 1/4	7	840	1138	1120	1518	1360	1844	1820	2467	1530	2074
	12	930	1260	1240	1681	1510	2047	2010	2725	1700	2304
1 1/2	6	1460	1979	1950	2643	2370	3213	3160	4284	2670	3620
	12	1640	2223	2190	2969	2670	3620	3560	4826	3000	4067

METRIC FASTENER TORQUE CHART

• This chart is to be used as a guide only unless noted elsewhere in this manual •

Size (mm)	Class 4.6				Class 8.8				Class 10.9				Class 12.9			
	LUBED		DRY		LUBED		DRY		LUBED		DRY		LUBED		DRY	
	in-lbs	Nm	in-lbs	Nm	in-lbs	Nm	in-lbs	Nm	in-lbs	Nm	in-lbs	Nm	in-lbs	Nm	in-lbs	Nm
5	16	1.8	21	2.4	41	4.63	54	6.18	58	6.63	78	8.84	68	7.75	91	10.3
6	19	3.05	36	4.07	69	7.87	93	10.5	100	11.3	132	15	116	13.2	155	17.6
7	45	5.12	60	6.83	116	13.2	155	17.6	167	18.9	223	25.2	1.95	22.1	260	29.4
	LUBED		DRY		LUBED		DRY		LUBED		DRY		LUBED		DRY	
	ft-lbs	Nm	ft-lbs	Nm	ft-lbs	Nm	ft-lbs	Nm	ft-lbs	Nm	ft-lbs	Nm	ft-lbs	Nm	ft-lbs	Nm
8	5.4	7.41	7.2	9.88	14	19.1	18.8	25.5	20.1	27.3	26.9	36.5	23.6	32	31.4	42.6
10	10.8	14.7	14.4	19.6	27.9	37.8	37.2	50.5	39.9	54.1	53.2	72.2	46.7	63.3	62.3	84.4
12	18.9	25.6	25.1	34.1	48.6	66	64.9	88	69.7	94.5	92.2	125	81	110	108	147
14	30.1	40.8	40	54.3	77.4	105	103	140	110	150	147	200	129	175	172	234
16	46.9	63.6	62.5	84.8	125	170	166	226	173	235	230	313	202	274	269	365
18	64.5	87.5	86.2	117	171	233	229	311	238	323	317	430	278	377	371	503
20	91	124	121	165	243	330	325	441	337	458	450	610	394	535	525	713
22	124	169	166	225	331	450	442	600	458	622	612	830	536	727	715	970
24	157	214	210	285	420	570	562	762	583	791	778	1055	682	925	909	1233

This page intentionally left blank.

Scheduled Maintenance Procedures

Observe and Obey:

- ☑ Maintenance inspections shall be completed by a person trained and qualified on the maintenance of this machine.
- ☑ Scheduled maintenance inspections shall be completed daily, quarterly, semi-annually, annually and every 2 years as specified on the *Maintenance Inspection Report.* The frequency and extent of periodic examinations and tests may also depend on national regulations.

⚠WARNING Failure to perform each procedure as presented and scheduled may cause death, serious injury or substantial damage.

- ☑ Immediately tag and remove from service a damaged or malfunctioning machine.
- ☑ Repair any machine damage or malfunction before operating machine.
- ☑ Use only Genie approved replacement parts.
- ☑ Unless otherwise specified, perform each maintenance procedure with the machine in the following configuration:
  - Machine parked on a firm, level surface
  - Boom in stowed position
  - Turntable rotated with the boom between the non-steer wheels
  - Turntable secured with the turntable rotation lock
  - Key switch in the off position with the key removed
  - Wheels chocked
  - All external AC power disconnected from the machine

About This Section

This section contains detailed procedures for each scheduled maintenance inspection.

Each procedure includes a description, safety information and step-by-step instructions.

Symbols Legend

Safety alert symbol—used to alert personnel to potential personal injury hazards. Obey all safety messages that follow this symbol to avoid possible injury or death.

⚠DANGER Indicate, an imminently hazardous situation which, if not avoided, will result in death or serious injury.

⚠WARNING Indicates a potentially hazardous situation which, if not avoided, could result in death or serious injury.

⚠CAUTION Indicates a potentially hazardous situation which, if not avoided, may cause minor or moderate injury.

NOTICE Indicates a potentially hazardous situation which, if not avoided, may result in property damage.

⊙ Indicates that a specific result is expected after performing a series of steps.

⊠ Indicates that an incorrect result has occurred after performing a series of steps.

SCHEDULED MAINTENANCE PROCEDURES

Maintenance Symbols Legend

NOTICE The following symbols have been used in this manual to help communicate the intent of the instructions. When one or more of the symbols appear at the beginning of a maintenance procedure, it conveys the meaning below.

Indicates that tools will be required to perform this procedure.

Indicates that new parts will be required to perform this procedure.

Indicates that a cold engine will be required to perform this procedure.

Indicates that a warm engine will be required to perform this procedure.

Indicates that dealer service is required to perform this procedure.

Pre-delivery Preparation Report

The pre-delivery preparation report contains checklists for each type of scheduled inspection.

Make copies of the *Pre-delivery Preparation Report* to use for each inspection. Store completed forms as required.

Maintenance Schedule

There are five types of maintenance inspections that must be performed according to a schedule—daily, quarterly, semi-annually, annual and two years. The *Scheduled Maintenance Procedures Section and the Maintenance Inspection Report* have been divided into five subsections—A, B, C, D and E. Use the following chart to determine which group(s) of procedures are required to perform a scheduled inspection.

Inspection	Checklist
Daily or every 8 hours	A
Quarterly or every 250 hours	A + B
Semi-annually or every 500 hours	A + B + C
Annual or every 1000 hours	A + B + C + D
Two years or every 2000 hours	A + B + C + D + E

Maintenance Inspection Report

The maintenance inspection report contains checklists for each type of scheduled inspection.

Make copies of the *Maintenance Inspection Report* to use for each inspection. Maintain completed forms for a minimum of 4 years or in compliance with employer, jobsite and governmental regulations and requirements.

Pre-Delivery Preparation

Fundamentals

It is the responsibility of the dealer to perform the Pre-delivery Preparation.

The Pre-delivery Preparation is performed prior to each delivery. The inspection is designed to discover if anything is apparently wrong with a machine before it is put into service.

A damaged or modified machine must never be used. If damage or any variation from factory delivered condition is discovered, the machine must be tagged and removed from service.

Repairs to the machine may only be made by a qualified service technician, according to the manufacturer's specifications.

Scheduled maintenance inspections shall be performed by qualified service technicians, according to the manufacturer's specifications and the requirements listed in the responsibilities manual.

Instructions

Make copies of this form to use for each Pre-Delivery Preparation.

Use the operator's manual on your machine.

The Pre-delivery Preparation consists of completing the Pre-operation Inspection, the Maintenance items and the Function Tests.

Use this form to record the results. Place a check in the appropriate box after each part is completed. Follow the instructions in the operator's manual.

If any inspection receives an N, remove the machine from service, repair and re-inspect it. After repair, place a check in the R box.

Legend

Y = yes, completed
N = no, unable to complete
R = repaired

Comments

Pre-Delivery Preparation	Y	N	R
Pre-operation inspection completed			
Maintenance items completed			
Function tests completed			

Model

Serial number

Date

Machine owner

Inspected by (print)

Inspector signature

Inspector title

Inspector company

A TEREX BRAND

Terex South Dakota, Inc USA
500 Oak Wood Road
PO Box 1150
Watertown, SD 57201-6150
(605) 882-4000

Genie UK
The Maltings, Wharf Road
Grantham, Lincolnshire
NG31- 6BH England
(44) 1476-584333

Copyright © 2011 Terex Corporation. Genie® is a registered trademark of Terex South Dakota, Inc. 133192 Rev D

This page intentionally left blank.

Maintenance Inspection Report

Model

Serial number

Date

Hour meter

Machine owner

Inspected by (print)

Inspector signature

Inspector title

Inspector company

Instructions

- Make copies of this report to use for each inspection.
- Select the appropriate checklist(s) for the type of inspection to be performed.

☐	**Daily or 8 hour Inspection:**	**A**
☐	**Quarterly or 250 hour Inspection:**	**A+B**
☐	**Semi-annual or 500 hour Inspection:**	**A+B+C**
☐	**Annual or 1000 hours Inspection:**	**A+B+C+D**
☐	**2 Year or 2000 hour Inspection:**	**A+B+C+D+E**

- Place a check in the appropriate box after each inspection procedure is completed.
- Use the step-by-step procedures in this section to learn how to perform these inspections.
- If any inspection receives an “N”, tag and remove the machine from service, repair and re-inspect it. After repair, place a check in the “R” box.

Legend

Y = yes, acceptable

N = no, remove from service

R = repaired

Checklist A		**Y**	**N**	**R**
A-1	Manuals and decals			
A-2	Pre-operation inspection			
A-3	Functions tests			
A-4	Engine maintenance			
A-5	Filter condition indicator			
A-6	Oscillate axle			
Perform after 40 hours:				
A-7	30 day service			
Perform every 100 hours:				
A-8	Inspect air filter - GM models			
A-9	Engine maintenance - GM, Ford and Perkins models			
A-10	Fuel filter/separator - Diesel models			
A-11	Check engine RPM- Perkins models			
A-12	Rotation bearing			
Perform after 150 hours:				
A-13	Drive hub oil			
Perform every 200 hours:				
A-14	Engine maintenance - GM and Ford models			
A-15	Engine maintenance - Perkins models			

Checklist B		**Y**	**N**	**R**
B-1	Inspect battery			
B-2	Inspect electrical wiring			
B-3	Exhaust system			
B-4	Inspect air filter - Ford, Deutz and Perkins models			
B-5	Oil cooler and fins- Deutz models			
B-6	Tires and wheels			
B-7	Brake configuration			
B-8	Hub oil and Torque			
B-9	Engine RPM - Ford and Deutz models			
B-10	Ground control override			
B-11	Directional valve			
B-12	Platform leveling			
B-13	Engine idle select			
B-14	Fuel select - GM and Ford models			
B-15	Drive brakes			
B-16	Drive speed - stowed position			
B-17	Drive speed - raised position			
B-18	Alarm package			
B-19	Hydraulic oil analysis			
B-20	Fuel and hydraulic tank cap venting			
B-21	Fuel filter element - Perkins models			
B-22	Boom extend/retract cables			
Perform every 400 hours:				
B-23	Engine maintenance - Deutz models			
B-24	Engine maintenance - GM and Ford models			
B-25	Replace air filter - GM and Ford models			
B-26	Engine maintenance - Perkins models			

Comments

MAINTENANCE INSPECTION REPORT

Model

Serial number

Date

Hour meter

Machine owner

Inspected by (print)

Inspector signature

Inspector title

Inspector company

Instructions

- Make copies of this report to use for each inspection.
- Select the appropriate checklist(s) for the type of inspection to be performed.

☐	**Daily or 8 hour Inspection:**	**A**
☐	**Quarterly or 250 hour Inspection:**	**A+B**
☐	**Semi-annual or 500 hour Inspection:**	**A+B+C**
☐	**Annual or 1000 hours Inspection:**	**A+B+C+D**
☐	**2 Year or 2000 hour Inspection:**	**A+B+C+D+E**

- Place a check in the appropriate box after each inspection procedure is completed.
- Use the step-by-step procedures in this section to learn how to perform these inspections.
- If any inspection receives an “N”, tag and remove the machine from service, repair and re-inspect it. After repair, place a check in the “R” box.

Legend

Y = yes, acceptable

N = no, remove from service

R = repaired

Checklist C		**Y**	**N**	**R**
C-1	Engine maintenance - Deutz models			
C-2	Grease platform overload, S-60 and S-65 (if equipped)			
C-3	Test platform overload, S-60 and S-65 (if equipped)			
C-4	Test load sense, S-60 HC			
C-5	Fuel filter/separator - Perkins models			
C-6	Replace air filter - Deutz and Perkins models			
Perform every 600 hours:				
C-7	Engine maintenance - Perkins models			
Perform every 800 hours:				
C-8	Engine maintenance - GM and Ford models			

Checklist D		**Y**	**N**	**R**
D-1	Boom wear pads			
D-2	Turntable bearing bolts			
D-3	Turntable bearing wear			
D-4	Drive hub oil			
D-5	Free-wheel configuration			
D-6	Hydraulic filters			
D-7	Air/LPG mixture - GM models			
D-8	Engine maintenance - Deutz models			

Checklist E		**Y**	**N**	**R**
E-1	Hydraulic oil			
Perform every 3000 hours:				
E-2	Engine maintenance - Deutz models			
Perform every 12,000 hours:				
E-3	Engine maintenance - Deutz models			
Perform every 10 years:				
E-4	Replace the Boom Extend/Retract cables			

Comments

Checklist A Procedures

A-1
Inspect the Manuals and Decals

Note: Genie specifications require that this procedure be performed daily or every 8 hours, whichever comes first.

Maintaining the operator's and safety manuals in good condition is essential to safe machine operation. Manuals are included with each machine and should be stored in the container provided in the platform. An illegible or missing manual will not provide safety and operational information necessary for a safe operating condition.

In addition, maintaining all of the safety and instructional decals in good condition is mandatory for safe machine operation. Decals alert operators and personnel to the many possible hazards associated with using this machine. They also provide users with operation and maintenance information. An illegible decal will fail to alert personnel of a procedure or hazard and could result in unsafe operating conditions.

1 Check to make sure that the operator's and safety manuals are present and complete in the storage container on the platform.

2 Examine the pages of each manual to be sure that they are legible and in good condition.

⊙ Result: The operator's manual is appropriate for the machine and all manuals are legible and in good condition.

⊠ Result: The operator's manual is not appropriate for the machine or all manuals are not in good condition or are illegible. Remove the machine from service until the manual is replaced.

3 Open the operator's manual to the decals inspection section. Carefully and thoroughly inspect all decals on the machine for legibility and damage.

⊙ Result: The machine is equipped with all required decals, and all decals are legible and in good condition.

⊠ Result: The machine is not equipped with all required decals, or one or more decals are illegible or in poor condition. Remove the machine from service until the decals are replaced.

4 Always return the manuals to the storage container after use.

Note: Contact your authorized Genie distributor or Genie if replacement manuals or decals are needed.

CHECKLIST A PROCEDURES

A-2
Perform Pre-operation Inspection

Completing a Pre-operation Inspection is essential to safe machine operation. The Pre-operation Inspection is a visual inspection performed by the operator prior to each work shift. The inspection is designed to discover if anything is apparently wrong with a machine before the operator performs the function tests. The Pre-operation Inspection also serves to determine if routine maintenance procedures are required.

Complete information to perform this procedure is available in the appropriate operator's manual. Refer to the Operator's Manual on your machine.

A-3
Perform Function Tests

Completing the function tests is essential to safe machine operation. Function tests are designed to discover any malfunctions before the machine is put into service. A malfunctioning machine must never be used. If malfunctions are discovered, the machine must be tagged and removed from service.

Complete information to perform this procedure is available in the appropriate operator's manual. Refer to the Operator's Manual on your machine.

CHECKLIST A PROCEDURES

A-4
Perform Engine Maintenance

Note: Engine specifications require that this procedure be performed daily or every 8 hours, whichever comes first.

Proper engine maintenance, following the engine manufacturer's maintenance schedule, is essential to good engine performance and service life. Failure to perform the maintenance procedures can lead to poor engine performance and component damage.

Required maintenance procedures and additional engine information are available in the *Deutz FL 2011 Operation Manual* (Deutz part number 0297-9929) OR the *GM 3.0L Operator Handbook* (GM part number 36100007) OR the *Ford LRG-425 EFI Operator Handbook* (Ford part number FPP 194-302) OR the *Ford DSG-423 EFI Operator Handbook* (EDI part number 1060020) OR the *Perkins 400 Series Operation Manual* (Perkins part number TPD 1443S).

Deutz FL 2011 Operation Manual	
Genie part number	84794
GM 3.0L Operator Handbook	
Genie part number	101095
Ford LRG 425 EFI Operator Handbook	
Genie part number	84792
Ford DSG 423 EFI Operator Handbook	
Genie part number	119488
Perkins 400 Series Operation Manual	
Genie part number	94890

A-5
Check the High Pressure Hydraulic Filter Condition Indicator

Note: Genie specifications require that this procedure be performed daily or every 8 hours, whichever comes first.

Maintaining the high pressure hydraulic filter in good condition is essential to good system performance and safe machine operation. The filter condition indicator will show when the hydraulic flow is bypassing a clogged filter. If the filter is not frequently checked and replaced, impurities will remain in the hydraulic system and cause component damage.

1 Open the engine side turntable cover.

2 Start the engine from the ground controls.

3 Change the engine idle to high rpm (rabbit symbol).

4 Visually inspect the filter condition indicator.

Result: The filter condition indicator should be operating with the plunger in the green area.

Result: If the indicator displays the plunger in the red area, this indicates that the hydraulic filter is being bypassed and the filter should be replaced. See D-6, *Replace the Hydraulic Filters.*

CHECKLIST A PROCEDURES

A-6
Test the Oscillate Axle (if equipped)

Note: Genie specifications require that this procedure be performed daily or every 8 hours, whichever comes first.

Proper axle oscillation is essential to safe machine operation. If the axle oscillation system is not operating correctly, the stability of the machine is compromised and it may tip over.

1 Start the engine from the platform controls.

2 Drive the right steer tire up onto a 6 inch / 15 cm block or curb.

⊙ Result: The three remaining tires should stay in firm contact with the ground and the chassis should remain level at all times.

3 Drive the left steer tire up onto a 6 inch / 15 cm block or curb.

⊙ Result: The three remaining tires should stay in firm contact with the ground and the chassis should remain level at all times.

4 Drive both steer tires up onto a 6 inch / 15 cm block or curb.

⊙ Result: The non-steer tires should stay in firm contact with the ground.

Note: If the chassis does not remain level during test, refer to Repair Procedure 7-6, *How to Set Up the Oscillate Directional Valve.*

A-7
Perform 30 Day Service

The 30 day maintenance procedure is a one time sequence of procedures to be performed after the first 30 days or 40 hours of usage, whichever comes first. After this interval, refer to the maintenance tables for continued scheduled maintenance.

1 Perform the following maintenance procedures:

- A-9 Perform Engine Maintenance - GM, Ford and Perkins Models
- A-12 Grease the Turntable Bearing and Rotate Gear
- B-6 Inspect the Tires, Wheels and Lug Nut Torque
- B-8 Check the Drive Hub Oil Level and Fastener Torque
- C-1 Perform Engine Maintenance - Deutz Models
- D-2 Check the Turnable Rotation Bearing Bolts
- D-6 Replace the Hydraulic Filters

CHECKLIST A PROCEDURES

A-8
Inspect the Engine Air Filter - GM Models

Note: Engine specifications require that this procedure be performed weekly or every 40 hours, whichever comes first. Perform this procedure more often if dusty conditions exist.

Maintaining the engine air filter in good condition is essential to good engine performance and service life. Failure to perform this procedure can lead to poor engine performance and component damage.

Note: Perform this procedure with the engine off.

1 Locate the engine air filter assembly.

2 Release the latches from the air cleaner canister end cap. Remove the end cap.

3 Remove the filter element.

4 Clean the inside of the canister and the end cap with a damp cloth.

5 Inspect the air filter element. If needed, blow from the inside out using low pressure dry compressed air, or carefully tap out dust. Replace the filter if needed.

6 Install the filter element.

7 Install the air filter canister end cap and secure the end cap latches.

Note: Be sure the discharge valve is pointing down when the cap is instaled.

A-9
Perform Engine Maintenance - GM, Ford and Perkins Models

Note: Engine specifications require that this procedure be performed every 100 hours. Perform this procedure more often if dusty conditions exist or the machine is subjected to extended low idle operation.

Proper engine maintenance, following the engine manufacturer's maintenance schedule, is essential to good engine performance and service life. Failure to perform the maintenance procedures can lead to poor engine performance and component damage.

Required maintenance procedures and additional engine information are available in the *GM 3.0L Operator Handbook* (GM part number 36100007) OR the *Ford LRG-425 EFI Operator Handbook* (Ford part number FPP 194-302) OR the *Ford DSG-423 EFI Operator Handbook* (EDI part number 1060020) OR the *Perkins 400 Series Operation Manual* (Perkins part number TPD 1443S) .

GM 3.0L Operator Handbook	
Genie part number	101095
Ford LRG 425 EFI Operator Handbook	
Genie part number	84792
Ford DSG 423 EFI Operator Handbook	
Genie part number	119488
Perkins 400 Series Operation Manual	
Genie part number	94890

CHECKLIST A PROCEDURES

A-10
Inspect the Fuel Filter/Water Separator - Diesel Models

Note: Genie specifications require that this procedure be performed every 100 hours or monthly, whichever comes first.

Proper maintenance of the fuel filter/water separator is essential for good engine performance. Failure to perform this procedure can lead to poor engine performance and/or hard starting, and continued use may result in component damge. Extremely dirty conditions may require this procedure be performed more often.

DANGER Explosion and fire hazard. Engine fuels are combustible. Perform this procedure in an open, well-ventilated area away from heaters, sparks, flames and lighted tobacco. Always have an approved fire extinguisher within easy reach.

Note: Perform this procedure with the engine off.

Perkins Models:

1 Put on protective clothing and eye wear.

2 Open the engine side turntable cover and locate the fuel filter/water separator next to the hydraulic return filter on the bulkhead.

3 Inspect the filter bowl for water buildup.

⊙ Result: If water is present in the filter bowl continue with steps 4 through 8.

4 Loosen the vent plug located on the fuel filter/water separator head.

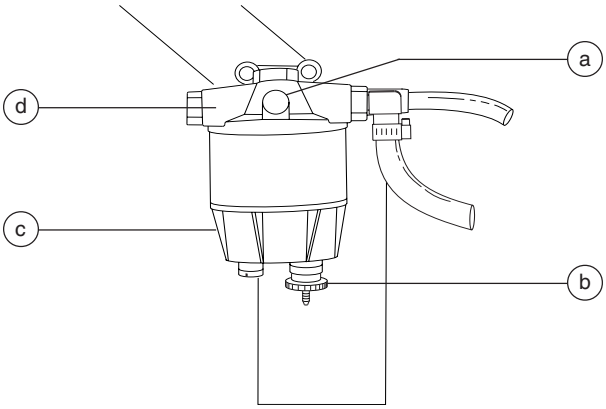

a vent plug
b drain plug
c filter bowl
d separator head

5 Loosen the drain plug located at the bottom of the bowl. Allow the water to drain into a suitable container until fuel starts to come out. Immediately tighten the drain plug.

6 Tighten the vent plug.

Note: If the fuel filter/water separator is completely drained, you must prime the fuel filter/water separator before starting the engine.
See C-6, *Replace The Fuel Filter/Water Separator Element - Perkins Models,* for instructions on how to prime the fuel filter/water separator.

CHECKLIST A PROCEDURES

7 Clean up any fuel that may have spilled.

8 Start the engine from the ground controls and check the fuel filter/water separator and vent plug for leaks.

DANGER Explosion and fire hazard. If a fuel leak is discovered, keep any additional personnel from entering the area and do not operate the machine. Repair the leak immediately.

Deutz Models:

1 Put on protective clothing and eye wear.

2 Remove the engine tray retaining fastener located under the engine tray. Swing the engine tray out and away from the machine.

3 Install the fastener that was just removed through the engine tray and into the engine tray anchor hole in the turntable.

WARNING Crushing hazard. Failure to install the fastener into the engine tray anchor hole to secure the engine tray from moving could result in death or serious injury.

4 Locate the fuel filter/water separator next to the oil filter.

5 Loosen the drain plug located at the bottom of the filter. Allow the water to drain into a suitable container until fuel starts to come out. Immediately tighten the drain plug.

Note: Do not completely drain the filter.

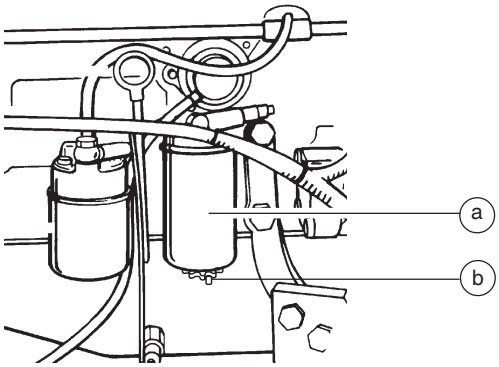

a fuel filter/water separator
b drain valve

6 Clean up any fuel that may have spilled.

7 Start the engine from the ground controls and check the fuel filter/water separator for leaks.

DANGER Explosion and fire hazard. If a fuel leak is discovered, keep any additional personnel from entering the area and do not operate the machine. Repair the leak immediately.

8 Swing the engine back to its original position and install the engine pivot plate retaining fastener.

CHECKLIST A PROCEDURES

A-11
Check and Adjust the Engine RPM - Perkins Models

Note: Engine specifications require that this procedure be performed every 100 hours.

Maintaining the engine rpm at the proper setting for both low and high idle is essential to good engine performance and service life. The machine will not operate properly if the rpm is incorrect and continued use may cause component damage.

Note: This procedure will require two people.

1 Connect a tachometer to the engine. Start the engine from the ground controls and check the rpm. Refer to Section 2, *Specifications*.

Skip to step 3 if the low idle rpm is correct.

2 Loosen the low idle lock nut and turn the low idle adjustment screw clockwise to increase the rpm, or counterclockwise to decrease the rpm. Tighten the low idle lock nut and confirm the rpm.

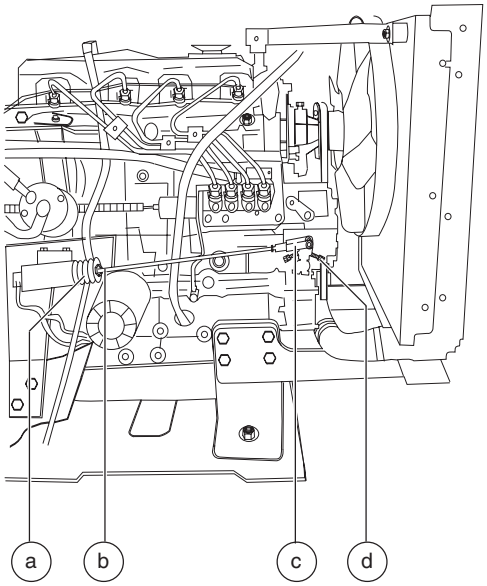

a solenoid boot
b high idle adjustment nut
c yoke
d low idle lock nut and adjustment screw

3 Move the function enable toggle switch to the high idle (rabbit symbol) position and note the rpm. Refer to Section 2, *Specifications*.

If high idle rpm is correct, disregard adjustment step 4.

4 Loosen the yoke lock nut, then turn the high idle adjustment nut and solenoid boot counterclockwise to increase the rpm or clockwise to decrease the rpm. Tighten the yoke lock nut and recheck the rpm.

Note: Be sure the solenoid fully retracts when activating high idle.

A-12
Grease the Turntable Rotation Bearing and Rotate Gear

Note: Genie specifications require that this procedure be performed every 100 hours of operation. Perform this procedure more often if dusty conditions exist.

Frequent application of lubrication to the turntable bearing and rotate gear is essential to good machine performance and service life. Continued use of an improperly greased bearing and gear will result in component damage.

1 Locate the grease fitting on the front turntable cover.

2 Pump grease into the turntable rotation bearing. Rotate the turntable in increments of 4 to 5 inches / 10 to 13 cm at a time and repeat this step until the entire bearing has been greased.

3 Apply grease to each tooth of the drive gear, located under the turntable.

Grease Specification
Chevron Ultra-duty grease, EP NLGI 2 (lithium based) or equivalent

A-13
Replace the Drive Hub Oil

Note: Manufacturer drive hub specifications require that this one-time procedure be performed after the first 150 hours.

Replacing the drive hub oil is essential for good machine performance and service life. Failure to replace the drive hub oil after the first 150 hours of use may cause the machine to perform poorly and continued use may cause component damage.

1 Select the drive hub to be serviced. Drive the machine until one of the two plugs is at the lowest point.

2 Remove both plugs and drain the oil into a suitable container.

3 Drive the machine until one plug is at the top and the other is at 90 degrees.

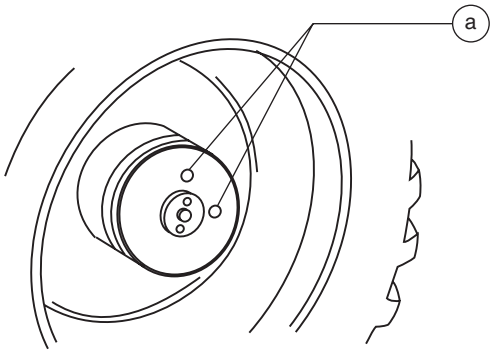

a drive hub plugs

4 Fill the hub with oil from the top hole until the oil level is even with the bottom of the side plug hole. Refer to Section 2, *Specifications.*

5 Install the plugs into the drive hub.

6 Repeat this procedure for the other drive hub.

CHECKLIST A PROCEDURES

A-14
Perform Engine Maintenance - GM and Ford Models

Note: Engine specifications require that this procedure be performed every 200 hours.

Proper engine maintenance, following the engine manufacturer's maintenance schedule, is essential to good engine performance and service life. Failure to perform the maintenance procedures can lead to poor engine performance and component damage.

Required maintenance procedures and additional engine information are available in the *GM 3.0L Operator Handbook* (GM part number 36100007) OR the *Ford LRG-425 EFI Operator Handbook* (Ford part number FPP 194-302) OR the *Ford DSG-423 EFI Operator Handbook* (EDI part number 1060020).

GM 3.0L Operator Handbook Genie part number	101095
Ford LRG 425 EFI Operator Handbook Genie part number	84792
Ford DSG 423 EFI Operator Handbook Genie part number	119488

A-15
Perform Engine Maintenance - Perkins Models

Note: Engine specifications require that this procedure be performed every 200 hours.

Proper engine maintenance, following the engine manufacturer's maintenance schedule, is essential to good engine performance and service life. Failure to perform the maintenance procedures can lead to poor engine performance and component damage.

Required maintenance procedures and additional engine information are available in the *Perkins 400 Series Operation Manual* (Perkins part number TPD 1443S).

Perkins 400 Series Operation Manual Genie part number	94890

To access the engine:

1 Remove the engine tray retaining fastener located under the engine tray. Swing the engine tray out and away from the machine.

2 Install the fastener that was just removed through the engine tray and into the engine tray anchor hole in the turntable.

WARNING Crushing hazard. Failure to install the fastener into the engine tray anchor hole to secure the engine tray from moving could result in death or serious injury.

Checklist B Procedures

B-1
Inspect the Battery

Note: Genie specifications require that this procedure be performed every 250 hours or quarterly, whichever comes first.

Proper battery condition is essential to good engine performance and operational safety. Improper fluid levels or damaged cables and connections can result in engine component damage and hazardous conditions.

WARNING Electrocution/burn hazard. Contact with hot or live circuits could result in death or serious injury. Remove all rings, watches and other jewelry.

WARNING Bodily injury hazard. Batteries contain acid. Avoid spilling or contacting battery acid. Neutralize battery acid spills with baking soda and water.

1 Put on protective clothing and eye wear.

2 Be sure that the battery cable connections are free of corrosion.

Note: Adding terminal protectors and a corrosion preventative sealant will help eliminate corrosion on the battery terminals and cables.

3 Be sure that the battery hold downs and cable connections are tight.

4 Be sure that the battery separator wire connections are tight (if equipped).

5 Fully charge the battery(s) and allow the battery(s) to rest at least 6 hours.

6 Remove the battery vent caps and check the specific gravity of each battery cell with a hydrometer. Note the results.

7 Check the ambient air temperature and adjust the specific gravity reading for each cell as follows:

- Add 0.004 to the reading of each cell for every 10° / 5.5° C above 80° F / 26.7° C.
- Subtract 0.004 from the reading of each cell for every 10° / 5.5° C below 80° F / 26.7° C.

Result: All battery cells display an adjusted specific gravity of 1.277 or higher. The battery is fully charged. Proceed to step 11.

Result: One or more battery cells display a specific gravity of 1.217 or below. Proceed to step 8.

8 Perform an equalizing charge OR fully charge the battery(s) and allow the battery(s) to rest at least 6 hours.

9 Remove the battery vent caps and check the specific gravity of each battery cell with a hydrometer. Note the results.

CHECKLIST B PROCEDURES

10 Check the ambient air temperature and adjust the specific gravity reading for each cell as follows:

- Add 0.004 to the reading of each cell for every 10° / 5.5° C above 80° F / 26.7° C.
- Subtract 0.004 from the reading of each cell for every 10° / 5.5° C below 80° F / 26.7° C.

Result: All battery cells display a specific gravity of 1.277 or greater. The battery is fully charged. Proceed to step 13.

Result: The difference in specific gravity readings between cells is greater than 0.1 OR the specific gravity of one or more cells is less than 1.177. Replace the battery.

11 Check the battery acid level. If needed, replenish with distilled water to 1/8 inch / 3 mm below the bottom of the battery fill tube. Do not overfill.

12 Install the vent caps and neutralize any electrolyte that may have spilled.

B-2
Inspect the Electrical Wiring

Note: Genie specifications require that this procedure be performed every 250 hours or quarterly, whichever comes first.

Maintaining electrical wiring in good condition is essential to safe operation and good machine performance. Failure to find and replace burnt, chafed, corroded or pinched wires could result in unsafe operating conditions and may cause component damage.

WARNING Electrocution/burn hazard. Contact with hot or live circuits could result in death or serious injury. Remove all rings, watches and other jewelry.

1 Open the engine side turntable cover.

2 Remove the engine tray retaining fastener located under the engine tray. Swing the engine tray out and away from the machine.

3 Install the fastener that was just removed through the engine tray and into the engine tray anchor hole in the turntable.

WARNING Crushing hazard. Failure to install the fastener into the engine tray anchor hole to secure the engine tray from moving could result in death or serious injury.

4 Inspect the following areas for burnt, chafed, corroded and loose wires:
- Engine wiring harness
- Hydraulic manifold wiring

5 Open the ground controls side turntable cover.

6 Inspect the following areas for burnt, chafed, corroded and loose wires:
- Inside of the ground control box
- Hydraulic manifold wiring

7 Inspect for a liberal coating of dielectric grease at the following location:
- All wire harnesses connectors to the ground control box

8 Start the engine from the ground controls and raise the boom above the turntable covers.

9 Inspect the turntable area for burnt, chafed and pinched cables.

10 Lower the boom to the stowed position and turn the engine off.

11 Inspect the following areas for burnt, chafed, corroded, pinched and loose wires:
- Cable track on the primary boom
- Cables on the primary, and jib booms
- Jib boom/Platform rotate manifold
- Inside of the platform control box

12 Inspect for a liberal coating of dielectric grease at the following location:
- All wire harnesses connectors to the platform control box

13 Swing the engine back to its original position and install the engine tray retaining fastener.

B-3
Check the Exhaust System

Note: Genie specifications require that this procedure be performed every 250 hours or quarterly, whichever comes first.

Maintaining the exhaust system is essential to good engine performance and service life. Running the engine with a damaged or leaking exhaust system can cause component damage and unsafe operating conditions.

WARNING Bodily injury hazard. Do not inspect while the engine is running. Remove the key to secure from operation.

CAUTION Burn hazard. Beware of hot engine components. Contact with hot engine components may result in severe burns.

1 Remove the engine tray retaining fastener located under the engine tray. Swing the engine tray out and away from the machine.

2 Install the fastener that was just removed through the engine tray and into the engine tray anchor hole in the turntable.

WARNING Crushing hazard. Failure to install the fastener into the engine tray anchor hole to secure the engine tray from moving could result in death or serious injury.

3 Be sure that all nuts and bolts are tight.

4 Inspect all welds for cracks.

5 Inspect for exhaust leaks; i.e., carbon buildup around seams and joints.

6 Swing the engine back to its original position and install the engine tray retaining fastener.

CHECKLIST B PROCEDURES

B-4
Inspect the Engine Air Filter - Ford, Deutz and Perkins Models

Note: Genie specifications require that this procedure be performed every 250 hours or quarterly, whichever comes first.

Maintaining the engine air filter in good condition is essential to good engine performance and service life. Failure to perform this procedure can lead to poor engine performance and component damage.

Note: Perform this procedure with the engine off.

1 Locate the engine air filter assembly.

2 Release the latches from the air cleaner canister end cap. Remove the end cap.

3 Remove the filter element.

4 Clean the inside of the canister and the end cap with a damp cloth.

5 Inspect the air filter element. If needed, blow from the inside out using low pressure dry compressed air, or carefully tap out dust. Replace the filter if needed.

6 Install the filter element.

7 Install the air filter canister end cap and secure the end cap latches.

Note: Be sure the discharge valve is pointing down when the cap is instaled.

B-5
Check the Oil Cooler and Cooling Fins - Deutz Models

Note: Genie specifications require that this procedure be performed every 250 hours or quarterly, whichever comes first.

Maintaining the oil cooler in good condition is essential for good engine performance. Operating a machine with a damaged oil cooler may result in engine damage. Also, restricting air flow through the oil cooler will affect the performance of the cooling system.

WARNING Bodily injury hazard. Do not inspect while the engine is running. Remove the key to secure from operation.

CAUTION Burn hazard. Beware of hot engine components. Contact with hot engine components may result in severe burns.

Oil cooler:

1 Remove the engine tray retaining fastener located under the engine tray. Swing the engine tray out and away from the machine.

2 Install the fastener that was just removed through the engine tray and into the engine tray anchor hole in the turntable.

WARNING Crushing hazard. Failure to install the fastener into the engine tray anchor hole to secure the engine tray from moving could result in death or serious injury.

3 Remove the fasteners from the engine side cover, then remove the cover.

4 Inspect the oil cooler for leaks and physical damage.

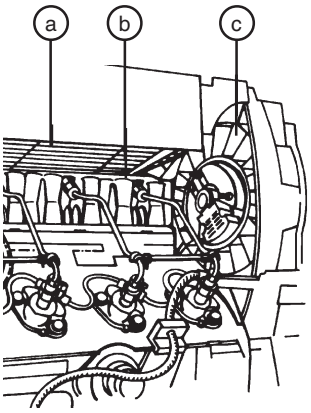

a oil cooler
b cylinder head cooling fins
c fan blower fins

5 Clean the oil cooler of debris and foreign material.

Cooling and fan blower fins:

6 Inspect the fan blower fins for physical damage.

7 Clean the fan blower fins of debris and foreign material.

8 Inspect the head cooling passages and fins for physical damage or foreign material, using a flashlight.

9 Clean the cylinder head cooling passages of debris and foreign material.

10 Install the engine side cover.

11 Swing the engine back to its original position and install the engine pivot plate retaining fastener.

B-6
Inspect the Tires, Wheels and Lug Nut Torque

Note: Genie specifications require that this procedure be performed every 250 hours or quarterly, whichever comes first.

Maintaining the tires and wheels, including proper wheel fastener torque, is essential to safe operation and good performance. Tire and/or wheel failure could result in a machine tip-over. Component damage may also result if problems are not discovered and repaired in a timely fashion.

WARNING Bodily injury hazard. An over-inflated tire can explode and could cause death or serious injury.

WARNING Tip-over hazard. Do not use temporary flat tire repair products.

Note: The tires on some machines are foam-filled and do not need air added to them.

1 Check all tire treads and sidewalls for cuts, cracks, punctures and unusual wear.

2 Check each wheel for damage, bends and cracked welds.

3 Check each lug nut for proper torque. Refer to Section 2, *Specifications*.

4 Check the pressure in each air-filled tire. Refer to Section 2, *Specifications*.

CHECKLIST B PROCEDURES

B-7
Confirm the Proper Brake Configuration

Note: Genie specifications require that this procedure be performed every 250 hours or quarterly, whichever comes first.

Proper brake configuration is essential to safe operation and good machine performance. Hydrostatic brakes and hydraulically-released, spring-applied individual wheel brakes can appear to operate normally when they are actually not fully operational.

1 Check each drive hub disconnect cap to be sure it is in the engaged position.

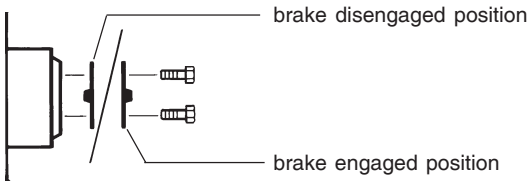

B-8
Check the Drive Hub Oil Level and Fastener Torque

Note: Genie specifications require that this procedure be performed every 250 hours or quarterly, whichever comes first.

Failure to maintain proper drive hub oil levels may cause the machine to perform poorly and continued use may cause component damage.

1 Drive the machine to rotate the hub until the plugs are located one on top and the other at 90 degrees.

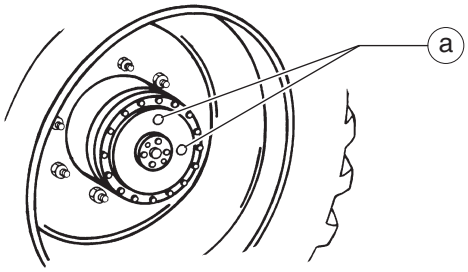

a drive hub plugs

2 Remove the plug located at 90 degrees and check the oil level.

⊙ Result: The oil level should be even with the bottom of the side plug hole.

3 If necessary, remove the top plug and add oil until the oil level is even with the bottom of the side plug hole.

4 Install the plug(s) into the drive hub.

5 Check the torque of the drive hub mounting bolts. Refer to Section 2, *Specifications*.

6 Repeat this procedure for each drive hub.

CHECKLIST B PROCEDURES

Turntable rotate drive hub

1 Remove the plug located on the side of the hub and check the oil level.

⊙ Result: The oil level should be even with the bottom of the plug hole.

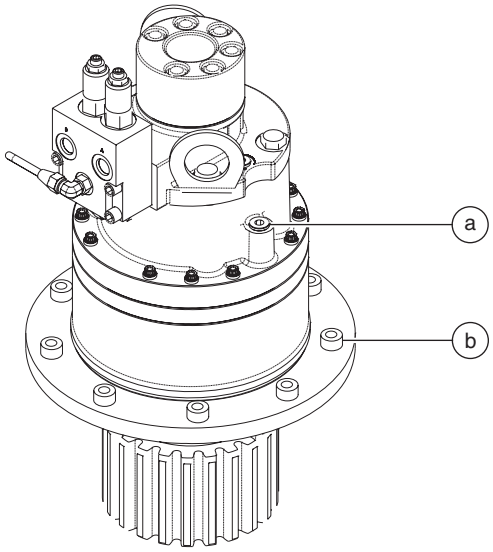

a drain/fill plug
b mounting fasteners

2 If necessary, add oil until the oil level is even with the bottom of the plug hole.

3 Apply pipe thread sealant to the plug, and install the plug in the drive hub.

4 Check the torque of the turntable drive hub mounting fasteners. Refer to Section 2, *Specifications*.

CHECKLIST B PROCEDURES

B-9
Check and Adjust the Engine RPM - Ford and Deutz Models

Note: Genie specifications require that this procedure be performed every 250 hours or quarterly, whichever comes first.

Maintaining the engine rpm at the proper setting for both low and high idle is essential to good engine performance and service life. The machine will not operate properly if the rpm is incorrect and continued use may cause component damage.

Ford models:

Note: The engine rpm is controlled by the ECM and can only be adjusted by re-programming the ECM. If rpm adjustment or service is required, please contact Genie Service Department OR your local Ford dealer.

Deutz models:

Note: This procedure will require two people.

1 Remove the engine tray retaining fastener located under the engine tray. Swing the engine tray out and away from the machine.

2 Install the fastener that was just removed through the engine tray and into the engine tray anchor hole in the turntable.

WARNING Crushing hazard. Failure to install the fastener into the engine tray anchor hole to secure the engine tray from moving could result in death or serious injury.

3 Connect a tachometer to the engine, and then start the engine from the ground controls and check the rpm. Refer to Section 2, *Specifications*.

Skip to step 5 if the low idle rpm is correct.

4 Loosen the low idle lock nut, then turn the low idle adjustment screw clockwise to increase the rpm or counterclockwise to decrease the rpm. Tighten the low idle lock nut and recheck the rpm.

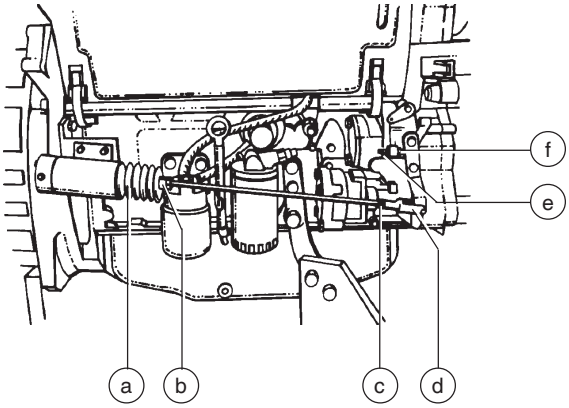

a solenoid boot
b high idle adjustment nut
c yoke lock nut
d yoke
e low idle adjustment screw
f low idle lock nut

5 Move the function enable/rpm select toggle switch to the high idle (rabbit symbol) position at the ground controls and check the rpm. Refer to Section 2, *Specifications*.

If high idle rpm is correct, disregard adjustment step 6.

6 Loosen the yoke lock nut, then turn the high idle adjustment nut and solenoid boot counterclockwise to increase the rpm or clockwise to decrease the rpm. Tighten the yoke lock nut and recheck the rpm.

Note: Be sure the solenoid fully retracts when activating high idle.

7 Swing the engine back to its original position and install the engine pivot plate retaining fastener.

B-10 Test the Ground Control Override

Note: Genie specifications require that this procedure be performed every 250 hours or quarterly, whichever comes first.

A properly functioning ground control override is essential to safe machine operation. The ground control override function is intended to allow ground personnel to operate the machine from the ground controls whether or not the Emergency Stop button on the platform controls is in the on or off position. This function is particularly useful if the operator at the platform controls cannot return the boom to the stowed position.

1 Push in the platform red Emergency Stop button to the off position.

2 Start the engine from the ground controls.

3 At the ground controls, operate each boom function through a partial cycle.

⊙ Result: All boom functions should operate.

CHECKLIST B PROCEDURES

B-11
Check the Oscillate Directional Valve Linkage

Note: Genie specifications require that this procedure be performed every 250 hours or quarterly, whichever comes first.

Note: Perform this test only on models equipped with a oscillating axle.

Proper axle oscillation is essential to safe machine operation. If the oscillate directional valve linkage is not operating correctly, the stability of the machine is compromised and it may tip over.

1 Remove the drive chassis cover from the non-steer end of the machine.

2 Locate the oscillate directional valve inside of the non-steer axle and inspect the linkage for the following:

- Lock nut is tight against yoke
- Yoke clevis pins are installed
- Cotter pins are installed through clevis pins
- Linkage is properly attached to directional valve

B-12
Test the Platform Self-leveling

Note: Genie specifications require that this procedure be performed every 250 hours or quarterly, whichever comes first.

Automatic platform self-leveling throughout the full cycle of boom raising and lowering is essential for safe machine operation. The platform is maintained at level by the platform leveling slave cylinder which operates in a closed loop hydraulic circuit with the master cylinder located at the base of the boom.
A platform self-leveling failure creates an unsafe working condition for platform and ground personnel.

1 Start the engine from the ground controls and lower the boom into the stowed position.

2 Hold the function enable/rpm select toggle switch to either side and adjust the platform to a level position using the platform level toggle switch.

3 Raise and lower the primary boom through a full cycle.

⊙ Result: The platform should remain level at all times to within ±5 degrees.

B-13
Test the Engine Idle Select

Note: Genie specifications require that this procedure be performed every 250 hours or quarterly, whichever comes first.

A properly operating engine idle select switch is essential to good engine performance and safe machine operation. There are two settings.

Foot switch activated low idle (turtle symbol) allows the operator to control individual boom functions.

Foot switch activated high idle (rabbit symbol) should be used for normal machine operation. This selection activates high idle only when the foot switch is pressed down.

1 Pull out the red Emergency Stop button to the on position at both the ground and platform controls.

2 Start the engine from the ground controls then move and hold the function enable/rpm select toggle switch to the high idle (rabbit symbol).

⊙ Result: The engine should change to high idle.

3 Release the function enable/rpm select toggle switch.

⊙ Result: The engine should return to low idle.

4 Turn the key switch to platform controls.

5 Move the engine idle control switch to foot switch activated high idle (rabbit and foot switch symbol).

⊙ Result: The engine should **not** change to high idle.

6 Press down the foot switch.

⊙ Result: The engine should change to high idle.

7 Move the engine idle control switch to foot switch activated low idle (turtle symbol).

⊙ Result: The engine should change to low idle.

CHECKLIST B PROCEDURES

B-14
Test the Fuel Select Operation - GM and Ford Models

Note: Genie specifications require that this procedure be performed every 250 hours or quarterly, whichever comes first.

The ability to select and switch between gasoline and LPG fuels as needed is essential to safe machine operation. A fuel selection can be made when the engine is running or not. Switching malfunctions and/or the failure of the engine to start and run properly in both fuel modes and through all idle speeds can indicate fuel system problems that could develop into a hazardous situation.

Note: Perform this test after checking the gasoline and LPG fuel levels, and warming the engine to normal operating temperature.

1 At the platform controls, move the fuel select switch to gasoline and then move the engine idle control switch to foot switch activated high idle (rabbit and foot switch symbol).

2 Start the engine from the platform controls and allow it to run at low idle.

3 Press down the foot switch to allow the engine to run at high idle.

⊙ Result: The engine should start promptly and operate smoothly in low and high idle.

4 Release the foot switch and shut the engine off by pushing in the red Emergency Stop button in to the off position.

5 Move the fuel select switch to LPG.

6 Restart the engine and allow it to run at low idle.

7 Press down the foot switch to allow the engine to run at high idle.

⊙ Result: The engine should start promptly and operate smoothly in low and high idle.

Note: The engine may hesitate momentarily and then continue to run on the selected fuel if the fuel source is switched while the engine is running.

B-15
Test the Drive Brakes

Note: Genie specifications require that this procedure be performed every 250 hours or quarterly, whichever comes first.

Proper brake action is essential to safe machine operation. The drive brake function should operate smoothly, free of hesitation, jerking and unusual noise. Hydrostatic brakes and hydraulically-released individual wheel brakes can appear to operate normally when they are actually not fully operational.

WARNING Collision hazard. Be sure that the machine is not in free-wheel or partial free-wheel configuration. See B-7, *Confirm the Proper Brake Configuration*.

Note: Select a test area that is firm, level and free of obstructions.

1 Mark a test line on the ground for reference.

2 Start the engine from the platform controls.

3 Move the engine idle control switch to foot switch activated high idle (rabbit and foot switch symbol), then lower the boom into the stowed position.

4 Choose a point on the machine; i.e., contact patch of a tire, as a visual reference for use when crossing the test line.

5 Bring the machine to top drive speed before reaching the test line. Release the drive joystick when your reference point on the machine crosses the test line.

6 Measure the distance between the test line and your machine reference point. Refer to Section 2, *Specifications.*

Note: The brakes must be able to hold the machine on any slope it is able to climb.

CHECKLIST B PROCEDURES

B-16
Test the Drive Speed - Stowed Position

Note: Genie specifications require that this procedure be performed every 250 hours or quarterly, whichever comes first.

Proper drive function movement is essential to safe machine operation. The drive function should respond quickly and smoothly to operator control. Drive performance should also be free of hesitation, jerking and unusual noise over the entire proportionally controlled speed range.

Note: Select a test area that is firm, level and free of obstructions.

1 Create start and finish lines by marking two lines on the ground 40 feet / 12.2 m apart.

2 Start the engine from the platform controls.

3 Move the engine idle control switch to foot switch activated high idle (rabbit and foot switch symbol), then lower the boom into the stowed position.

4 Choose a point on the machine; i.e., contact patch of a tire, as a visual reference for use when crossing the start and finish lines.

5 Bring the machine to top drive speed before reaching the start line. Begin timing when your reference point on the machine crosses the start line.

6 Continue at full speed and note the time when the machine reference point crosses the finish line. Refer to Section 2, *Specifications.*

B-17
Test the Drive Speed - Raised or Extended Position

Note: Genie specifications require that this procedure be performed every 250 hours or quarterly, whichever comes first.

Proper drive function movement is essential to safe machine operation. The drive function should respond quickly and smoothly to operator control. Drive performance should also be free of hesitation, jerking and unusual noise over the entire proportionally controlled speed range.

Note: Select a test area that is firm, level and free of obstructions.

1 Create start and finish lines by marking two lines on the ground 40 feet / 12.2 m apart.

2 Start the engine from the platform controls.

3 Move the engine idle select switch to foot switch activated high idle (rabbit and foot switch symbol).

4 Press down the foot switch and raise the primary boom above horizontal.

5 Choose a point on the machine; i.e., contact patch of a tire, as a visual reference for use when crossing the start and finish lines.

6 Bring the machine to top drive speed before reaching the start line. Begin timing when your reference point on the machine crosses the start line.

7 Continue at full speed and note the time when the machine reference point crosses the finish line. Refer to Section 2, *Specifications.*

8 Lower the boom to the stowed position and extend the boom 1 foot / 30 cm.

9 Choose a point on the machine; i.e., contact patch of a tire, as a visual reference for use when crossing the start and finish lines.

10 Bring the machine to top drive speed before reaching the start line. Begin timing when your reference point on the machine crosses the start line.

11 Continue at top speed and note the time when the machine reference point crosses the finish line. Refer to Section 2, *Specifications.*

B-18
Test the Alarm Package - Optional Equipment

Note: Genie specifications require that this procedure be performed every 250 hours or quarterly, whichever comes first.

The alarm package includes:

- Travel alarm
- Descent alarm
- Flashing beacon

Alarms and a beacon are installed to alert operators and ground personnel of machine proximity and motion. The alarm package is installed on the turntable covers.

Note: The alarms and beacon will operate with the engine running or not running.

1 Turn the key switch to ground control and pull out the red Emergency Stop button to the on position at both the ground and platform controls.

⊙ Result: The flashing beacon should be on and flashing.

2 Move the function enable/rpm select toggle switch to either side and activate the boom toggle switch in the down position, hold for a moment and then release it.

⊙ Result: The descent alarm should sound when the switch is held down.

CHECKLIST B PROCEDURES

3 **S-65:** Move the function enable/rpm select toggle switch to either side and activate the jib boom toggle switch in the down position, hold for a moment and then release it.

⊙ Result: The descent alarm should sound when the switch is held down.

4 Turn the key switch to platform control.

⊙ Result: The flashing beacon should be on and flashing.

5 Press down the foot switch. Move the boom control handle to the down position, hold for a moment and then release it.

⊙ Result: The descent alarm should sound when the control handle is held down.

6 **S-65:** Press down the foot switch. Move the jib boom toggle switch to the down position, hold for a moment and then release it.

⊙ Result: The descent alarm should sound when the control handle is held down.

7 Press down the foot switch. Move the drive control handle off center, hold for a moment and then release it. Move the drive control handle off center in the opposite direction, hold for a moment and then release it.

⊙ Result: The travel alarm should sound when the drive control handle is moved off center in either direction.

B-19
Perform Hydraulic Oil Analysis

Note: Genie specifications require that this procedure be performed every 250 hours or quarterly, whichever comes first.

Replacement or testing of the hydraulic oil is essential for good machine performance and service life. Dirty oil and a clogged suction strainer may cause the machine to perform poorly and continued use may cause component damage. Extremely dirty conditions may require oil changes to be performed more often. For hydraulic oil specifications, refer to Section 2, *Specifications*.

Note: Before replacing the hydraulic oil, the oil may be tested by an oil distributor for specific levels of contamination to verify that changing the oil is necessary. **If the hydraulic oil is not replaced at the two year inspection, test the oil quarterly. Replace the oil when it fails the test.**
See E-1, *Test or Replace the Hydraulic Oil.*

B-20
Inspect the Fuel and Hydraulic Tank Cap Venting Systems

Note: Genie requires that this procedure be performed every 250 hours or quarterly, whichever comes first. Perform this procedure more often if dusty conditions exist.

Free-breathing fuel and hydraulic tank caps are essential for good machine performance and service life. A dirty or clogged tank cap may cause the machine to perform poorly and continued use may cause component damage. Extremely dirty conditions may require that the caps be inspected more often.

Note: Explosion and fire hazard. Engine fuels are combustible. Perform this procedure in an open, well-ventilated area away from heaters, sparks, flames and lighted tobacco. Always have an approved fire extinguisher within easy reach.

Note: Perform this procedure with the engine off.

1 Remove the cap from the fuel tank.

2 Check for proper venting.

⊙ Result: Air passes through the fuel tank cap. Proceed to step 4.

⊠ Result: If air does not pass through the cap, clean or replace the cap. Proceed to step 3.

Note: When checking for positive tank cap venting, air should pass freely through the cap.

3 Using a mild solvent, carefully wash the cap venting system. Dry using low pressure compressed air. Repeat this procedure beginning with step 2.

4 Install the fuel tank cap onto the fuel tank.

5 Remove the breather cap from the hydraulic tank.

6 Check for proper venting.

⊙ Result: Air passes through the fuel tank cap. Proceed to step 8.

⊠ Result: If air does not pass through the cap, clean or replace the cap. Proceed to step 7.

Note: When checking for positive tank cap venting, air should pass freely through the cap.

7 Using a mild solvent, carefully wash the cap venting system. Dry using low pressure compressed air. Repeat this procedure beginning with step 6.

8 Install the breather cap onto the hydraulic tank.

CHECKLIST B PROCEDURES

B-21
Replace the Fuel Filter Element - Perkins Models

Note: Engine specifications require that this procedure be performed every 250 hours or quarterly, whichever comes first.

Replacing the diesel fuel filter element is essential for good engine performance and service life. A dirty or clogged filter may cause the engine to perform poorly and continued use may cause component damage. Extremely dirty conditions may required that the filter be replaced more often.

Note: Explosion and fire hazard. Engine fuels are combustible. Perform this procedure in an open, well-ventilated area away from heaters, sparks, flames and lighted tobacco. Always have an approved fire extinguisher within easy reach.

Note: Perform this procedure with the engine off.

1 Remove the engine tray retaining fastener located under the engine tray. Swing the engine tray out and away from the machine.

2 Install the fastener that was just removed through the engine tray and into the engine tray anchor hole in the turntable.

WARNING Crushing hazard. Failure to install the fastener into the engine tray anchor hole to secure the engine tray from moving could result in death or serious injury.

3 Thoroughly clean the outside surfaces of the fuel filter assembly.

4 Place a suitable container under the fuel filter element.

5 Disconnect and plug the fuel line from the fuel pump to the fuel filter element.

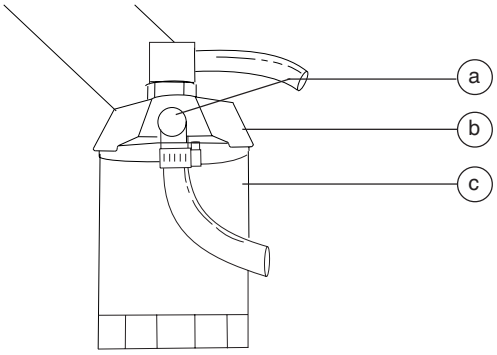

a fuel line
b filter head
c fuel filter element

6 Remove the fuel filter element with a filter wrench.

7 Apply a thin layer of fuel to the new fuel filter element O-ring.

8 Install the new fuel filter element and tighten it securely by hand. Clean up any fuel that may have spilled during the installation procedure.

9 Use a permanent ink marker to write the date and number of hours from the hour meter on the oil filter housing.

Bleed the fuel system:

10 Loosen the vent plug on top of the fuel injection pump.

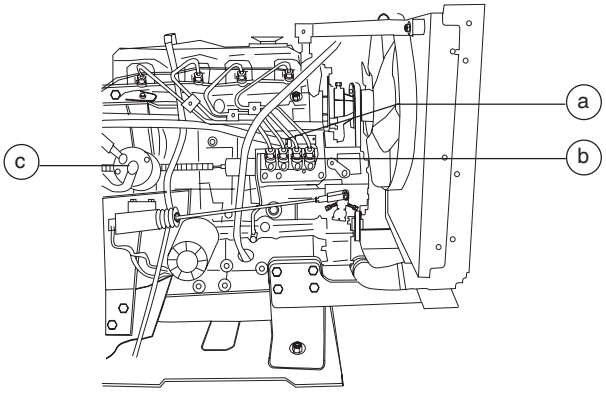

a vent plug
b fuel injection pump
c fuel lift pump

11 Operate the priming lever or priming bulb (if equipped) of the fuel lift pump until fuel, free from air, comes from the vent plug. Tighten the vent plug.

12 Clean up any fuel that may have spilled during this procedure.

13 Operate the starter motor for intervals of 15 seconds until the engine starts.

14 Swing the engine back to its original position and install the engine pivot plate retaining fastener.

Note: It is important to allow the starter motor to cool for 30 seconds between each 15 second interval of operation.

Note: If the engine runs correctly for a short time and then stops or runs roughly, check for air in the fuel system. If there is air in the fuel system, there is probably a leak in the low pressure side of the system.

B-22 Inspect the Boom Extend/Retract Cables

Note: Genie specifications require that this procedure be performed every 250 hours or quarterly, whichever comes first.

The boom extend/retract cables are responsible for the extension and retraction of the number 3 boom tube. Inspecting for foreign objects, damage and/or improper adjustment of the boom extend/retract cables and related components on a regular basis is essential to good machine performance and safe machine operation. The boom extend and retract functions should operate smoothly and be free of hesitation, jerking and unusual noise.

1 Raise the boom to horizontal and fully extend the boom.

2 After the boom is fully extended, lower the boom until the platform is at chest height. Turn the machine off.

3 **S-60 and S-65:** Remove the boom end cover retaining fasteners and remove the cover.

S-60 HC: Remove the boom end cover from the pivot end of the boom while guiding the small cable from the string potentiometer out of the slot of the cover. Rest the cover and string potentiometer on the counterweight.

NOTICE Component damage hazard. The cable from the string potentiometer can become damaged if it is kinked or pinched.

CHECKLIST B PROCEDURES

4 Remove the retaining fasteners from the access covers located on the side of the boom at the platform end of the machine. Remove the covers.

5 Visually inspect the cables and components through both inspection holes for the following:

- Frayed or broken wire strands
- Kinks in the cables
- Corrosion
- Paint or foreign materials on the cable
- Split or cracked cable ends
- Cables are on all pulleys
- Extend cable break limit switch arm is centered in the pivot plate
- Cables have equal tension
- Cables at end of adjustment range
- No broken or damaged pulleys
- No unusual or excessive pulley wear
- All fasteners in place and secure
- **S-60 HC:** String potentiometer cable break limit switch arm is securely attached to end of cable

Note: A flashlight and inspection mirror may be necessary to thoroughly inspect the above items.

Note: A pulley groove gauge should be used to check the condition of the pulleys.

6 **S-60 and S-65:** Install the cover at the pivot end of the boom.

S-60 HC: Install the boom end cover at the pivot end of the boom while guiding the small cable from the string potentiometer into the slot of the cover.

NOTICE Component damage hazard. The cable from the string potentiometer can become damaged if it is kinked or pinched.

Note: Be sure the cable from the string potentiometer is correctly routed around the small pulley before installing the boom end cover.

7 Install the access panels on the sides of the boom.

8 Start the engine from the ground controls and fully retract and lower the boom to the stowed position.

9 Turn the key switch to the platform controls.

10 Extend the boom approximately 2 feet / 0.6 m.

11 Retract the boom. While retracting the boom, visually inspect the number 2 and number 3 boom tubes.

⊙ Result: The number 2 boom tube should not move more than 1/2 inch / 13 mm before the number 3 boom tube begins to retract.

Note: If the number 2 boom tube moves more than 1/2 inch / 13 mm before the number 3 boom tube begins to retract, the boom extend/retract cables need to be adjusted. See Repair Procedure 4-5, *How to Adjust the Boom Extend/Retract Cables.*

B-23
Perform Engine Maintenance - Deutz Models

Note: Engine specifications require that this procedure be performed every 400 hours.

Proper engine maintenance, following the engine manufacturer's maintenance schedule, is essential to good engine performance and service life. Failure to perform the maintenance procedures can lead to poor engine performance and component damage.

Required maintenance procedures and additional engine information are available in the *Deutz FL 2011 Operation Manual* (Deutz part number 0297-9929).

Deutz FL 2011 Operation Manual	
Genie part number	84794

To access the engine:

1 Remove the engine tray retaining fastener located under the engine tray. Swing the engine tray out and away from the machine.

2 Install the fastener that was just removed through the engine tray and into the engine tray anchor hole in the turntable.

⚠WARNING Crushing hazard. Failure to install the fastener into the engine tray anchor hole to secure the engine tray from moving could result in death or serious injury.

B-24
Perform Engine Maintenance - GM and Ford Models

Note: Engine specifications require that this procedure be performed every 400 hours.

Proper engine maintenance, following the engine manufacturer's maintenance schedule, is essential to good engine performance and service life. Failure to perform the maintenance procedures can lead to poor engine performance and component damage.

Required maintenance procedures and additional engine information are available in the *GM 3.0L Operator Handbook* (GM part number 36100007) OR the *Ford LRG-425 EFI Operator Handbook* (Ford part number FPP 194-302) OR the *Ford DSG-423 EFI Operator Handbook* (EDI part number 1060020).

GM 3.0L Operator Handbook	
Genie part number	101095
Ford LRG 425 EFI Operator Handbook	
Genie part number	84792
Ford DSG 423 EFI Operator Handbook	
Genie part number	119488

CHECKLIST B PROCEDURES

B-25
Replace the Engine Air Filter Element - GM and Ford Models

Note: Engine specifications require that this procedure be performed every 400 hours.

Maintaining the engine air filter in good condition is essential to good engine performance and service life. Failure to perform this procedure can lead to poor engine performance and component damage.

Note: Perform this procedure with the engine off.

1 Locate the engine air filter assembly.

2 Release the latches from the air cleaner canister end cap. Remove the end cap.

3 Remove and discard the filter element.

4 Clean the inside of the canister and the end cap with a damp cloth.

5 Install the new filter element.

6 Install the air filter canister end cap and secure the end cap latches.

Note: Be sure the discharge valve is pointing down when the cap is instaled.

B-26
Perform Engine Maintenance - Perkins Models

Note: Engine specifications require that this procedure be performed every 400 hours.

Proper engine maintenance, following the engine manufacturer's maintenance schedule, is essential to good engine performance and service life. Failure to perform the maintenance procedures can lead to poor engine performance and component damage.

Required maintenance procedures and additional engine information are available in the *Perkins 400 Series Operation Manual* (Perkins part number TPD 1443S).

Perkins 400 Series Operation Manual	
Genie part number	94890

To access the engine:

1 Remove the engine tray retaining fastener located under the engine tray. Swing the engine tray out and away from the machine.

2 Install the fastener that was just removed through the engine tray and into the engine tray anchor hole in the turntable.

WARNING Crushing hazard. Failure to install the fastener into the engine tray anchor hole to secure the engine tray from moving could result in death or serious injury.

Checklist C Procedures

C-1
Perform Engine Maintenance - Deutz Models

Note: Engine specifications require that this procedure be performed every 500 hours.

Proper engine maintenance, following the engine manufacturer's maintenance schedule, is essential to good engine performance and service life. Failure to perform the maintenance procedures can lead to poor engine performance and component damage.

Required maintenance procedures and additional engine information are available in the *Deutz FL 2011 Operation Manual* (Deutz part number 0297-9929).

Deutz FL 2011 Operation Manual	
Genie part number	84794

To access the engine:

1 Remove the engine tray retaining fastener located under the engine tray. Swing the engine tray out and away from the machine.

2 Install the fastener that was just removed through the engine tray and into the engine tray anchor hole in the turntable.

WARNING Crushing hazard. Failure to install the fastener into the engine tray anchor hole to secure the engine tray from moving could result in death or serious injury.

C-2
Grease the Platform Overload Mechanism, S-60 and S-65 (if equipped)

Note: Genie specifications require that this procedure be performed every 500 hours or six months, whichever comes first. Perform this procedure more often if dusty conditions exist.

Application of lubrication to the platform overload mechanism is essential to safe machine operation. Continued use of an improperly greased platform overload mechanism could result in the system not sensing an overloaded platform condition and will result in component damage.

1 Locate the grease fittings on each pivot pin of the platform overload assembly.

2 Thoroughly pump grease into each grease fitting.

Grease Specification
Chevron Ultra-duty grease, EP NLGI 2 (lithium based) or equivalent

CHECKLIST C PROCEDURES

C-3
Test the Platform Overload System, S-60 and S-65 (if equipped)

Note: Genie specifications require that this procedure be performed every 500 hours or six months, whichever comes first.

Testing the platform overload system regularly is essential to safe machine operation. Continued use of an improperly operating platform overload system could result in the system not sensing an overloaded platform condition. Machine stablity could be compromised resulting in the machine tipping over.

The platform overload system is designed to detect an overloaded platform and prevent machine operation anytime the machine is turned on. When activated, the system halts all normal boom operation, giving visual and audible warning to the operator.

Models equipped with the platform overload option are provided with additional machine components: an adjustable spring-loaded platform support subassembly, a limit switch, an electronic module which receives the overload signal and interrupts power, and an audio/visual warning indication to alert the operator of the overload.

The platform support subassembly utilizes two load support arms that are opposed in a full parallelogram link. This isolates platform loads into a shear or vertical state, which translates into a compressive load. A spring in the parallelogram link supports this purely compressive load regardless of where the load is placed in the platform.

As weight is added to the platform, the spring will compress until, when the platform is overloaded, the lower arm contacts a limit switch and thereby activating the overload signal. When adjusted correctly, the platform overload system will deactivate normal boom operation at platform capacity.

Note: Perform this procedure with the boom fully retracted and in the stowed position and with the machine on a firm, level surface.

1 Remove all weight, tools and equipment from the platform.

Note: Failure to remove all weight, tools and accessories from the platform will result in an inaccurate test.

2 Turn the key switch to ground control and pull out the red Emergency Stop button to the on position at both the ground and platform controls. Start the engine from the ground controls and level the platform. Do not turn the engine off.

3 Determine the maximum platform capacity. Refer to the machine serial plate.

CHECKLIST C PROCEDURES

4 Using a suitable lifting device, place a test weight equal to that of the available capacity one of the locations shown.
Refer to Illustration 1.

⊙ Result: The platform overload indicator lights should be off at both the ground and platform controls and the alarm should not sound.

⊠ Result: The platform overload indicator lights are on and the alarm is sounding. Calibrate the platform overload system. Refer to Repair Proceedure 2-3, *How to Calibrate the Platform Overload System, S-60 and S-65 (if equipped).*

5 Carefully move the test weight to each remaining location. Refer to Illustration 1.

⊙ Result: The platform overload indicator lights should be off at both the ground and platform controls and the alarm should not sound.

⊠ Result: The platform overload indicator lights are on and the alarm is sounding. Calibrate the platform overload system. Refer to Repair Proceedure 2-3, *How to Calibrate the Platform Overload System, S-60 and S-65 (if equipped).*

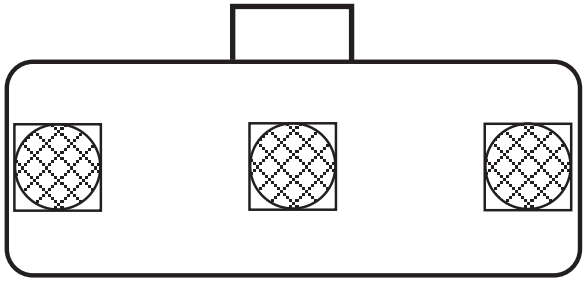

Illustration 1

6 Using a suitable lifting device, place an additional 50 lbs / 23 kg of weight onto the platform.

⊙ Result: The alarm should sound.
The platform overload indicator lights should be flashing at both the ground and platform controls.

⊠ Result: The alarm does not sound and the platform overload indicator lights are not flashing. Calibrate the platform overload system. Refer to Repair Proceedure 2-3, *How to Calibrate the Platform Overload System, S-60 and S-65 (if equipped).*

Note: There may be a 2 second delay before the overload indicator lights flash and the alarm sounds.

7 Carefully move the test weights to each remaining location on the platform.
Refer to Illustration 1.

⊙ Result: The alarm should sound.
The platform overload indicator lights should be flashing at both the ground and platform controls.

⊠ Result: The alarm does not sound and the platform overload indicator lights are not flashing. Calibrate the platform overload system. Refer to Repair Proceedure 2-3, *How to Calibrate the Platform Overload System, S-60 and S-65 (if equipped).*

Note: There may be a 2 second delay before the overload indicator lights flash and the alarm sounds.

CHECKLIST C PROCEDURES

8 Test all machine functions from the platform controls.

⊙ Result: All platform control functions should not operate.

9 Turn the key switch to ground control.

10 Test all machine functions from the ground controls.

⊙ Result: All ground control functions should not operate.

11 Activate the auxiliary power toggle switch.

Note: The engine will turn off when the auxiliary power is activated.

12 Using auxiliary power, test all machine functions from the ground controls.

⊙ Result: All ground control functions should operate.

13 Using a suitable lifting device, lift the additional test weight from the platform.

⊙ Result: The platform overload indicator lights should turn off at both the ground and platform controls and the alarm should not sound.

Note: There may be an 2 second delay before the overload indicator lights and alarm turn off.

14 Start the engine and test all machine functions from the ground controls.

⊙ Result: All ground control functions should operate normally.

15 Turn the key switch to platform control.

16 Test all machine functions from the platform controls.

⊙ Result: All platform control functions should operate.

Note: If the platform overload system is not operating properly, Refer to Repair Procedure 2-3, *How to Calibrate the Platform Overload System, S-60 and S-65 (if equipped).*

17 Using a suitable lifting device, remove the remaining test weights from the platform.

C-4
Test the Platform Load Sense System, S-60 HC

Note: Genie specifications require that this procedure be performed every 500 hours or six months, whichever comes first.

Testing the platform load sense system regularly is essential to safe machine operation. Continued use of an improperly operating platform load sense system could result in the system not sensing an overloaded platform condition. Machine stablity could be compromised resulting in the machine tipping over.

The platform overload system is designed to detect an overloaded platform and prevent machine operation anytime the machine is turned on. When activated, the system halts all normal boom operation, giving visual and audible warning to the operator.

Models equipped with the platform overload option are provided with additional machine components: an adjustable spring-loaded platform support subassembly, a limit switch, an electronic module which receives the overload signal and interrupts power, and an audio/visual warning indication to alert the operator of the overload.

The platform support subassembly utilizes two load support arms that are opposed in a full parallelogram link. This isolates platform loads into a shear or vertical state, which translates into a compressive load. A spring in the parallelogram link supports this purely compressive load regardless of where the load is placed in the platform.

As weight is added to the platform, the spring will compress until, when the platform is overloaded, the lower arm contacts a limit switch and thereby activating the overload signal. When adjusted correctly, the platform overload system will deactivate normal boom operation at platform capacity.

Note: Perform this procedure with the boom fully retracted and in the stowed position and with the machine on a firm, level surface.

Note: Be sure that no load sense system faults exist prior to performing this procedure.

Note: On a properly functioning machine, the LEDs on both control modules, located next to the ground control box, should be off.

Note: If your machine is equipped with any platform accessories or options, they must be removed from the platform OR the weights of those options or accessories must be subtracted from the test weights to accurately calibrate the platform load sense system.

1 Remove all weight, tools and equipment from the platform.

2 Turn the key switch to ground control and pull out the red Emergency Stop button to the on position at both the ground and platform controls.

CHECKLIST C PROCEDURES

3 Start the engine from the ground controls. Do not turn the engine off.

4 Using a suitable lifting device, place an appropriate test weight equal to 750 lbs / 340.2 kg on to the center of the platform floor.

⊙ Result: The amber restricted range of motion LED at the platform controls should come on and the engine should continue to run.

⊠ Result: If the amber restricted range of motion LED at the platform controls does not come on, there is no alarm and the engine continues to run, the platform load sense system needs to be calibrated. See Repair Procedure 2-4, *How to Calibrate the Platform Load Sense System, S-60 HC*.

5 Using a suitable lifting device, place an additional appropriate test weight equal to 501 to 510 lbs / 227.2 to 231.3 kg on to the center of the platform floor. The total weight in the platform must equal 1251 to 1260 lbs / 567.4 to 571.5 kg.

⊙ Result: The alarm should sound and the engine should turn off. The platform overload indicator light should be on at both the ground and platform controls. The platform load sense system is functioning properly.

⊠ Result: If the alarm does not sound, the engine does not turn off or the platform indicator light does not come on at both the ground and platform controls, see Repair Procedure 2-4, *How to Calibrate the Platform Load Sense System, S-60 HC*.

Note: The weight in the platform must be 1200 lbs / 544.3 or less before the engine can be restarted.

6 Using a suitable lifting device, remove the test weights from the platform.

7 Push in the ground controls red Emergency Stop button to the off position, then pull the red Emergency Stop button out to the on position to reset the control system.

Recovery process from the platform controls:

Note: This procedure only operates if the platform is overloaded or enters the safety envelope.

1 With the key switch turned to platform controls, activate the auxiliary power toggle switch.

⊙ Result: The boom will automatically retract until it is in the unrestricted zone.

2 Push in the platform controls red Emergency Stop button to the off position, then pull out the red Emergency Stop button to the on position to reset the system.

3 Start the engine and lower the boom to the stowed position.

Recovery process from the ground controls:

Note: This procedure only operates if the platform is overloaded or enters the safety envelope.

1 Turn the key switch to ground controls.

2 Locate the recovery toggle switch on the side of the ground control box. Activate the recovery toggle switch and the auxiliary power toggle switch at the same time.

⊙ Result: The boom will automatically fully retract and then lower to the stowed position.

3 Push in the ground controls red Emergency Stop button to the off position, then pull out the red Emergency Stop button to the on position to reset the system.

C-5
Replace the Fuel Filter/Water Separator - Perkins Models

Note: Genie specifications require that this procedure be performed every 500 hours or six months, whichever comes first.

Regular replacement of the fuel filter/water separator is essential for good engine performance. Failure to perform this procedure can lead to poor engine performance and/or hard starting, and continued use may result in component damge. Extremely dirty conditions may require this procedure be performed more often.

DANGER Explosion and fire hazard. Engine fuels are combustible. Perform this procedure in an open, well-ventilated area away from heaters, sparks, flames and lighted tobacco. Always have an approved fire extinguisher within easy reach.

Note: Perform this procedure with the engine off.

1 Open the engine side turntable cover and locate the fuel filter/water separator on the bulkhead.

2 Disconnect and plug the fuel supply hose from the fuel tank to the fuel filter/water separator.

3 Loosen the vent plug located on the fuel filter/water separator head.

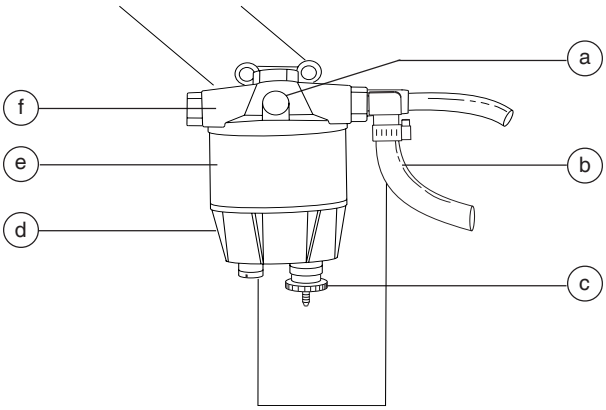

a vent plug
b main fuel line
c drain plug
d filter bowl
e filter element
f separator head

4 Place a suitable container under the filter bowl. Loosen the drain plug located at the bottom of the bowl. Completely drain the fuel.

5 Rotate the filter bowl counterclockwise and remove it from the element.

6 Rotate the filter element counterclockwise and remove it from the filter head.

7 Install the bowl onto the new filter element.

8 Apply a thin layer of oil onto the element gasket. Install the filter/bowl assembly onto the filter head. Tighten the drain plug and vent plug.

CHECKLIST C PROCEDURES

9 Clean up any diesel fuel that may have spilled during the installation procedure.

10 Install the fuel supply hose from the fuel tank to the fuel filter/water separator. Tighten the clamp.

11 Use a permanent ink marker to write the date and number of hours from the hour meter on the oil filter housing.

Bleed the system:

12 Remove the engine tray retaining fastener located under the engine tray. Swing the engine tray out and away from the machine.

13 Install the fastener that was just removed through the engine tray and into the engine tray anchor hole in the turntable.

⚠WARNING Crushing hazard. Failure to install the fastener into the engine tray anchor hole to secure the engine tray from moving could result in death or serious injury.

14 Loosen the vent plug on top of the fuel injection pump.

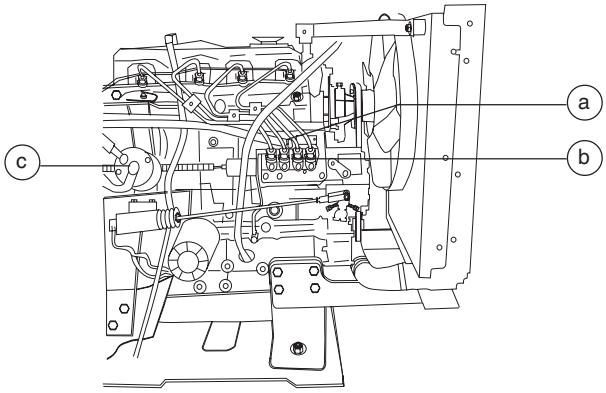

a vent plug
b fuel injection pump
c fuel lift pump

15 Operate the priming lever or priming bulb (if equipped) of the fuel lift pump until fuel, free from air, comes from the vent plug. Tighten the vent plug.

16 Clean up any fuel that may have spilled during this procedure.

17 Operate the starter motor for intervals of 15 seconds until the engine starts.

Note: It is important to allow the starter motor to cool for 30 seconds between each 15 second interval of operation.

Note: If the engine runs correctly for a short time and then stops or runs roughly, check for air in the fuel system. If there is air in the fuel system, there is probably a leak in the low pressure side of the system.

18 Swing the engine back to its original position and install the engine pivot plate retaining fastener.

C-6
Replace the Engine Air Filter Element - Deutz and Perkins Models

Note: Engine specifications require that this procedure be performed every 500 hours or every six months, whichever comes first.

Maintaining the engine air filter in good condition is essential to good engine performance and service life. Failure to perform this procedure can lead to poor engine performance and component damage.

Note: Perform this procedure with the engine off.

1 Locate the engine air filter assembly.

2 Release the latches from the air cleaner canister end cap. Remove the end cap.

3 Remove and discard the filter element.

4 Clean the inside of the canister and the end cap with a damp cloth.

5 Install the new filter element.

6 Install the air filter canister end cap and secure the end cap latches.

C-7
Perform Engine Maintenance - Perkins Models

Note: Engine specifications require that this procedure be performed every 600 hours.

Proper engine maintenance, following the engine manufacturer's maintenance schedule, is essential to good engine performance and service life. Failure to perform the maintenance procedures can lead to poor engine performance and component damage.

Required maintenance procedures and additional engine information are available in the *Perkins 400 Series Operation Manual* (Perkins part number TPD 1443S).

Perkins 400 Series Operation Manual	
Genie part number	94890

CHECKLIST C PROCEDURES

C-8
Perform Engine Maintenance - GM and Ford Models

Note: Engine specifications require that this procedure be performed every 800 hours.

Proper engine maintenance, following the engine manufacturer's maintenance schedule, is essential to good engine performance and service life. Failure to perform the maintenance procedures can lead to poor engine performance and component damage.

Required maintenance procedures and additional engine information are available in the *GM 3.0L Operator Handbook* (GM part number 36100007) OR the *Ford LRG-425 EFI Operator Handbook* (Ford part number FPP 194-302) OR the *Ford DSG-423 EFI Operator Handbook* (EDI part number 1060020).

GM 3.0L Operator Handbook	
Genie part number	101095
Ford LRG 425 EFI Operator Handbook	
Genie part number	84792
Ford DSG 423 EFI Operator Handbook	
Genie part number	119488

Checklist D Procedures

D-1
Check the Boom Wear Pads

Note: Genie specifications require that this procedure be performed every 1000 hours or annually, whichever comes first.

Maintaining the boom wear pads in good condition is essential to safe machine operation. Wear pads are placed on boom tube surfaces to provide a low friction, replaceable wear pad between moving parts. Improperly shimmed wear pads or continued use of worn out wear pads may result in component damage and unsafe operating conditions.

1 Start the engine from the ground controls.

2 Raise the end of the primary boom to a comfortable working height (chest high), then extend the boom 1 foot / 30 cm.

3 Measure each wear pad. Replace the wear pad once it reaches the minimum allowable thickness. If the wear pad is still within specification, shim as necessary to obtain minimum clearance with zero binding.

4 Extend and retract the primary boom through the entire range of motion to check for tight spots that may cause binding or scraping of the boom.

Note: Always maintain squareness between the outer and inner boom tubes.

Wear pad specifications	Minimum
Top and side wear pads (platform end of boom)	1/2 inch 12.7 mm
Bottom wear pads (platform end of boom)	5/8 inch 15.9 mm
Top and side wear pads (pivot end of boom)	1/2 inch 12.7 mm
Bottom wear pads (pivot end of boom)	5/8 inch 15.9 mm

CHECKLIST D PROCEDURES

D-2
Check the Turntable Rotation Bearing Bolts

Note: Genie specifications require that this procedure be performed every 1000 hours or annually, whichever comes first.

Maintaining proper torque on the turntable bearing bolts is essential to safe machine operation. Improper bolt torque could result in an unsafe operating condition and component damage.

1 Raise the boom and place a safety chock on the lift cylinder rod. Carefully lower the boom onto the lift cylinder safety chock.

WARNING Crushing hazard. Keep hands away from cylinders and all moving parts when lowering the boom.

Note: The lift cylinder safety chock is available through Genie
(Genie part number 75097).

2 Turn the engine off.

3 Be sure that each turntable mounting bolt is torqued in sequence to specifications. Refer to Section 2, *Specifications.*

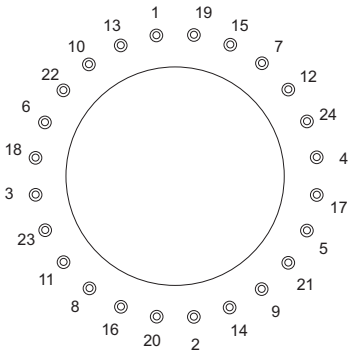

Bolt torque sequence

4 Start the engine form the ground controls.

5 Raise the boom and remove the safety chock.

6 Lower the boom to the stowed position.

7 Remove drive chassis covers from both the steer end and the non-steer end of the machine.

8 Check to ensure that each lower bearing mounting bolt under the drive chassis is torqued in sequence to specifications. Refer to Section 2, *Specifications.*

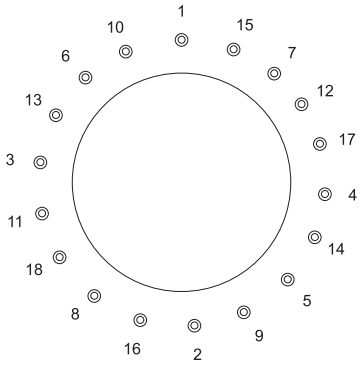

Bolt torque sequence

D-3
Inspect for Turntable Bearing Wear

Note: Genie specifications require that this procedure be performed every 1000 hours or annually, whichever comes first.

Periodic inspection of turntable bearing wear is essential to safe machine operation, good machine performance and service life. Continued use of a worn turntable bearing could create an unsafe operating condition, resulting in death or serious injury and component damage.

Note: Perform this procedure with the machine on a firm, level surface and the boom in the stowed position.

1 Grease the turntable bearing. See A-12, *Grease the Turntable Bearing and Rotate Gear.*

2 Torque the turntable bearing bolts to specification. See D-2, *Check the Turntable Rotation Bearing Bolts.*

3 Start the machine from the ground controls and raise the boom to full height. Do not extend the boom.

4 Place a dial indicator between the drive chassis and the turntable at a point that is directly under, or inline with, the boom and no more than 1 inch / 2.5 cm from the bearing.

Note: To obtain an accurate measurement, place the dial indicator no more than 1 inch / 2.5 cm from the turntable rotation bearing.

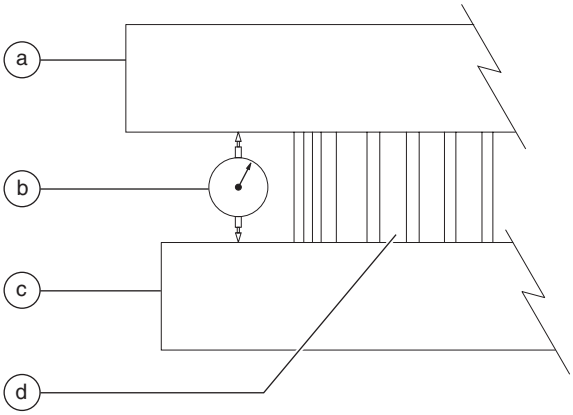

a turntable
b dial indicator
c drive chassis
d turntable rotation bearing

5 At the dial indicator, adjust it to "zero" the indicator.

6 Fully extend the boom and lower to a horizontal position.

7 Note the reading on the dial indicator.

Result: The measurement is less than 0.063 inch / 1.6 mm. The bearing is good.

Result: The measurement is more than 0.063 inch / 1.6 mm. The bearing is worn and needs to be replaced.

CHECKLIST D PROCEDURES

8 Fully retract the boom and raise the boom to full height. Visually inspect the the dial indicator to be sure the needle returns to the "zero" position.

9 Remove the dial indicator and rotate the turntable 90°.

10 Repeat steps 4 through 9 until the rotation bearing has been checked in at least four equally spaced areas 90° apart.

11 Lower the boom to the stowed position and turn the machine off.

12 Remove the dial indicator from the machine.

D-4
Replace the Drive Hub Oil

Note: Genie specifications require that this procedure be performed every 1000 hours or annually, whichever comes first.

Replacing the drive hub oil is essential for good machine performance and service life. Failure to replace the drive hub oil at yearly intervals may cause the machine to perform poorly and continued use may cause component damage.

1 Select the drive hub to be serviced. Then drive the machine until one of the two plugs is at the lowest point.

2 Remove both plugs and drain the oil.

3 Drive the machine until one plug is at the top and the other is at 90 degrees.

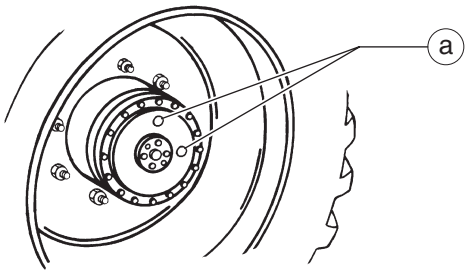

a drive hub plugs

4 Fill the hub with oil from the top hole until the oil level is even with the bottom of the side plug hole. Refer to Section 2, *Specifications.*

5 Install the plugs into the drive hub.

6 Check the torque of the drive hub mounting bolts. Refer to Section 2, *Specifications*.

7 Repeat this procedure for each drive hub.

D-5
Check the Free-wheel Configuration

Note: Genie specifications require that this procedure be performed every 1000 hours or annually, whichever comes first.

Proper use of the free-wheel configuration is essential to safe machine operation. The free-wheel configuration is used primarily for towing. A machine configured to free-wheel without operator knowledge may cause death or serious injury and property damage.

WARNING Collision hazard. Select a work site that is firm and level.

NOTICE Component damage hazard. If the machine must be towed, do not exceed 2 mph / 3.2 km/h.

Non-steer Wheels: All Models

1 Chock the steer wheels to prevent the machine from rolling.

2 Center a lifting jack of ample capacity (20,000 lbs / 10,000 kg) under the drive chassis between the non-steer tires.

3 Lift the wheels off the ground and then place jack stands under the drive chassis for support.

4 Disengage the drive hubs by turning over the drive hub disconnect caps on each non-steer wheel hub.

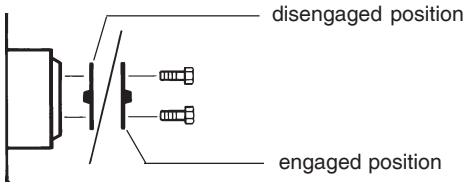

5 Manually rotate each non-steer wheel.

⊙ Result: Each non-steer wheel should rotate with minimum effort.

6 Re-engage the drive hubs by turning over the hub disconnect caps. Rotate each wheel to check for engagement. Lift the machine and remove the jack stands.

WARNING Collision hazard. Failure to re-engage the drive hubs may cause death or serious injury and property damage.

Steer Wheels: 4WD Models

7 Chock the non-steer wheels to prevent the machine from rolling.

8 Center a lifting jack of ample capacity (20,000 lbs / 10,000 kg) under the drive chassis between the steer tires.

9 Lift the wheels off the ground and then place jack stands under the drive chassis for support.

10 Disengage the drive hubs by turning over the drive hub disconnect caps on each steer wheel hub.

CHECKLIST D PROCEDURES

11 Manually rotate each steer wheel.

⊙ Result: Each steer wheel should rotate with minimum effort.

12 Re-engage the drive hubs by turning over the hub disconnect caps. Rotate each wheel to check for engagement. Raise the machine, remove the jack stands and lower the machine.

⚠WARNING Collision hazard. Failure to re-engage the drive hubs may cause death or serious injury and property damage.

D-6
Replace the Hydraulic Filters

Note: Genie requires that this procedure be performed every 1000 hours or annually, whichever comes first. Perform this procedure more often if dusty conditions exist.

Replacement of the hydraulic filters is essential for good machine performance and service life. A dirty or clogged filter may cause the machine to perform poorly and continued use may cause component damage. Extremely dirty conditions may require that the filters be replaced more often.

⚠CAUTION Bodily injury hazard. Beware of hot oil. Contact with hot oil may cause severe burns.

Note: Perform this procedure with the engine off.

Hydraulic return filter:

1 Open the ground controls side turntable cover and locate the hydraulic return filter housing on top of the hydraulic tank.

2 Remove the cap from the filter housing.

3 Lift the handle on the filter element and rotate the element counterclockwise to release the element from the housing.

4 Remove the filter element from the filter housing.

5 Install the new filter element into the filter housing.

6 Push the filter element down to be sure the O-ring on the element is fully seated into the housing.

7 Rotate the filter element clockwise to lock it in place.

8 Install the filter housing cap.

9 Use a permanent ink marker to write the date and number of hours from the hour meter on the oil filter housing.

Medium and high pressure filters:

Note: The medium pressure filter is for the charge pump and the high pressure filter is for all machine functions except the drive circuit and oscillating axle circuit.

10 Open the engine side turntable cover and locate the medium and high pressure filters near the pump.

Note: The medium pressure filter is located on the right. The high pressure filter, with filter condition indicator, is located on the left.

11 Place a suitable container under each filter.

12 Remove the filter housings by using a wrench on the nut provided on the bottom of the housings.

13 Remove the filter elements from the housings.

14 Inspect the housing seals and replace them if necessary.

15 Install the new filter elements into the housings and tighten them securely.

Note: The medium and high pressure filters use the same elements.

16 Clean up any oil that may have spilled during the installation procedure.

17 Use a permanent ink marker to write the date and number of hours from the hour meter on the oil filter housings.

18 Start the engine from the ground controls.

19 Inspect the filter housings and related components to be sure that there are no leaks.

CHECKLIST D PROCEDURES

D-7
Check and Adjust the Air/LPG Mixture - GM Models

Note: Genie specifications require that this procedure be performed every 1000 hours or annually, whichever comes first.

Maintaining the proper air-to-fuel mixture during LPG operation is essential to good engine performance.

DANGER Explosion and fire hazard. Engine fuels are combustible. Perform this procedure in an open, well-ventilated area away from heaters, sparks, flames and lighted tobacco. Always have an approved fire extinguisher within easy reach.

Note: The engine should be warmed to normal operating temperature before performing this procedure.

1 Move the fuel select toggle switch to LPG fuel and start the engine from the ground controls.

2 Locate the high idle mixture adjustment screw on the LPG venturi that attaches to the air cleaner air cleaner hose.

3 Loosen the lock nut on the high idle mixture adjustment screw.

4 Load the system by activating the primary boom retract function, then move the function enable toggle switch to the high idle (rabbit symbol) position.

5 Adjust the high idle adjustment screw to obtain an air-to-fuel mixture ratio of 13.0:1 to 13.2:1, using an exhaust gas analyzer.

Note: Preliminary setting is $^1/_4$ inch / 6.4 mm of threads showing. Measure from top of lock nut to top of adjustment screw.

Note: If an exhaust gas analyzer is not available, adjust to obtain peak or optimum rpm.

6 Hold the adjustment screw and tighten the lock nut.

7 Return the function enable toggle switch to the center position.

8 Locate the low idle mixture adjustment screw on the LPG regulator.

9 Adjust the low idle mixture adjustment screw to obtain an air-to-fuel mixture ratio of 13.0:1 to 13.2:1.

Note: Preliminary setting: turn low idle adjustment screw clockwise all the way in. Turn low idle adjustment screw counterclockwise 2 $^3/_4$ turns.

D-8
Perform Engine Maintenance - Deutz Models

Note: Engine specifications require that this procedure be performed every 1000 hours.

Proper engine maintenance, following the engine manufacturer's maintenance schedule, is essential to good engine performance and service life. Failure to perform the maintenance procedures can lead to poor engine performance and component damage.

Required maintenance procedures and additional engine information are available in the *Deutz FL 2011 Operation Manual* (Deutz part number 0297-9929).

Deutz FL 2011 Operation Manual	
Genie part number	84794

To access the engine:

1 Remove the engine tray retaining fastener located under the engine tray. Swing the engine tray out and away from the machine.

2 Install the fastener that was just removed through the engine tray and into the engine tray anchor hole in the turntable.

⚠WARNING Crushing hazard. Failure to install the fastener into the engine tray anchor hole to secure the engine tray from moving could result in death or serious injury.

Checklist E Procedures

E-1
Test or Replace the Hydraulic Oil

Note: Genie requires that this procedure be performed every 2000 hours or every two years, whichever comes first. Perform this procedure more often if dusty conditions exist.

Replacement or testing of the hydraulic oil is essential for good machine performance and service life. Dirty oil and suction strainers may cause the machine to perform poorly and continued use may cause component damage. Extremely dirty conditions may require oil changes to be performed more often.

Note: Before replacing the hydraulic oil, the oil may be tested by an oil distributor for specific levels of contamination to verify that changing the oil is necessary. **If the hydraulic oil is not replaced at the two year inspection, test the oil quarterly. Replace the oil when it fails the test.**

Note: When removing a hose assembly or fitting, the O-ring (if equipped) on the fitting and/or the hose end must be replaced. All connections must be torqued to specification during installation. Refer to Section 2, *Hydraulic Hose and Fitting Torque Specifications*.

Note: Perform this procedure with the boom in the stowed position.

1 **GM and Ford models:** Turn the valve on the LPG tank clockwise to the off position (if equipped). Then slowly disconnect the hose from the LPG tank.

2 **GM and Ford models:** Open the clamps from the LPG tank straps and remove the LPG tank from the machine (if equipped).

3 **Models with hydraulic tank shut-off valves:** Locate the two hydraulic tank valves at the hydraulic tank through the access hole underneath the turntable. Close the valves.

NOTICE Component damage hazard. The engine must not be started with the hydraulic tank shut-off valves in the closed position or component damage will occur. If the tank valves are closed, remove the key from the key switch and tag the machine to inform personnel of the condition.

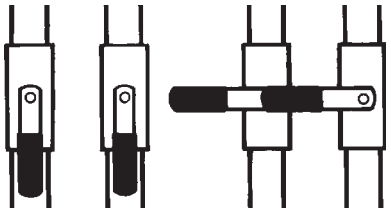

4 Place a suitable container underneath the hydraulic tank.

5 Remove the drain plug from the hydraulic tank.

6 Completely drain the tank into a suitable container. See capacity specifications.

CHECKLIST E PROCEDURES

7 Tag, disconnect and plug the two suction hoses and supply hose for the auxiliary pump from the hydraulic tank. Cap the fittings on the tank.

Note: The hoses can be accessed through the access hole under the turntable.

8 Disconnect and plug the return filter hydraulic hose at the return filter. Cap the fitting on the filter housing.

9 Remove the ground controls side turntable cover.

10 Support the hydraulic tank with an appropriate lifting device.

11 Remove the hydraulic tank mounting fasteners.

12 Remove the hydraulic tank from the machine.

⚠WARNING Crushing hazard. The hydraulic tank could become unbalanced and fall if not properly supported when removed from the machine.

13 Remove the hydraulic return filter housing mounting fasteners. Remove the hydraulic return filter housing from the hydraulic tank.

14 Remove the suction strainers from the tank and clean them using a mild solvent.

15 Rinse out the inside of the tank using a mild solvent.

16 Install the suction strainers using a thread sealant on the threads.

17 Install the drain plug using a thread sealant on the threads.

18 Install the hydraulic return filter housing onto the hydraulic tank.

19 Install the hydraulic tank onto the machine.

20 Install the two suction hoses to the suction strainers.

21 Install the supply hose for the auxiliary power unit and the return filter hose.

22 **Models with hydraulic tank shut-off valves:** Open the two hydraulic tank valves at the hydraulic tank.

23 Fill the tank with hydraulic oil until the level is within the top 2 inches / 5 cm of the sight gauge. Do not overfill.

24 Clean up any oil that may have spilled.

25 Prime the pump. Refer to Repair Procedure 6-2, *How to Prime the Pump.*

Note: Always use pipe thread sealant when installing the suction hose fittings and the drain plug.

CHECKLIST E PROCEDURES

E-2
Perform Engine Maintenance - Deutz Models

Note: Engine specifications require that this procedure be performed every 3000 hours.

Proper engine maintenance, following the engine manufacturer's maintenance schedule, is essential to good engine performance and service life. Failure to perform the maintenance procedures can lead to poor engine performance and component damage.

Required maintenance procedures and additional engine information are available in the *Deutz FL 2011 Operation Manual* (Deutz part number 0297-9929).

Deutz FL 2011 Operation Manual	
Genie part number	84794

To access the engine:

1 Remove the engine tray retaining fastener located under the engine tray. Swing the engine tray out and away from the machine.

2 Install the fastener that was just removed through the engine tray and into the engine tray anchor hole in the turntable.

WARNING Crushing hazard. Failure to install the fastener into the engine tray anchor hole to secure the engine tray from moving could result in death or serious injury.

E-3
Perform Engine Maintenance - Deutz Models

Note: Engine specifications require that this procedure be performed every 12,000 hours.

Proper engine maintenance, following the engine manufacturer's maintenance schedule, is essential to good engine performance and service life. Failure to perform the maintenance procedures can lead to poor engine performance and component damage.

Required maintenance procedures and additional engine information are available in the *Deutz FL 2011 Operation Manual* (Deutz part number 0297-9929).

Deutz FL 2011 Operation Manual	
Genie part number	84794

To access the engine:

1 Remove the engine tray retaining fastener located under the engine tray. Swing the engine tray out and away from the machine.

2 Install the fastener that was just removed through the engine tray and into the engine tray anchor hole in the turntable.

WARNING Crushing hazard. Failure to install the fastener into the engine tray anchor hole to secure the engine tray from moving could result in death or serious injury.

E-4
Replace the Boom Extend/ Retract Cables

Note: Genie specifications require that this procedure be performed every 10 years.

The boom extend/retract cables are responsible for the extension and retraction of the number 3 boom tube. Replacement of the boom extend/retract cables is essential to good machine performance and safe machine operation. The boom extend/ retract functions should operate smoothly and be free of hesitation, jerking and unusual noise.

1 Replace the boom extend/retract cables. See Repair Procedure 4-5, *How to Adjust the Boom Extend/Retract Cables.*

This page intentionally left blank.

Repair Procedures

Observe and Obey:

- ☑ Repair procedures shall be completed by a person trained and qualified on the repair of this machine.
- ☑ Immediately tag and remove from service a damaged or malfunctioning machine.
- ☑ Repair any machine damage or malfunction before operating the machine.

Before Repairs Start:

- ☑ Read, understand and obey the safety rules and operating instructions in the appropriate Operator's Manual on your machine.
- ☑ Be sure that all necessary tools and parts are available and ready for use.
- ☑ Use only Genie approved replacement parts.
- ☑ Read each procedure completely and adhere to the instructions. Attempting shortcuts may produce hazardous conditions.
- ☑ Unless otherwise specified, perform each repair procedure with the machine in the following configuration:
  - Machine parked on a firm, level surface
  - Boom in stowed position
  - Turntable rotated with the boom between the non-steer wheels
  - Turntable secured with the turntable rotation lock
  - Key switch in the off position with the key removed
  - Wheels chocked
  - All external AC power disconnected from the machine

About This Section

Most of the procedures in this section should only be performed by a trained service professional in a suitably equipped workshop. Select the appropriate repair procedure after troubleshooting the problem.

Perform disassembly procedures to the point where repairs can be completed. To re-assemble, perform the disassembly steps in reverse order.

Symbols Legend

Safety alert symbol—used to alert personnel to potential personal injury hazards. Obey all safety messages that follow this symbol to avoid possible injury or death.

DANGER Indicates an imminently hazardous situation which, if not avoided, will result in death or serious injury.

WARNING Indicates a potentially hazardous situation which, if not avoided, could result in death or serious injury.

CAUTION Indicates the presence of a potentially hazardous situation which, if not avoided, may cause minor or moderate injury.

NOTICE Indicates a potentially hazardous situation which, if not avoided, may result in property damage.

⊙ Indicates that a specific result is expected after performing a series of steps.

⊠ Indicates that an incorrect result has occurred after performing a series of steps.

Platform Controls

The platform control box contains one printed circuit board. The ALC-500 circuit board inside the platform control box controls all proportional machine functions from the platform. The joystick controllers at the platform controls utilize Hall Effect technology and require no adjustment. The operating parameters of the joysticks are stored in memory at the ECM circuit board at the platform controls. If a joystick error occurs or if a joystick is replaced, it will need to be calibrated before that particular machine function will operate. See 1-2, *How to Calibrate a Joystick.*

Each joystick controller should operate smoothly and provide proportional speed control over its entire range of motion.

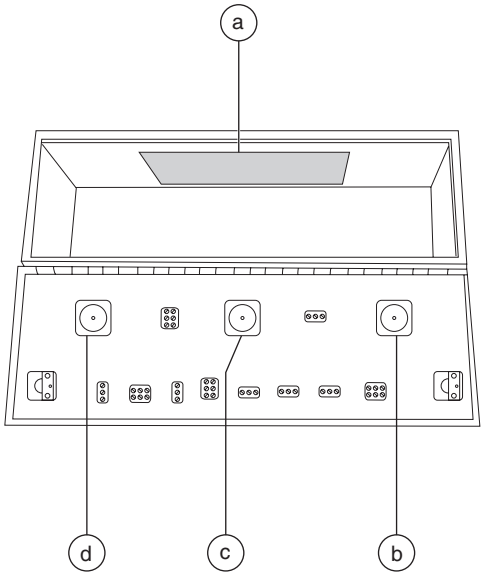

a ALC-500 circuit board
b drive/steer joystick controller
c boom extend/retract joystick controller
d primary boom up/down and turntable rotate left/right joystick controller

1-1 ALC-500 Circuit Board

WARNING Electrocution/burn hazard. Contact with electrically charged circuits could result in death or serious injury. Remove all rings, watches and other jewelry.

Note: When the ALC-500 circuit board is replaced, the joystick controllers will need to be calibrated. See 1-2, *How to Calibrate a Joystick.*

How to Remove the ALC-500 Circuit Board

1 Push in the red Emergency Stop button to the off position at both the ground and platform controls.

2 Remove the platform control box lid retaining fasteners. Open the control box lid.

3 Locate the ALC-500 circuit board mounted to the inside of the platform control box.

WARNING Electrocution/burn hazard. Contact with electrically charged circuits could result in death or serious injury. Remove all rings, watches and other jewelry.

4 Attach a grounded wrist strap to the ground screw inside the platform control box.

NOTICE Component damage hazard. Electrostatic discharge (ESD) can damage printed circuit board components. Maintain firm contact with a metal part of the machine that is grounded at all times when handling printed circuit boards OR use a grounded wrist strap.

5 Carefully disconnect the wire connectors from the circuit board.

6 Remove the ALC-500 circuit board mounting fasteners.

7 Carefully remove the ALC-500 circuit board from the platform control box.

1-2 Joysticks

How to Calibrate a Joystick

The joysticks on this machine utilize digital Hall Effect technology for proportional control. If a joystick is disconnected or replaced, it must be calibrated before that particular machine function will operate.

Note: The joystick must be calibrated before the threshold, max-out or ramping can be set.

Note: Perform this procedure with the engine off.

1 Open the platform control box.

2 Pull out the red Emergency Stop button to the on position at both the ground and platform controls.

3 Turn the key switch to platform control. Do not start the engine.

4 Select a joystick to calibrate.

5 Disconnect the wire harness connector from the joystick for approximately 10 seconds or until the alarm sounds. Connect the wire harness connector to the joystick.

6 Move the joystick full stroke in either direction and hold for 5 seconds.

7 Return the joystick to the neutral position, pause for a moment, then move the joystick full stroke in the opposite direction. Hold for 5 seconds and return the joystick to the neutral position.

⊙ Result: The alarm should sound indicating successful joystick calibration.

8 Repeat this procedure for each joystick controlled machine function including the thumb rocker steer switch.

Note: No machine function should operate while performing the joystick calibration procedure.

PLATFORM CONTROLS

How to Adjust the Joystick Threshold Setting

The threshold setting of a joystick is the minimum output at which a function proportional valve can open and allow the function to operate.

Note: Perform this procedure with the boom in the stowed position.

1 Pull out the red Emergency Stop button to the on position at both the ground and platform controls.

2 Turn the key switch to platform control. Do not start the engine.

3 Push in the platform controls red Emergency Stop button to the off position.

4 Do not press down the foot switch.

5 Move and hold the drive enable toggle switch in the right position and pull out the red Emergency Stop button to the on position.

6 When the alarm sounds, release the drive enable toggle switch.

7 Momentarily activate the drive enable toggle switch in the right direction 8 times.

⊙ Result: There should be a pause and the alarm should sound 8 times indicating that the machine is in threshold calibration mode.

8 Start the engine from the platform controls and press down the foot switch.

9 Select a boom function joystick to set the threshold.

10 Slowly move the joystick off center in either direction just until the function begins to move.

11 Slowly move the joystick back to the neutral position. Just before the function stops moving, move the drive enable toggle switch to either side to set the threshold.

⊙ Result: The alarm should sound indicating a successful calibration.

12 Repeat steps 9 through 11 for each boom joystick controlled machine function (boom up/down, boom extend/retract and turntable rotate).

13 Return the joystick to the neutral position and wait for approximately 10 seconds to allow the settings to be saved.

⊙ Result: The alarm should sound indicating that the settings have been saved in memory.

Note: Do not operate any machine function during the 10 second waiting time.

14 Cycle the red Emergency Stop button off, then back on.

How to Adjust the Joystick Max-out Setting

The max-out setting of a joystick controls the maximum speed of a joystick-controlled machine function. Whenever a hydraulic cylinder, drive motor or hydraulic pump is replaced, the max-out setting should be adjusted to maintain optimum performance. The max-out settings on the joystick can be changed to compensate for hydraulic pump wear to maintain peak performance from the machine.

Note: Perform this procedure with the boom in the stowed position.

1 Pull out the red Emergency Stop button to the on position at both the ground and platform controls.

2 Turn the key switch to platform control. Do not start the engine.

3 Push in the platform controls red Emergency Stop button to the off position.

4 Do not press down the foot switch.

5 Move and hold the drive enable toggle switch in the right position and pull out the red Emergency Stop button to the on position.

6 When the alarm sounds, release the drive enable toggle switch.

7 Momentarily activate the drive enable toggle switch in the right direction 4 times.

⊙ Result: There should be a pause and the alarm should sound 4 times indicating that the machine is in max-out calibration mode.

8 Start the engine from the platform controls and press down the foot switch.

9 Start a timer and activate the machine function that needs to be adjusted. Record the time it takes for that function to complete a full cycle (ie; boom up).

10 Compare the machine function time with the function times listed in Section 2, *Specifications.* Determine whether the function time needs to increase or decrease.

11 While the joystick is activated, adjust the max-out setting to achieve the proper function cycle time. Momentarily move the drive enable toggle switch in the right direction to increase the function speed or momentarily move the drive enable toggle switch in the left direction to decrease the function speed.

Note: Each time the drive enable toggle switch is momentarily moved, the function speed will change in 2% increments.

12 Repeat steps 9 through 11 for each joystick controlled machine function.

13 Return the joystick to the neutral position and wait for approximately 10 seconds to allow the settings to be saved.

⊙ Result: The alarm should sound indicating that the settings have been saved in memory.

Note: Do not operate any machine function during the 10 second waiting time.

14 Cycle the red Emergency Stop button off, then back on.

PLATFORM CONTROLS

How to Adjust the Joystick Ramp Rate Setting

The ramp rate setting of a joystick controls the time at which it takes for the joystick to reach maximum output, when moved out of the neutral position. The ramp rate settings of a joystick can be changed to compensate for hydraulic pump wear to maintain peak performance from the machine.

Note: Perform this procedure with the boom in the stowed position.

1 Pull out the red Emergency Stop button to the on position at both the ground and platform controls.

2 Turn the key switch to platform control. Do not start the engine.

3 Push in the platform controls red Emergency Stop button to the off position.

4 Do not press down the foot switch.

5 Move and hold the drive enable toggle switch in the right position and pull out the red Emergency Stop button to the on position.

6 When the alarm sounds, release the drive enable toggle switch.

7 Momentarily activate the drive enable toggle switch in the right direction 6 times.

⊙ Result: There should be a pause and the alarm should sound 6 times indicating that the machine is in ramp rate calibration mode.

⊠ Result: The alarm does not sound. Repeat steps 3 through 7.

8 Start the engine from the platform controls and press down the foot switch.

9 Start a timer and simultaneously move the joystick in either direction full stroke. Note how long it takes the function to reach maximum speed. This is the ramp rate.

10 Compare the function ramp rate time with the table and determine whether the ramp rate time needs to increase or decrease.

11 Release the foot switch.

12 Activate the joystick and adjust the ramp rate. Momentarily move the drive enable toggle switch in the right direction to increase the time or momentarily move the drive enable toggle switch in the left direction to decrease the time.

Note: Each time the drive enable toggle switch is momentarily moved, the time will change in 5% increments from a default of 100%, with a minimum of 50% and a maximum of 150%.

13 Repeat steps 9 through 11 for each joystick controlled machine function.

14 Return the joystick to the neutral position and wait for approximately 10 seconds to allow the settings to be saved.

⊙ Result: The alarm should sound indicating that the settings have been saved in memory.

⊠ Result: The alarm does not sound. The minimum or maximum adjustment has been obtained. No changes can be saved.

Note: Do not operate any machine function during the 10 second waiting time.

15 Cycle the red Emergency Stop button off, then back on.

PLATFORM CONTROLS

Ramp rate (factory settings)	
Boom up/down	
transition accelerate	1 second
transition decelerate	10 seconds
S ramp accelerate	1 second
S ramp decelerate	0.45 second
Boom extend/retract	
accelerate	2 seconds
decelerate	0.5 second
Turntable rotate	
accelerate	2 seconds
decelerate	0.75 second
Drive	
accelerate	2 seconds
decelerate to neutral	0.5 second
decelerate, change of direction	0.5 second
decelerate, coasting	0.75 second
decelerate, braking	1 second
decelerate, shift from low to high speed	1 second
decelerate, shift from high to low speed	4 seconds

Platform Components

2-1 Platform Leveling Slave Cylinder

The slave cylinder and the rotator pivot are the two primary supports for the platform. The slave cylinder keeps the platform level through the entire range of boom motion. It operates in a closed-circuit hydraulic loop with the master cylinder. The slave cylinder is equipped with counterbalance valves to prevent movement in the event of a hydraulic line failure.

How to Remove the Platform Leveling Slave Cylinder

Note: Before cylinder removal is considered, bleed the slave cylinder to be sure there is no air in the closed loop.

Note: When removing a hose assembly or fitting, the O-ring (if equipped) on the fitting and/or the hose end must be replaced. All connections must be torqued to specification during installation. Refer to Section 2, *Hydraulic Hose and Fitting Torque Specifications*.

1 Extend the boom until the slave cylinder barrel-end pivot pin is accessible.

2 Raise the boom slightly and place blocks under the platform for support.

3 Lower the boom until the platform is resting on the blocks just enough to support the platform.

Note: Do not rest the entire weight of the boom on the blocks.

4 Remove the pin retaining fastener from the slave cylinder rod-end pivot pin. Use a soft metal drift to drive the rod-end pivot pin out.

WARNING Crushing hazard. **S-65:** The jib boom could fall when the slave cylinder rod-end pivot pin is removed if not properly supported.

5 Remove the external snap rings from the barrel-end pivot pin.

6 Use a soft metal drift to drive the barrel-end pivot pin out.

7 Carefully pull the cylinder out of the boom to access the hydraulic hoses.

8 Tag, disconnect and plug the hydraulic hoses from the slave cylinder. Cap the fittings on the cylinder.

WARNING Bodily injury hazard. Spraying hydraulic oil can penetrate and burn skin. Loosen hydraulic connections very slowly to allow the oil pressure to dissipate gradually. Do not allow oil to squirt or spray.

How to Bleed the Slave Cylinder

Note: Do not start the engine. Use auxiliary power for this procedure.

1 Simultaneously activate the boom up function and the platform level up function until the boom is fully raised.

2 Simultaneously activate the boom down function and the platform level down function until the boom is fully lowered.

2-2 Platform Rotator

The platform rotator is a hydraulically activated helical gear assembly used to rotate the platform 160 degrees.

How to Remove the Platform Rotator

NOTICE Component damage hazard. Mark the platform mounting weldment and the rotator flange before removing the platform mounting weldment. The platform mounting weldment must be replaced in the exact same position on the rotator flange as it was before removal. If a new rotator is installed or the rotator is disassembled, proper alignment can be achieved by rotating the rotator all the way to the left and then installing the platform mounting weldment all the way in the left position.

Note: When removing a hose assembly or fitting, the O-ring (if equipped) on the fitting and/or the hose end must be replaced. All connections must be torqued to specification during installation. Refer to
Section 2, *Hydraulic Hose and Fitting Torque Specifications*.

1 Remove the platform and platform support.

Note: S-60 HC: If the load sense components are disassembled and/or removed from the platform support, the platform load sense system will need to be calibrated. See 2-4, *How to Calibrate the Platform Load Sense System, S-60 HC.*

2 **S-60 HC:** Tag and disconnect the electrical connector from the platform load sense module.

3 Tag, disconnect and plug the hydraulic hoses from the platform rotator manifold. Cap the fittings on the rotator.

⚠WARNING Bodily injury hazard. Spraying hydraulic oil can penetrate and burn skin. Loosen hydraulic connections very slowly to allow the oil pressure to dissipate gradually. Do not allow oil to squirt or spray.

4 **S-65:** Support the jib boom leveling arms and the platform mounting weldment with an appropriate lifting device. Do not apply any lifting pressure.

5 Remove the mounting bolts from the platform mounting weldment. Remove the center bolt and slide the platform mounting weldment off of the platform rotator.

⚠WARNING Crushing hazard. The platform mounting weldment could become unbalanced and fall if not properly supported when removed from the machine.

6 Support the platform rotator with an appropriate lifting device. Do not apply any lifting pressure.

S-60:

7 Support the rod end of the platform leveling slave cylinder. Protect the cylinder rod from damage.

PLATFORM COMPONENTS

8 Remove the pivot pin retaining fasteners from both the slave cylinder rod-end pivot pin and the rotator pivot pin.

9 Use a soft metal drift to remove both pivot pins. Remove the platform rotator from the machine.

⚠CAUTION Crushing hazard. The platform rotator may become unbalanced and fall if not properly supported.

Note: When installing the platform rotator fasteners, torque the fasteners to specifications.

S-65:

7 Remove the pin retaining fasteners from the jib boom and jib boom leveling arms to platform rotator pivot pins. Do not remove the pins.

8 Support the jib boom leveling arms.

9 Use a soft metal drift to drive both pins out, then remove the platform rotator from the machine.

⚠CAUTION Bodily injury hazard. The jib boom leveling arms may fall if not properly supported.

10 Lower the jib boom leveling arms.

⚠CAUTION Crushing hazard. The platform rotator may become unbalanced and fall if not properly supported.

Note: When installing the platform rotator fasteners, torque the fasteners to specifications.

How to Bleed the Platform Rotator

Note: This procedure will require two people. Do not start the engine. Use auxiliary power for this procedure.

1 Move the function enable toggle switch to either side and activate the platform rotate toggle switch to the right then the left through two platform rotation cycles, then hold the switch to the right position until the platform is fully rotated to the right.

Before serial number 9154:

2 Connect a clear hose to the top bleed valve. Place the other end of the hose in a container to collect any drainage. Secure the container to the boom.

3 Open the top bleed valve on the rotator, but do not remove it.

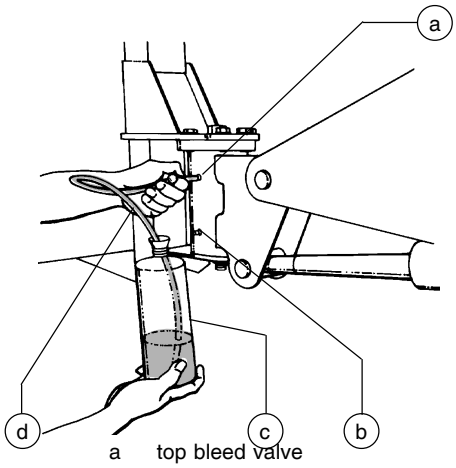

a top bleed valve
b bottom bleed valve
c container
d clear hose

4 Move the function enable toggle switch to either side and hold the platform rotate toggle switch to the left position until the platform is fully rotated to the left. Continue holding the toggle switch until air stops coming out of the bleed valve. Close the bleed valve.

WARNING Crushing hazard. Keep clear of the platform during rotation.

5 Connect the clear hose to the bottom bleed valve and open the valve. Do not remove the bleed valve.

6 Move the function enable toggle switch to either side and hold the platform rotate toggle switch to the right position until the platform is fully rotated to the right. Continue holding the toggle switch until air stops coming out of the bleed valve. Close the bleed valve.

WARNING Crushing hazard. Keep clear of the platform during rotation.

7 Remove the hose from the bleed valve and clean up any hydraulic oil that may have spilled.

8 Rotate the platform fully in both directions and inspect the bleed valves for leaks.

After serial number 9153:

2 Place a suitable container underneath the platform rotator.

3 Open the top bleed screw on the rotator, but do not remove it.

WARNING Bodily injury hazard. Spraying hydraulic oil can penetrate and burn skin. Loosen hydraulic connections very slowly to allow the oil pressure to dissipate gradually. Do not allow oil to squirt or spray.

4 Move the function enable toggle switch to either side and hold the platform rotate toggle switch to the left position until the platform is fully rotated to the left. Continue holding the toggle switch until air stops coming out of the bleed screw. Close the bleed screw.

WARNING Crushing hazard. Keep clear of the platform during rotation.

5 Open the bottom bleed screw on the rotator, but do not remove it.

WARNING Bodily injury hazard. Spraying hydraulic oil can penetrate and burn skin. Loosen hydraulic connections very slowly to allow the oil pressure to dissipate gradually. Do not allow oil to squirt or spray.

6 Move the function enable toggle switch to either side and hold the platform rotate toggle switch to the right position until the platform is fully rotated to the right. Continue holding the toggle switch until air stops coming out of the bleed screw. Close the bleed screw.

WARNING Crushing hazard. Keep clear of the platform during rotation.

7 Clean up any hydraulic oil that may have spilled.

8 Rotate the platform fully in both directions and inspect the bleed screws for leaks.

PLATFORM COMPONENTS

2-3 Platform Overload System, S-60 and S-65 (if equipped)

How to Calibrate the Platform Overload System

Calibration of the platform overload system is essential to safe machine operation. Continued use of an improperly calibrated platform overload system could result in the system failing to sense an overloaded platform. The stability of the machine is compromised and it could tip over.

Note: For S-60 HC models, refer to Repair Procedure *2-4, Platform Load Sense System, S-60 HC.*

Note: Perform this procedure with the machine on a firm, level surface.

1 Turn the key switch to platform control. Start the engine and level the platform.

2 Determine the maximum platform capacity. Refer to the machine serial plate.

3 Remove all weight, tools and accessories from the platform.

Note: Failure to remove all weight, tools and accessories from the platform will result in an incorrect calibration.

4 Using a suitable lifting device, place a test weight equal to the maximum platform capacity at the center of the platform floor.

5 Move the platform up and down by hand, so it bounces approximately 2.5 to 5 cm / 1 to 2 inches. Allow the platform to settle.

Result: The overload indicator lights are off and the alarm does not sound. Proceed to step 6.

Result: The overload indicator lights are flashing at the platform and ground controls, and the alarm is sounding. Slowly tighten the load spring adjustment nut in a clockwise direction in 10° increments until the overload indicator light turns off, and the alarm does not sound. Proceed to step 8.

Note: The platform will need to be moved up and down and allowed to settle between each adjustment.

Note: There may be a 2 second delay before the platform overload indicator light and alarm responds.

6 Move the platform up and down by hand, so it bounces approximately 2.5 to 5 cm / 1 to 2 inches. Allow the platform to settle.

Result: The overload indicator lights are off at the platform and ground controls, and the alarm does not sound. Slowly loosen the load spring adjustment nut in a counterclockwise direction in 10° increments until the overload indicator light flashes at both the platform and ground controls, and the alarm sounds. Proceed to step 7.

Result: The overload indicator lights are flashing at the platform and ground controls, and the alarm is sounding. Repeat this procedure beginning with step 5.

Note: The platform will need to be moved up and down and allowed to settle between each adjustment.

Note: There may be a 2 second delay before the platform overload indicator lights and alarm responds.

7 Move the platform up and down by hand, so it bounces approximately 2.5 to 5 cm / 1 to 2 inches. Allow the platform to settle.

⊙ Result: The overload indicator lights are off and the alarm does not sound. Proceed to step 8.

⊠ Result: The overload indicator lights are flashing at the platform and ground controls, and the alarm is sounding. Repeat this procedure beginning with step 5.

Note: There may be a 2 second delay before the platform overload indicator light and alarm responds.

8 Add an additional 10 lb / 4.5 kg test weight to the platform.

⊙ Result: The overload indicator light is flashing at both the ground and platform controls, and the alarm is sounding. Proceed to step 9.

⊠ Result: The overload indicator light is off at both the ground and platform controls, and the alarm does not sound. Remove the additional 10 lb / 4.5 kg test weight. Repeat this procedure beginning with step 6.

Note: There may be a 2 second delay before the platform overload indicator light and alarm responds.

9 Test all machine functions from the platform controls.

⊙ Result: All platform control functions should not operate.

10 Turn the key switch to ground control.

11 Test all machine functions from the ground controls.

⊙ Result: All ground control functions should not operate.

12 Using a suitable lifting device, lift the test weight off the platform floor.

⊙ Result: The platform overload indicator light should be off at both the ground and platform controls and the alarm should not sound.

Note: There may be a 2 second delay before the overload indicator lights and alarm turn off.

13 Test all machine functions from the ground controls.

⊙ Result: All ground control functions should operate normally.

14 Turn the key switch to platform control.

15 Test all machine functions from the platform controls.

⊙ Result: All platform control functions should operate normally.

PLATFORM COMPONENTS

2-4 Platform Load Sense System, S-60 HC

How to Calibrate the Platform Load Sense System

Proper calibration of the load sense system is essential to safe machine operation. Continued use of an improperly calibrated load sense system could result in the system failing to sense an overloaded platform. The stability of the machine is compromised and it could tip over.

Note: For S-60 and S-65 models, refer to Repair Procedure *2-3, Platform Overload System, S-60 and S-65 (if equipped).*

Note: Perform this procedure with the boom fully retracted and in the stowed position and with the machine on a firm, level surface.

Note: The platform overload system will not allow partial calibration and must be completed in its entirety.

1 At the ground controls, turn the key switch to the off position and push in the red Emergency Stop button to the off position. Pull out the red Emergency Stop button to the on postion at the platform controls.

2 Remove all weight, tools and equipment from the platform.

⚠ DANGER Tip-over hazard. Failure to remove all weight, options, accessories and/or tools from the platform or subtracting the weight of those items from the test weights, will result in the platform load sense system not calibrating correctly. This will allow too much weight to be added to the platform which will result in the machine tipping over.

3 Open the ground control box and locate the calibration toggle switch near the relays.

Note: If either the operational and/or safety controller has been replaced or if the software has been updated, restore the system to the default settings and then continue to step 4. See *How to Restore the Default Settings.* Otherwise, continue to step 4 to enter calibration mode.

4 Turn the key switch to ground control and pull out the red Emergency Stop button to the on position.

⊙ Result: The alarm sound for approximately 2 seconds.

How to Restore the System Default Settings

1 Turn the key switch to ground control and pull out the red Emergency Stop button to the on position.

⊙ Result: The alarm should sound a long tone.

2 Activate and hold the calibration toggle switch for 5 seconds.

⊙ Result: The alarm should sound a tone for 1 second.

3 Push in the red Emergency Stop button to the off position.

PLATFORM COMPONENTS

5 Activate and release the calibration toggle switch 3 times within 2 seconds after the alarm sounds to enter calibration mode.

Result: The alarm should sound for 1 second indicating the first calibration step was accepted. The green LED on the operational controller should be blinking fast and the red LED should be blinking twice indicating that step 2 of calibration is next.

Result: The alarm did not sound and the green LED on the operational controller is not blinking fast. Repeat this procedure beginning with step 1.

Note: Once calibration mode is entered and begun, there is a 8 minute time limit between each calibration step. If any one step passes the 8 minute time limit, the system will time out and the calibration process will need to be repeated beginning with step 1.

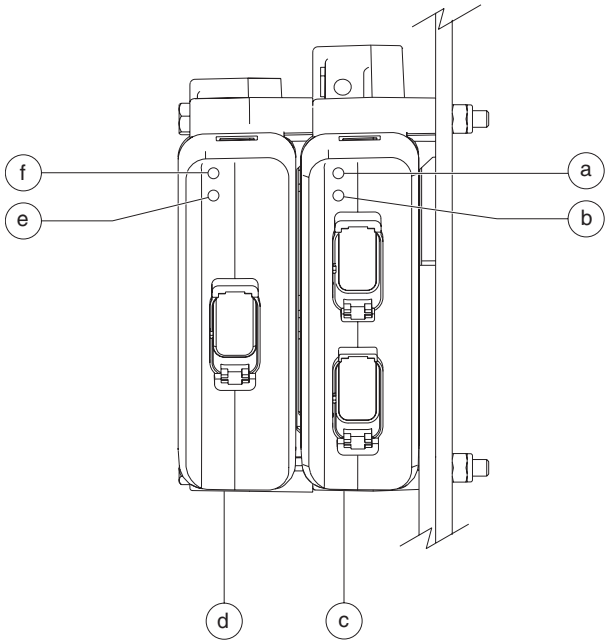

a green LED (operational control module)
b red LED (operational control module)
c operational control module
d safety control module
e red LED (safety control module)
f green LED (safety control module)

6 Start the engine from the ground controls.

Operational Control Module LED Status	
Description	Definition
Green and red LEDs **not** flashing	System is calibrated
Green LED flashing rapidly	System is in calibration mode
Red LED flashing with pauses	Indicates next calibration step (ie; 2, 3, etc

Safety Control Module LED Status	
Description	Definition
Green and red LEDs **not** flashing	System is calibrated
Green and red LEDs flashing alternately	System is not calibrated

PLATFORM COMPONENTS

7 Raise the boom until the distance, when measured between the centers of the pivot pins shown, equals 108.75 inches / 276 cm ± 0.75 inch / 19 mm.

WARNING Crushing hazard. Keep clear of all moving parts of the boom while the boom is raising. Do not attempt to measure between the pivot pins while the boom is moving.

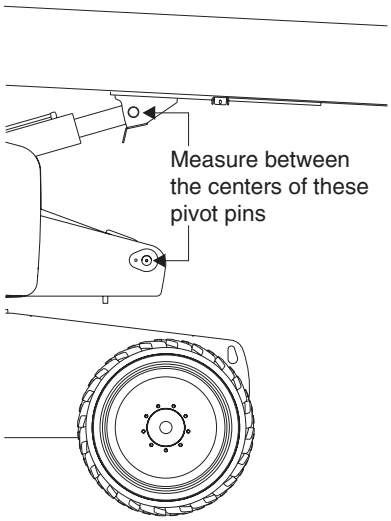

8 Activate the calibration toggle switch inside the ground control box 1 time.

⊙ Result: The alarm should sound for 1 second indicating the second calibration step was accepted. The green LED on the operational controller should be blinking fast and the red LED should be blinking three times indicating that step 3 of calibration is next.

9 Raise the boom until the distance, when measured between the centers of the pivot pins shown, equals 167.25 inches / 424.8 cm ± 0.75 inch / 19 mm.

WARNING Crushing hazard. Keep clear of all moving parts of the boom while the boom is raising. Do not attempt to measure between the pivot pins while the boom is moving.

10 Activate and release the calibration toggle switch inside the ground control box 1 time.

⊙ Result: The alarm should sound for 1 second indicating the third calibration step was accepted. The green LED on the operational controller should be blinking fast and the red LED should be blinking four times indicating that step 4 of calibration is next.

11 Fully raise and extend the boom.

12 Activate and release the calibration toggle switch inside the ground control box 1 time.

⊙ Result: The alarm should sound for 1 second indicating the fourth calibration step was accepted. The green LED on the operational controller should be blinking fast and the red LED should be blinking five times indicating that step 5 of calibration is next.

13 Fully retract and lower the boom to the stowed position.

14 Using a suitable lifting device, place an appropriate test weight equal to 750 lbs / 340.2 kg on to the center of the platform floor.

Note: If your machine is equipped with any platform accessories or options, they must be removed from the platform OR the weights of those options or accessories must be subtracted from the test weights to accurately calibrate the platform load sense system.

15 Activate and release the calibration toggle switch inside the ground control box 1 time.

⊙ Result: The alarm should sound for 1 second indicating the fifth calibration step was accepted. The green LED on the operational controller should be blinking fast and the red LED should be blinking six times indicating that step 6 of calibration is next.

16 Using a suitable lifting device, place an additional test weight equal to 510 lbs / 231.3 kg on to the center of the platform floor. The total weight in the platform must equal 1260 lbs / 571.5 kg.

17 Activate and release the calibration toggle switch inside the ground control box 1 time.

⊙ Result: The alarm should sound for 1 second indicating the sixth calibration step was accepted. The engine may turn off and the alarm may sound indicating an overloaded platform.

18 At the ground controls, push in the red Emergency Stop button to the off position, then pull out the red Emergency Stop button to the on position to reset the system.

19 Visually inspect the LEDs on the controllers.

⊙ Result: All LEDs on both controllers should be off indicating the platform load sense system is calibrated.

20 Using a suitable lifting device, remove the test weights from the platform.

21 Pull out the red Emergency Stop button to the on position at the ground controls and visually inspect the LEDs on the operational and safety controllers.

⊙ Result: Both the green and red LEDs on both controllers should be off indicating the system is calibrated.

Note: If an LED is blinking on either controller, the load sense system is not calibrated correctly or a fault may exist. Refer to Section 5, *Fault Codes* to determine the system fault.

Jib Boom Components, S-65

3-1
Jib Boom

How to Remove the Jib Boom

Note: Perform this procedure with the boom in the stowed position.

Note: When removing a hose assembly or fitting, the O-ring (if equipped) on the fitting and/or the hose end must be replaced. All connections must be torqued to specification during installation. Refer to Section 2, *Hydraulic Hose and Fitting Torque Specifications*.

1 Remove the platform.

2 Remove the platform mounting weldment.

3 Remove the hose and cable cover from the side of the jib boom.

4 Remove the hose and cable clamp from the jib boom pivot pin. Lay all hoses and cables to the side.

NOTICE Component damage hazard. Hoses and cables can become damaged if they are kinked or pinched.

5 Tag, disconnect and plug the jib boom lift cylinder hydraulic hoses. Cap the fittings on the cylinder.

⚠WARNING Bodily injury hazard. Spraying hydraulic oil can penetrate and burn skin. Loosen hydraulic connections very slowly to allow the oil pressure to dissipate gradually. Do not allow oil to squirt or spray.

6 Attach a lifting strap from an overhead crane to the jib boom assembly.

7 Place blocks under the platform leveling cylinder for support. Protect the cylinder rod from damage.

8 Remove the pin retaining fastener from the slave cylinder rod-end pivot pin. Use a soft metal drift to remove the pin.

⚠WARNING Crushing hazard. The jib boom could fall when the slave cylinder rod-end pivot pin is removed if not properly attached to the overhead crane.

9 Remove the pin retaining fastener from the jib boom bellcrank to primary boom pivot pin.

10 Use a soft metal drift to remove the pin and carefully remove the jib boom assembly from the primary boom.

⚠WARNING Crushing hazard. The jib boom could become unbalanced and fall when removed from the machine if not properly attached to the overhead crane.

3-2
Jib Boom Lift Cylinder

How to Remove the Jib Boom Lift Cylinder

Note: Perform this procedure with the boom in the stowed position.

Note: When removing a hose assembly or fitting, the O-ring (if equipped) on the fitting and/or the hose end must be replaced. All connections must be torqued to specification during installation. Refer to Section 2, *Hydraulic Hose and Fitting Torque Specifications*.

1 Raise the jib boom slightly and place blocks under the platform mounting weldment. Then lower the jib boom until the platform is resting on the blocks just enough to support the platform.

Note: Do not rest the entire weight of the boom on the blocks.

2 Tag, disconnect and plug the jib boom lift cylinder hydraulic hoses. Cap the fittings on the cylinder.

WARNING Bodily injury hazard. Spraying hydraulic oil can penetrate and burn skin. Loosen hydraulic connections very slowly to allow the oil pressure to dissipate gradually. Do not allow oil to squirt or spray.

3 Remove the pin retaining fasteners from the jib boom lift cylinder rod-end pivot pin. Do not remove the pin.

4 Use a soft metal drift to tap the jib boom lift cylinder rod-end pivot pin half way out. Then lower one of the leveling arms to the ground. Tap the pin the other direction and lower the opposite leveling arm. Do not remove the pin.

5 Support the jib boom lift cylinder with a lifting device.

6 Remove the pin retaining fastener from the jib boom lift cylinder barrel-end pivot pin. Use a soft metal drift to remove the barrel-end pin and let the cylinder hang down.

WARNING Crushing hazard. The platform and jib boom could become unbalanced and fall when the jib boom barrel-end pivot pin is removed if not properly supported.

7 Attach a lifting strap from an overhead crane to the lug on the rod end of the jib boom lift cylinder.

8 Use a soft metal drift to remove the jib boom lift cylinder rod-end pin. Remove the cylinder from the machine.

WARNING Crushing hazard. The jib boom lift cylinder could become unbalanced and fall when removed from the machine if not properly attached to the overhead crane.

Boom Components

4-1
Cable Track

The primary boom cable track guides the cables and hoses running up the boom. It can be repaired link by link without removing the cables and hoses that run through it. Removing the entire primary boom cable track is only necessary when performing major repairs that involve removing the primary boom.

How to Remove the Cable Track, S-60

Note: When removing a hose assembly or fitting, the O-ring (if equipped) on the fitting and/or the hose end must be replaced. All connections must be torqued to specification during installation. Refer to Section 2, *Hydraulic Hose and Fitting Torque Specifications*.

1 Raise the boom to a horizontal position.

2 Locate the cables from the boom cable track to the platform control box. Number each cable and its entry location at the platform control box.

3 Disconnect the cables from the platform control box.

4 Remove the electrical outlet box bracket mounting fasteners. Remove the outlet box and lay it to the side.

5 Remove the hose and cable clamp from the platform support.

6 Tag, disconnect and plug the hydraulic hoses from the counterbalance valve manifold located on the platform rotator. Cap the fittings on the manifold.

⚠WARNING Bodily injury hazard. Spraying hydraulic oil can penetrate and burn skin. Loosen hydraulic connections very slowly to allow the oil pressure to dissipate gradually. Do not allow oil to squirt or spray.

7 Tag, disconnect and plug the platform leveling slave cylinder hydraulic hoses from the bulkhead fittings on the side of the primary boom. Cap the bulkhead fittings.

⚠WARNING Bodily injury hazard. Spraying hydraulic oil can penetrate and burn skin. Loosen hydraulic connections very slowly to allow the oil pressure to dissipate gradually. Do not allow oil to squirt or spray.

8 Locate all electrical cables under the boom at the pivot end that enter the cable track.

9 Tag and disconnect the electrical connectors for all cables that enter the cable track.

10 Remove the retaining fasteners from the electrical connector receptacles for the cables that enter the cable track.

11 Carefully pull the cables and connector receptacles out of the primary boom.

12 Tag, disconnect and plug all hydraulic hoses that enter the cable track from the bulkhead fittings at the pivot end of the boom.

⚠WARNING Bodily injury hazard. Spraying hydraulic oil can penetrate and burn skin. Loosen hydraulic connections very slowly to allow the oil pressure to dissipate gradually. Do not allow oil to squirt or spray.

13 Pull the hydraulic hoses out of the primary boom.

14 Place blocks in between the upper and lower cable tracks and secure the upper and lower tracks together.

⚠WARNING Crushing hazard. If the upper and lower cable tracks are not properly secured together, the cable track could become unbalanced and fall when removed from the machine.

15 Attach a strap from an overhead crane to the cable track.

16 Remove the cotter pin from the cable track pull tube at the platform end of the boom.

Note: Always replace the cotter pin with a new one.

17 Remove the cable track pull tube guide fasteners from the cable track guide at the platform end of the boom. Remove the cable track guide from the boom.

18 Remove the cable track mounting fasteners that attach the lower cable track to the primary boom.

19 Carefully remove the cable track from the machine and place it on a structure capable of supporting it.

⚠WARNING Crushing hazard. The cable track could become unbalanced and fall if not properly attached to the overhead crane.

NOTICE Component damage hazard. Cables and hoses can be damaged if they are kinked or pinched.

NOTICE Component damage hazard. The cable track can be damaged if it is twisted.

BOOM COMPONENTS

How to Remove the Cable Track, S-65

Note: When removing a hose assembly or fitting, the O-ring (if equipped) on the fitting and/or the hose end must be replaced. All connections must be torqued to specification during installation. Refer to Section 2, *Hydraulic Hose and Fitting Torque Specifications*.

1 Open the platform control box.

2 Tag and disconnect the foot switch wiring from the terminal strip inside the platform control box. Pull the wiring out of the platform control box.

3 Raise the boom to a horizontal position.

4 Disconnect the wire connectors from the bottom of the platform control box.

Note: When installing the wire connectors to the bottom of the platform control box, match the color of the connectors to those on the control box to be sure they are installed in the correct location.

5 Remove the mounting fasteners from the power to platform outlet box bracket. Lay the outlet box and bracket assembly off to the side.

6 Remove the hose and cable clamps from the platform support and jib boom.

7 Tag, disconnect and plug the platform leveling slave cylinder hydraulic hoses from the bulkhead fittings on the side of the primary boom. Cap the bulkhead fittings.

⚠WARNING Bodily injury hazard. Spraying hydraulic oil can penetrate and burn skin. Loosen hydraulic connections very slowly to allow the oil pressure to dissipate gradually. Do not allow oil to squirt or spray.

8 Tag, disconnect and plug the hydraulic hoses from the "V1" and "V2" ports of the jib boom/ platform rotate manifold. Cap the fittings on the manifold.

⚠WARNING Bodily injury hazard. Spraying hydraulic oil can penetrate and burn skin. Loosen hydraulic connections very slowly to allow the oil pressure to dissipate gradually. Do not allow oil to squirt or spray.

9 Remove the hose and cable cover from the side of the jib boom.

10 Locate all electrical cables under the boom at the pivot end that enter the cable track.

11 Tag and disconnect the electrical connectors for all cables that enter the cable track.

12 Remove the retaining fasteners from the electrical connector receptacles for the cables that enter the cable track.

13 Carefully pull the cables and connector receptacles out of the primary boom.

14 Tag, disconnect and plug all hydraulic hoses that enter the cable track from the bulkhead fittings at the pivot end of the boom.

⚠WARNING Bodily injury hazard. Spraying hydraulic oil can penetrate and burn skin. Loosen hydraulic connections very slowly to allow the oil pressure to dissipate gradually. Do not allow oil to squirt or spray.

15 Pull the hydraulic hoses out of the primary boom.

16 Remove the cotter pin from the upper cable track at the platform end of the boom.

Note: Always replace the cotter pin with a new one.

17 Remove the cable track pull tube guide fasteners from the cable track guide at the platform end of the boom. Remove the cable track guide from the boom.

18 Place blocks in between the upper and lower cable tracks and secure the upper and lower tracks together.

⚠WARNING Crushing hazard. If the upper and lower cable tracks are not properly secured together, the cable track could become unbalanced and fall when removed from the machine.

19 Attach a lifting strap from an overhead crane to the cable track.

20 Remove the mounting fasteners that attach the lower cable track to the boom.

21 Carefully remove the cable track from the machine and place it on a structure capable of supporting it.

⚠WARNING Crushing hazard. The cable track could become unbalanced and fall if not properly attached to the overhead crane.

NOTICE Component damage hazard. Cables and hoses can be damaged if they are kinked or pinched.

NOTICE Component damage hazard. The cable track can be damaged if it is twisted.

BOOM COMPONENTS

How to Repair the Cable Track

NOTICE Component damage hazard. The boom cable track can be damaged if it is twisted.

Note: A cable track repair kit is available through the Genie Parts Department, part no. 77896. The kit includes a 4 link section of cable track.

1 Visually inspect the cable track and determine which 4 link section needs to be replaced.

2 Carefully remove the snap rings from each end of the damaged section of cable track.

3 Remove the retaining fasteners from the upper black rollers from the 4 link section of cable track to be replaced. Remove the rollers.

4 Lift up the hoses and cables and carefully remove the damaged 4 link section of cable track.

NOTICE Component damage hazard. Hoses and cables can be damaged if they are kinked or pinched.

5 Remove the upper rollers from the replacement section of cable track.

6 Lift up the hoses and cables and carefully insert the new 4 link section of cable track.

NOTICE Component damage hazard. Hoses and cables can be damaged if they are kinked or pinched.

7 Connect the ends of the replacement cable track section to the existing cable track using the snap rings.

8 Install the rollers onto the new section of cable track.

9 Operate the boom extend/retract function through a full cycle to ensure smooth operation of the new section of cable track.

BOOM COMPONENTS

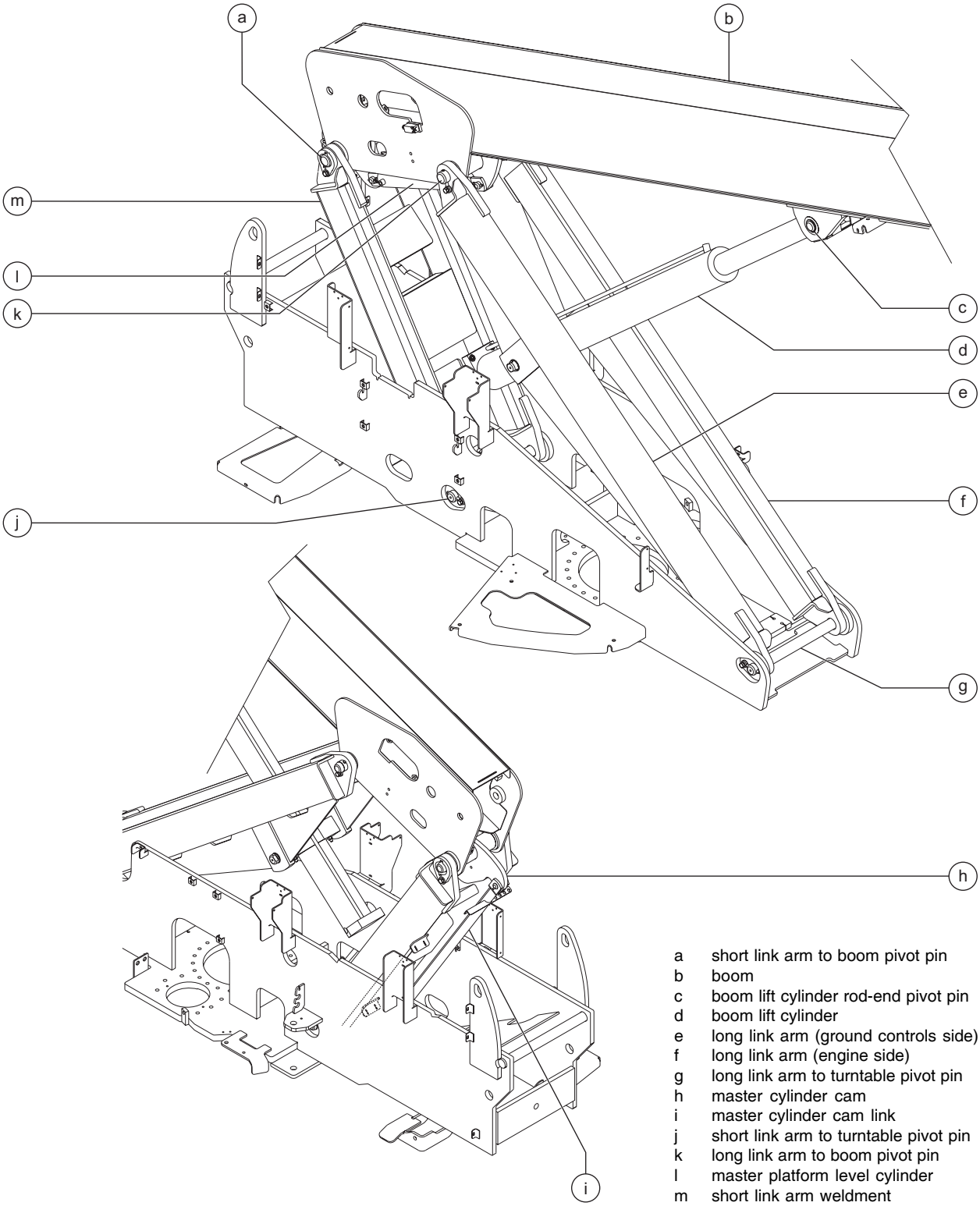

a short link arm to boom pivot pin
b boom
c boom lift cylinder rod-end pivot pin
d boom lift cylinder
e long link arm (ground controls side)
f long link arm (engine side)
g long link arm to turntable pivot pin
h master cylinder cam
i master cylinder cam link
j short link arm to turntable pivot pin
k long link arm to boom pivot pin
l master platform level cylinder
m short link arm weldment

BOOM COMPONENTS

4-2 Boom

How to Remove the Boom

WARNING Bodily injury hazard. This procedure requires specific repair skills, lifting equipment and a suitable workshop. Attempting this procedure without these skills and tools could result in death or serious injury and significant component damage. Dealer service is strongly recommended.

Note: When removing a hose assembly or fitting, the O-ring (if equipped) on the fitting and/or the hose end must be replaced. All connections must be torqued to specification during installation. Refer to Section 2, *Hydraulic Hose and Fitting Torque Specifications*.

1 Remove the jib boom. See 3-1, *How to Remove the Jib Boom.*

2 Remove the cable track. See 4-1, *How to Remove the Cable Track.*

3 Raise the boom until the short and long link arm to boom pivot pins are above the turntable covers.

4 Place a block of wood measuring 4 x 4 x 60 inches / 10 x 10 x 152 cm under the long link arm, across the turntable covers.

5 Slowly lower the boom until the long link arm contacts the wood block. Do not rest the entire weight of the boom on the block. Turn the machine off.

NOTICE Component damage hazard. The turntable covers can become damaged if the weight of the boom is allowed to rest on the block.

6 Place wood blocks between the short link arm and the turntable weldment for support.

7 Attach lifting straps from a 5 ton / 5000 kg overhead crane to each end of the boom. Support the boom. Do not apply any lifting pressure.

8 Support and secure the rod end of the boom lift cylinder to a second overhead crane or similar lifting device.

9 Remove the lift cylinder rod-end pivot pin retaining fasteners. Use a soft metal drift to remove the pin.

WARNING The boom could fall if not properly supported when the lift cylinder rod-end pivot pin is removed.

10 Using auxiliary power, activate the boom down function so the cylinder will retract. Retract the cylinder just enough until the rod end of the cylinder will clear the mounting bracket on the boom. Turn the machine off.

WARNING Crushing hazard. The boom lift cylinder could fall if not properly supported and secured to the lifting device.

11 Using the overhead crane, carefully lower the boom lift cylinder and allow it to rest on the boom rest pad. Protect the cylinder rod from damage.

12 **S-60 and S-65:** Remove the boom end cover retaining fasteners and remove the cover.

S-60 HC: Remove the boom end cover from the pivot end of the boom while guiding the small cable from the string potentiometer out of the slot of the cover. Rest the cover and string potentiometer on the counterweight.

NOTICE Component damage hazard. The cable from the string potentiometer can become damaged if it is kinked or pinched.

13 **S-60 HC:** Remove the string potentiometer cable break limit switch mounting fasteners.

14 **S-60 HC:** Remove the pulley retaining plate from the string potentiometer pulley bracket. Carefully remove the string potentiometer cable and limit switch assembly from the boom.

15 Tag, disconnect and plug the boom extension cylinder hydraulic hoses. Cap the fittings on the cylinder.

⚠WARNING Bodily injury hazard. Spraying hydraulic oil can penetrate and burn skin. Loosen hydraulic connections very slowly to allow the oil pressure to dissipate gradually. Do not allow oil to squirt or spray.

16 Tag and disconnect the electrical connector for the cable break limit switch.

17 Tag and disconnect all boom wire harness electrical connectors located at the pivot end of the boom.

18 Support the platform leveling master cylinder. Remove the master cylinder rod-end pivot pin retaining fasteners. Place a rod through the pin and twist to remove. Carefully lower the master cylinder down.

19 Tag, disconnect and plug the hydraulic hoses from the bulkhead fittings at the pivot end of the boom. Cap the bulkhead fittings.

⚠WARNING Bodily injury hazard. Spraying hydraulic oil can penetrate and burn skin. Loosen hydraulic connections very slowly to allow the oil pressure to dissipate gradually. Do not allow oil to squirt or spray.

20 Remove the external snap rings from both boom pivot pins at the short and long link arms. Do not remove the pins.

21 Using the overhead crane, adjust the boom as necessary to relieve pressure from the pivot pins.

22 Use a soft metal drift to remove each boom pivot pin. Carefully remove the boom assembly from the machine and place it on a structure capable of supporting it.

⚠WARNING Crushing hazard. The boom could fall if not properly supported by the overhead crane when each boom pivot pin is removed.

⚠CAUTION Crushing hazard. The long and short link arms may fall if not properly supported when the boom pivot pins are removed.

BOOM COMPONENTS

4-3 Boom Lift Cylinder

The boom lift cylinder raises and lowers the boom. The boom lift cylinder is equipped with counterbalance valves to prevent movement in the event of a hydraulic line failure.

How to Remove the Boom Lift Cylinder

WARNING Bodily injury hazard. This procedure requires specific repair skills, lifting equipment and a suitable workshop. Attempting this procedure without these skills and tools could result in death or serious injury and significant component damage. Dealer service is strongly recommended.

Note: When removing a hose assembly or fitting, the O-ring (if equipped) on the fitting and/or the hose end must be replaced. All connections must be torqued to specification during installation. Refer to Section 2, *Hydraulic Hose and Fitting Torque Specifications*.

1 Raise the boom to a horizontal position.

2 Attach a 5 ton / 5000 kg overhead crane to the boom at the platform end for support. Do not lift the boom.

3 Support and secure both ends of the boom lift cylinder to a second overhead crane or similar lifting device.

4 Remove the pin retaining fastener from the boom lift cylinder rod-end pivot pin. Use a soft metal drift to remove the pin.

WARNING Crushing hazard. The boom will fall if not properly supported when the primary boom rod-end pivot pin is removed.

5 Using auxiliary power, activate the boom down function so the cylinder will retract. Retract the cylinder just enough until the rod end of the cylinder will clear the mounting bracket on the boom. Turn the machine off.

6 Tag, disconnect and plug the boom lift cylinder hydraulic hoses. Cap the fittings on the cylinder.

WARNING Bodily injury hazard. Spraying hydraulic oil can penetrate and burn skin. Loosen hydraulic connections very slowly to allow the oil pressure to dissipate gradually. Do not allow oil to squirt or spray.

7 Remove the pin retaining fasteners from the boom lift cylinder barrel-end pivot pins. Do not remove the pins.

8 Use a slide hammer to remove the barrel-end pivot pins.

WARNING Crushing hazard. The boom lift cylinder could become unbalanced and fall if not properly supported and secured to the lifting device.

9 Move the boom lift cylinder towards the counterweight end of the machine. Rotate the boom lift cylinder until the barrel-end pivot pin bores will clear the boom linkage.

10 Carefully remove the boom lift cylinder from the machine.

WARNING Crushing hazard. The boom lift cylinder could become unbalanced and fall if not properly supported and secured to the lifting device.

4-4
Boom Extension Cylinder

The boom extension cylinder is located inside the boom assembly and incorporates cables and pulleys that are responsible for extending the number 3 boom tube. The primary boom extension cylinder is equipped with counterbalance valves to prevent movement in the event of a hydraulic line failure.

How to Remove the Boom Extension Cylinder

WARNING Bodily injury hazard. This procedure requires specific repair skills, lifting equipment and a suitable workshop. Attempting this procedure without these skills and tools could result in death or serious injury and significant component damage. Dealer service is strongly recommended.

Note: When removing a hose assembly or fitting, the O-ring (if equipped) on the fitting and/or the hose end must be replaced. All connections must be torqued to specification during installation. Refer to Section 2, *Hydraulic Hose and Fitting Torque Specifications*.

Note: Perform this procedure with the boom fully retracted.

1 Raise the boom to a horizontal position.

2 **S-60 and S-65:** Remove the boom end cover retaining fasteners and remove the cover.

S-60 HC: Remove the boom end cover from the pivot end of the boom while guiding the small cable from the string potentiometer out of the slot of the cover. Rest the cover and string potentiometer on the counterweight.

NOTICE Component damage hazard. The cable from the string potentiometer can become damaged if it is kinked or pinched.

3 **S-60 HC:** Remove the string potentiometer cable break limit switch mounting fasteners.

4 **S-60 HC:** Remove the pulley retaining plate from the string potentiometer pulley bracket. Carefully remove the string potentiometer cable and limit switch assembly from the boom.

5 Remove the access covers from both sides of the boom at the pivot end.

6 Fully loosen the lock nuts on the extend cables. Do not remove the nuts.

7 Loosen the retract cable nut at the platform end of the boom. Pull the cable rod from the support and let it hang down.

BOOM COMPONENTS

8 Remove the cable guard fasteners and remove the cable guard.

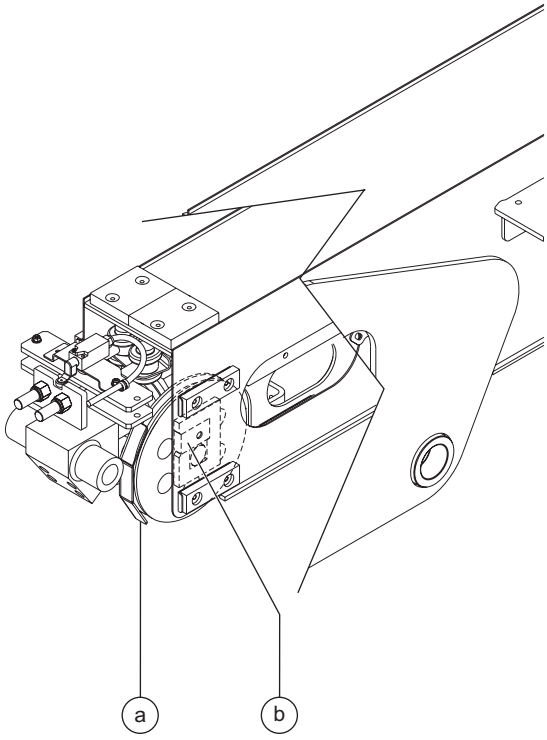

a cable guard
b retaining block

9 Locate the retaining plates that secure the retract cables to the inside of the number 3 boom tube.

10 Remove the cable retaining plates and pull the retract cables off of the pulleys. Lay the cables flat and out of the way.

11 Remove the fasteners from the retaining blocks from the extension cylinder saddle. Remove the blocks.

Note: Access the fasteners through the access hole in the outer boom tube at the pivot end.

12 Disconnect the wire connector to the extend cable break limit switch.

13 Remove the retaining fasteners that secure the extend cable mounting plates to the inside of the number 1 boom tube.

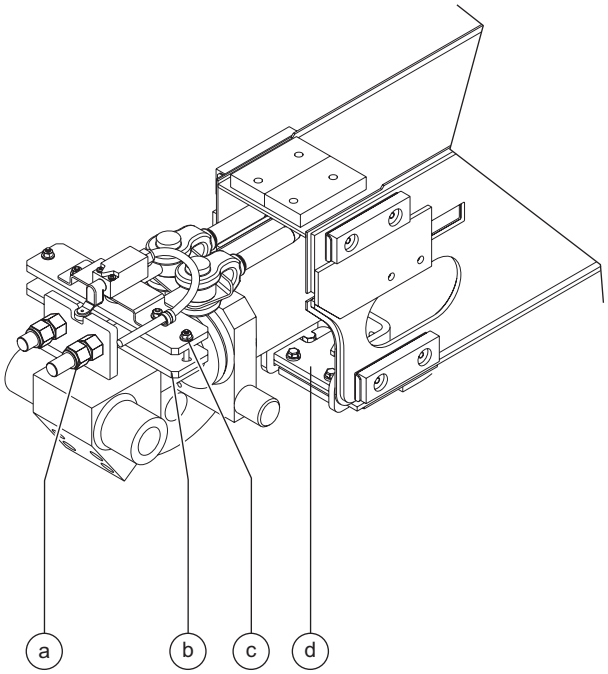

a extend cable lock nuts
b extend cable mounting plate
c extend cable mounting plate fastener
d extend cable bracket

14 Pull back on the extend cable mounting plate until it clears the blocks welded to the inside of the number 1 boom tube.

15 Lift up the extend cable mounting plate and push the extend cables towards the platform to create slack in the cables. Rest the cable and bracket assembly on top of the extend cylinder.

16 Locate the lower extend cable bracket on the bottom of the number 3 boom tube.

17 Remove the lower extend cable bracket mounting fasteners and pull back on the bracket to release it from the number 3 boom tube.

18 While pushing the lower extend cable bracket towards the platform, pull the extend cable mounting plate towards the pivot end of the boom.

19 Secure the extend cable bracket and cables to the cylinder to prevent them from falling off when removing the cylinder.

20 Remove the external snap rings from the extension cylinder pin at the pivot end of the boom.

21 Use a soft metal drift to remove the pin.

22 Tag, disconnect and plug the boom extension cylinder hydraulic hoses. Cap the fittings on the cylinder.

⚠WARNING Bodily injury hazard. Spraying hydraulic oil can penetrate and burn skin. Loosen hydraulic connections very slowly to allow the oil pressure to dissipate gradually. Do not allow oil to squirt or spray.

23 Attach a lifting strap from a 5 ton / 5000 kg overhead crane to the lug at the rod end of the boom extension cylinder.

24 Lift the boom extension cylinder with the crane until it clears the cylinder saddle inside the number 2 boom tube.

25 Carefully support and slide the extension cylinder out of the boom.

⚠WARNING Crushing hazard. The extension cylinder could fall when removed from the boom if not properly supported.

NOTICE Component damage hazard. Be careful not to damage the cable break limit switch.

NOTICE Component damage hazard. Be careful not to damage the counterbalance valves on the primary boom extension cylinder when removing the cylinder from the boom.

Note: During removal of the extension cylinder, the overhead crane strap will need to be carefully adjusted for proper balancing.

BOOM COMPONENTS

4-5
Boom Extend/Retract Cables

How to Adjust the Boom Extend/ Retract Cables

The boom extend/retract cables are responsible for the extension and retraction of the number 3 boom tube. Proper adjustment of the boom extend/retract cables and related components on a regular basis is essential to good machine performance and safe machine operation. The boom extend and retract functions should operate smoothly and be free of hesitation, jerking and unusual noise.

Note: Perform this procedure with the boom in a horizontal position.

1 Fully retract the boom.

2 **S-60 and S-65:** Remove the boom end cover retaining fasteners and remove the cover.

S-60 HC: Remove the boom end cover from the pivot end of the boom while guiding the small cable from the string potentiometer out of the slot of the cover. Rest the cover and string potentiometer on the counterweight.

NOTICE Component damage hazard. The cable from the string potentiometer can become damaged if it is kinked or pinched.

3 Inspect the threaded ends of the boom extend cables. The threads must be clean and in good condition with no damaged threads.

4 Adjust the extend cable adjustment nuts until approximately 1.5 inches / 4 cm of threads are visible past the nylock nut.

Note: If the cables have been replaced, be sure the adjustment nuts have been replaced. Do not re-use the existing nuts.

5 Extend the boom until there is approximately 3 feet / 1 m of travel left. Do not fully extend the boom.

6 Locate the retract cable adjustment nut on the bottom of the number 1 boom tube at the platform end of the boom.

7 Using a dial type torque wrench, torque the retract cable adjustment nut to 32-36 ft lbs / 43-49 Nm using gentle and steady torque.

8 Retract and extend the boom approximately 3 feet / 1 m two times and stop during the extension cycle. This will create slack in the retract cables.

Note:Be sure to not fully extend the boom. Stop when there is approximately 3 feet / 1 m of travel left.

9 Repeat steps 7 and 8 two to three times.

10 Fully extend the boom then retract the boom approximately 12 inches / 30 cm.

11 At the pivot end of the boom, visually inspect the boom extend cables for even cable droop or sag.

Note: If the boom extend cables are uneven, tighten the boom extend cable adjustment nut at the pivot end of the boom for the appropriate cable.

12 Visually inspect the cable break limit switch arm to be sure the wheel of the limit switch arm is centered in the notch of the pivot plate.

Note: If the boom extend cables are adjusted evenly, the wheel of the limit switch arm should be centered in the notch of the pivot plate.

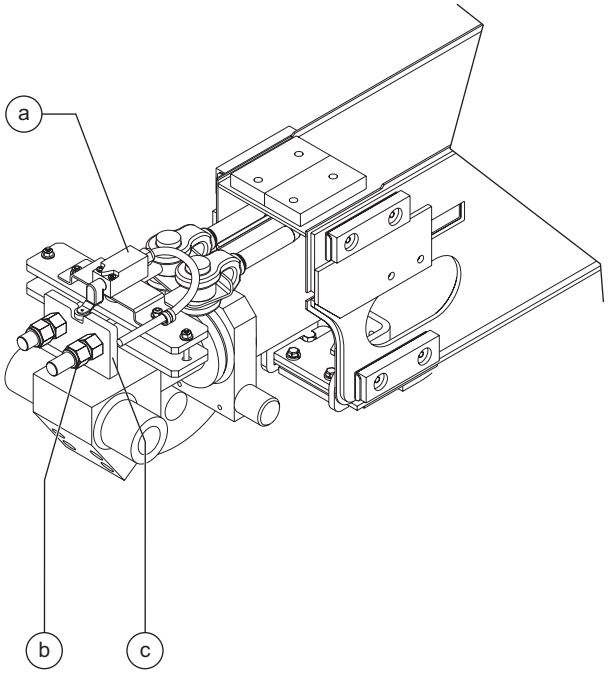

a cable break limit switch
b extend cable adjustment nut
c extend cable pivot plate

13 Install the boom end cover at the pivot end of the boom.

14 Fully retract and lower the boom to the stowed position.

How to Replace the Boom Extend/Retract Cables

Note: The cable pulleys must also be replaced when replacing the cables.

1 Remove the boom extension cylinder. See 4-4, *How to Remove the Boom Extension Cylinder.*

Boom extend cables:

2 Remove the cables from the lower boom extend cable bracket that attaches to the number 3 boom tube.

3 Remove the rue rings and clevis pins from the boom extend cables located near the extend cable break limit switch.

4 Remove the external snap rings from the boom extend cable pulley pivot pin. Use a soft metal drift to remove the pin.

Note: When driving the pivot pin out, be sure to drive it from the shaped end of the pin.

5 Remove the pulley and boom extend cables from the extension cylinder assembly. Discard the old cables and pulleys.

6 Route the new boom extend cables through the boom extend pulley bracket.

7 Install the new boom extend cable pulley, pivot pin and snap rings.

Note: Be sure the boom extend cables are routed through the grooves of the pulley and the upper wear pad on the extension cylinder.

8 Install the boom extend cable clevis pins and rue rings to the pivot plate near the cable break limit switch.

9 Install the boom extend cables to the lower extend cable bracket that mounts to the number 3 boom tube.

BOOM COMPONENTS

Boom retract cables:

10 Remove the cotter pins and clevis pins from the boom retract cables at the platform end of the boom.

Note: Always use a new cotter pin when installing a clevis pin.

11 Remove the wear pad fasteners from the upper wear pads on the number 1 boom tube. Remove the wear pads.

Note: Pay attention to the location of each wear pad and the quantity of shims for each one.

12 Attach a lifting strap from an overhead crane to the platform end of the boom.

13 Raise the boom using the overhead crane and place a wood block under the number 2 boom tube between the number 1 and number 2 boom tubes for support. This will create clearance between the boom tubes to remove the retract cables.

14 Attach the cable pulling tool or a rope to one of the boom retract cables at the pivot end of the boom.

Note: A cable pulling tool is available through Genie Parts Department (Genie part no. 94510)

15 At the platform end of the boom, pull on the boom retract cable that has the rope attached to it.

16 Pull the old cable completely out of the boom tube. Discard the old boom retract cable.

17 Remove the rope from the old cable and securely attach the rope to the same end of the new boom retract cable.

18 At the pivot end of the boom, carefully pull the rope with the new retract cable attached.

19 Pull the new cable towards the pivot end of the boom until the end of the cable is at the end of the boom tube. Remove the rope.

20 Repeat steps 14 through 19 for the other boom retract cable.

21 At the platform end of the boom, install the retract cables, clevis pins and new cotter pins to the adjustment plate.

22 Remove and discard the old boom retract pulleys from the pivot end of the boom extension cylinder.

23 Install the new boom retract pulleys to the pivot end of the boom extension cylinder.

24 Install the boom extension cylinder assembly into the boom.

Note: Before lowering the extension cylinder into the saddles of the number 1 boom tube, wrap the boom retract cables around the pulleys.

25 Adjust the boom extend/retract cables. See 4-5, *How to Adjust the Boom Extend/ Retract Cables.*

4-6 Platform Leveling Master Cylinder

The master cylinder acts as a pump for the slave cylinder. It's part of the closed circuit hydraulic loop that keeps the platform level through the entire range of boom motion. The master cylinder is located at the pivot end of the boom.

How to Remove the Platform Leveling Master Cylinder

Note: When removing a hose assembly or fitting, the O-ring (if equipped) on the fitting and/or the hose end must be replaced. All connections must be torqued to specification during installation. Refer to Section 2, *Hydraulic Hose and Fitting Torque Specifications*.

1 Raise the boom until the master cylinder is above the turntable covers.

2 Tag, disconnect and plug the master cylinder hydraulic hoses. Cap the fittings on the cylinder.

⚠WARNING Bodily injury hazard. Spraying hydraulic oil can penetrate and burn skin. Loosen hydraulic connections very slowly to allow the oil pressure to dissipate gradually. Do not allow oil to squirt or spray.

3 Place a 2 x 4 x 48 inches / 5 x 10 x 120 cm block of wood across the turntable covers. Position the block under the master cylinder.

4 Remove the pin retaining fastener from the master cylinder rod-end pivot pin.

5 Place a rod through the rod-end pivot pin and twist to remove the pin. Lower the rod end of the master cylinder onto the block.

6 Remove the pin retaining fastener from the barrel-end pivot pin.

7 Place a rod through the barrel-end pivot pin and twist to remove the pin.

8 Remove the master cylinder from the machine.

Engines

5-1 RPM Adjustment - Ford and Deutz Models

Refer to Maintenance Procedure B-9, *Check and Adjust the Engine RPM - Ford and Deutz Models.*

5-2 RPM Adjustment - Perkins Models

Refer to Maintenance Procedure A-11, *Check and Adjust the Engine RPM - Perkins Models.*

5-3 Flex Plate

The flex plate acts as a coupler between the engine and the pump. It is bolted to the engine flywheel and has a splined center to drive the pump.

Two different styles of flex plates have been used in the production of your machine model.
Type "A" flex plates utilize a flex plate installed onto the flywheel of the engine and a separate coupler installed onto the pump splined shaft.

Type "B" flex plates combines the pump coupler, as part of the flex plate, which is installed onto the engine flywheel.

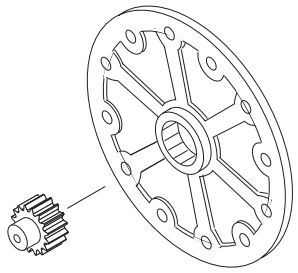

Type "A"
(flexplate with separate coupler)

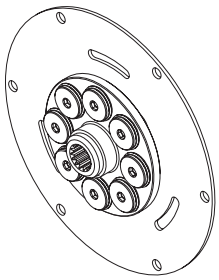

Type "B"
(flexplate with coupler combined)

How to Remove the Flex Plate

Deutz models:

1 Remove the tailpipe bracket mounting fasteners from the engine bell housing.

2 Support the drive pump assembly with an appropriate lifting device.

3 Remove all of the engine bell housing fasteners.

4 Carefully pull the pump and bell housing assembly away from the engine and secure it from moving.

NOTICE Component damage hazard. Hoses can be damaged if they are kinked or pinched.

5 Remove the flex plate mounting fasteners. Remove the flex plate from the flywheel.

GM models:

1 Remove the muffler clamp at the exhaust pipe.

2 Remove the muffler bracket to bell housing fasteners. Remove the muffler and bracket assembly.

3 Disconnect the electrical connector for the crankshaft position sensor located at the bottom of the bell housing.

4 Support the engine with a suitable lifting device. Do not lift it.

5 Remove the engine plate to vibration isolator fasteners.

6 Remove the engine mounting plate to bell housing fasteners.

NOTICE Component damage hazard. The engine could fall and the crankshaft position sensor can become damaged if the engine is not properly supported when the fasteners are removed.

7 Slide the engine mounting plate towards the pump as far as it will go.

8 Support the drive pump assembly with an appropriate lifting device.

9 Remove all of the engine bell housing fasteners.

10 Carefully pull the pump and bell housing assembly away from the engine and secure it from moving.

NOTICE Component damage hazard. Hoses can be damaged if they are kinked or pinched.

11 Remove the flex plate mounting fasteners. Remove the flex plate from the flywheel.

ENGINES

Ford LRG-425 EFI models:

1 Disconnect the electrical connector for the oxygen sensor at the tailpipe. Do not remove the oxygen sensor.

2 Remove the engine oil dipstick fasteners from the muffler bracket. Remove the dipstick from the engine.

3 Remove the muffler retaining fasteners from the exhaust pipe.

4 Support the muffler and bracket assembly with an overhead crane or other suitable lifting device.

5 Remove the muffler bracket mounting fasteners. Carefully remove the muffler and bracket assembly from the engine.

6 Support the engine with a suitable lifting device. Do not lift it.

7 Remove the engine plate to vibration isolator fasteners.

8 Remove the engine mounting plate to bell housing fasteners.

9 Raise the engine slightly to take the weight off of the engine mounting plate.

10 Slide the engine mounting plate towards the pump as far as it will go.

11 Support the drive pump assembly with an appropriate lifting device.

12 Remove all of the engine bell housing fasteners.

13 Carefully pull the pump and bell housing assembly away from the engine and secure it from moving.

NOTICE Component damage hazard. Hoses can be damaged if they are kinked or pinched.

14 Remove the flex plate mounting fasteners. Remove the flex plate from the flywheel.

Ford DSG-423 EFI models:

1 Disconnect the electrical connectors from both oxygen sensors at the tailpipe and exhaust manifold. Do not remove the oxygen sensors.

2 Remove the exhaust pipe fasteners at the muffler.

3 Support the muffler and bracket assembly with a suitable lifting device.

4 Remove the muffler bracket mounting fasteners from the bell housing. Carefully remove the muffler and bracket assembly from the engine.

5 Support the engine with an overhead crane or other suitable lifting device. Do not lift it.

6 Remove the engine mounting plate to bell housing fasteners.

7 Raise the engine slightly using the overhead crane and place a block of wood under the oil pan for support.

8 Support the drive pump assembly with an overhead crane or other suitable lifting device. Do not apply any lifting pressure.

9 Remove all of the engine bell housing retaining fasteners.

10 Carefully pull the pump and bell housing assembly away from the engine and secure it from moving.

NOTICE Component damage hazard. Hoses can be damaged if they are kinked or pinched.

11 Remove the flex plate mounting fasteners. Remove the flex plate from the flywheel.

Perkins models:

1 Remove the fuel filter/water separator mounting fasteners.

2 Remove the fuel filter/water separator and lay it to the side. Do not disconnect the hoses.

3 Support the drive pump assembly with an appropriate lifting device.

4 Remove all of the engine bell housing fasteners.

5 Carefully pull the pump and bell housing assembly away from the engine and secure it from moving.

NOTICE Component damage hazard. Hoses can be damaged if they are kinked or pinched.

6 Remove the flex plate mounting fasteners. Remove the flex plate from the flywheel.

How to Install a Type "A" Flex Plate

1 Install the flex plate onto the engine flywheel with the raised spline towards the pump.

2 **Ford models:** Torque the flex plate mounting bolts in sequence to 14 ft-lbs / 19 Nm. Then torque the flex plate mounting bolts in sequence to 20 ft-lbs / 27 Nm.

GM models: Torque the flex plate mounting bolts in sequence to 22 ft-lbs / 30 Nm. Then torque the flex plate mounting bolts in sequence to 31 ft-lbs / 42 Nm.

Deutz models: Torque the flex plate mounting bolts in sequence to 28 ft-lbs / 38 Nm. Then torque the flex plate mounting bolts in sequence to 40 ft-lbs / 54 Nm.

Perkins models: Torque the flex plate mounting bolts in sequence to 49 ft-lbs / 66 Nm. Then torque the flex plate mounting bolts in sequence to 70 ft-lbs / 95 Nm.

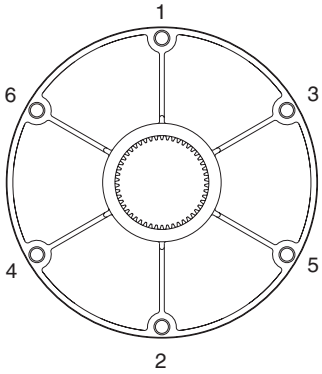

Ford and Deutz models

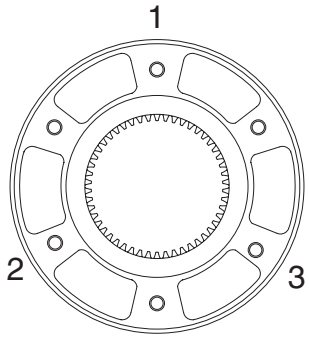

Perkins models

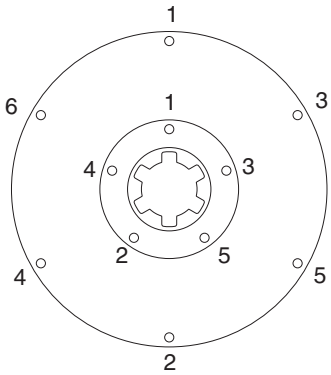

GM models

ENGINES

3 Install the pump coupler onto the pump shaft with the set screw toward the pump. Leave the appropriate gap between coupler and pump end plate for your engine.

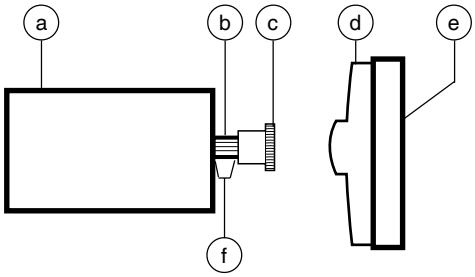

a pump
b pump shaft
c pump coupler
d flex plate with raised spline
e engine flywheel
f 3/16 inch / 4.8 mm gap - Diesel Models
1/16 inch / 1.5 mm gap - Ford LRG-425
0.080 inch / 2 mm gap - Ford DSG-423
5/32 inch / 3.8 mm gap - GM Models

4 Apply Loctite® removable thread sealant to the pump coupler set screw. Torque the set screw to 61 ft-lbs / 83 Nm.

5 Proceed to Repair Procedure, *How to Install the Pump and Bell Housing Assembly.*

How to Install a Type "B" Flex Plate

1 Install the flex plate onto the engine flywheel with the rubber vibration isolators towards the pump.

2 Apply Loctite® removable thread sealant to the flex plate fasteners and loosely install the fasteners.

3 **Deutz models:** Torque the flex plate mounting bolts in sequence to 28 ft-lbs / 38 Nm. Then torque the flex plate mounting bolts in sequence to 40 ft-lbs / 54 Nm.

Ford and Perkins models: Torque the flex plate mounting bolts in sequence to 14 ft-lbs / 19 Nm. Then torque the flex plate mounting bolts in sequence to 20 ft-lbs / 27 Nm.

4 Apply a high viscosity coupling grease (Genie part number 128025) to the splines of the pump shaft and flex plate.

Grease Specification
Shell Alvania® Grease CG, NLGI 0/1 or equivalent.

ENGINES

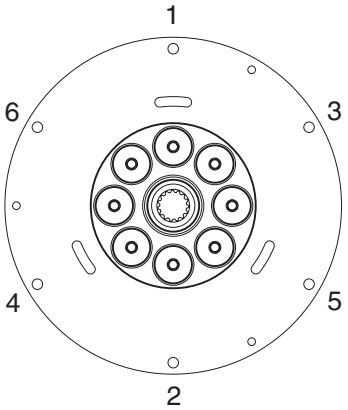

Ford models

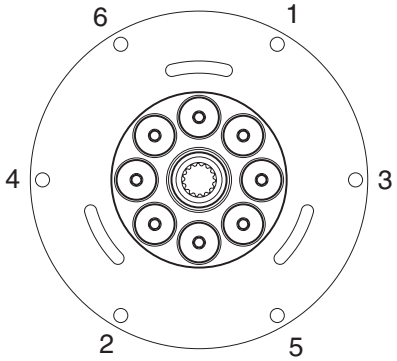

Deutz models

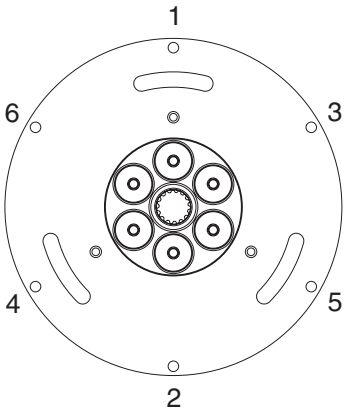

Perkins models

How to Install the Pump and Bell Housing Assembly

1 Install the pump and bell housing assembly.

Ford LRG-425 and Deutz models: Torque the bell housing mounting bolts labeled "C" in sequence to 28 ft-lbs / 38 Nm. Then torque the bell housing mounting bolts labeled "C" in sequence to 40 ft-lbs / 54 Nm.

Ford DSG-423 models: Torque the bell housing mounting bolts labeled "A" and "B" in sequence to 28 ft-lbs / 38 Nm and the mounting bolts labeled "C" to 49 ft-lbs / 66 Nm. Then torque the bell housing mounting bolts labeled "A" and "B" in sequence to 40 ft-lbs / 54 Nm and the mounting bolts labeled "C" to 70 ft-lbs / 95 Nm.

Perkins models: Torque the bell housing mounting bolts labeled "B" in sequence to 28 ft-lbs / 38 Nm and the mounting bolts labeled "A" to 49 ft-lbs / 66 Nm. Then torque the bell housing mounting bolts labeled "B" in sequence to 40 ft-lbs / 54 Nm and the mounting bolts labeled "A" to 70 ft-lbs / 95 Nm.

GM models: Torque the bellhousing mounting bolts in sequence to 28 ft-lbs / 38 Nm. Then torque the bell housing mounting bolts in sequence to 40 ft-lbs / 54 Nm.

NOTICE Component damage hazard. **Type "A" flexplate:** When installing the pump, do not force the pump coupler into the flexplate or damage to the pump shaft seal may occur.

NOTICE Component damage hazard. Do not force the drive pump during installation or the flex plate teeth may become damaged.

ENGINES

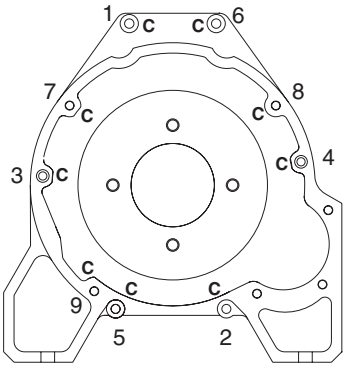

Ford LRG-425 EFI models

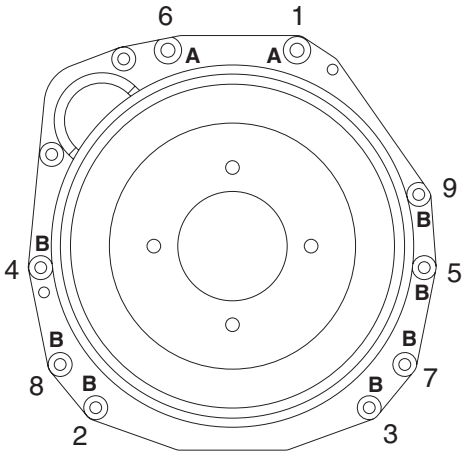

Perkins models

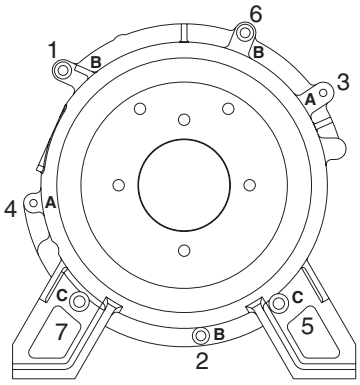

Ford DSG-423 EFI models

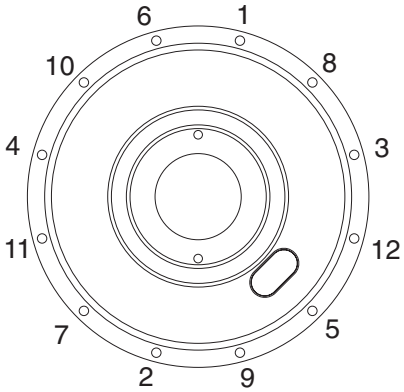

GM models

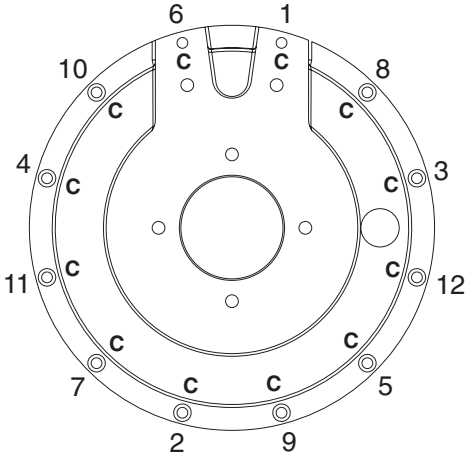

Deutz models

5-4
Engine Fault Codes - GM and Ford Models

How to Retrieve Engine Fault Codes

GM models:

When an engine malfunction is detected by the Electronic Control Module (ECM), a fault code is recorded and the check engine light will turn on at the ground controls. Special equipment is required to retrieve fault codes stored within the ECM. Contact the Genie Service Department for assistance in retrieving fault codes.

Note: If the check engine light is on and the engine is stopped, tag the machine and remove from service. Contact service personnel immediately.

Note: If the check engine light is on and the engine is still running, contact service personnel within 24 hours.

Ford models:

The ECM constantly monitors the engine by the use of sensors on the engine. The ECM also uses signals from the sensors to initiate sequential fuel injection and make constant and instantaneous changes to ignition timing, fuel delivery and throttle position to maintain the engine's running condition at its highest efficiency while at the same time keeping exhaust emissions to a minimum. When a sensor fails or returns signals that are outside of set parameters, the ECM will store a fault code in memory that relates to the appropriate sensor and will turn on the Check Engine Light.

Refer to Section 5, *How to Retrieve Engine Fault Codes* for your specific model of engine. Use the Fault Code Chart within Section 5 to aid in identifying the fault.

Hydraulic Pumps

6-1 Function Pump

How to Remove the Function Pump

Note: When removing a hose assembly or fitting, the O-ring (if equipped) on the fitting and/or the hose end must be replaced. All connections must be torqued to specification during installation. Refer to Section 2, *Hydraulic Hose and Fitting Torque Specifications*.

1 **Models without hydraulic tank shut-off valves:** Remove the drain plug from the hydraulic tank and completely drain the tank into a suitable container. See capacity specifications.

Models with hydraulic tank shut-off valves: Locate the two hydraulic tank valves at the hydraulic tank through the access hole underneath the turntable. Close the valves.

NOTICE Component damage hazard. The engine must not be started with the hydraulic tank shut-off valves in the closed position or component damage will occur. If the tank valves are closed, remove the key from the key switch and tag the machine to inform personnel of the condition.

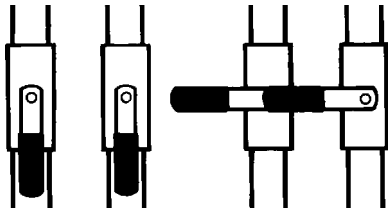

2 Tag, disconnect and plug the function pump hydraulic hoses. Cap the fittings on the pump.

WARNING Bodily injury hazard. Spraying hydraulic oil can penetrate and burn skin. Loosen hydraulic connections very slowly to allow the oil pressure to dissipate gradually. Do not allow oil to squirt or spray.

3 Remove the pump mounting bolts. Carefully remove the pump.

Models without hydraulic tank shut-off valves:

NOTICE Component damage hazard. Be sure to fill the hydraulic tank to specification and prime the pump after installing the pump.

Models with hydraulic tank shut-off valves:

NOTICE Component damage hazard. Be sure to open the two hydraulic tank valves and prime the pump after installing the pump.

6-2
Drive Pump

The drive pump is a bi-directional variable displacement piston pump. The pump output is controlled by the electro-proportional controller, located on the pump. The only adjustment that can be made to the pump is the neutral or null adjustment. Any internal service to the pump should only be performed at an authorized Eaton Hydraulics center. Call Genie Industries Service Department to locate your local authorized service center.

How to Remove the Drive Pump

NOTICE Component damage hazard. The work area and surfaces where this procedure will be performed must be clean and free of debris that could get into the hydraulic system and cause severe component damage. Dealer service is recommended.

Note: When removing a hose assembly or fitting, the O-ring (if equipped) on the fitting and/or the hose end must be replaced. All connections must be torqued to specification during installation. Refer to Section 2, *Hydraulic Hose and Fitting Torque Specifications*.

1 Disconnect the electrical connection at the electro-proportional controller located on the drive pump.

2 **Models without hydraulic tank shut-off valves:** Remove the drain plug from the hydraulic tank and completely drain the tank into a suitable container. See capacity specifications.

Models with hydraulic tank shut-off valves: Locate the two hydraulic tank valves at the hydraulic tank through the access hole underneath the turntable. Close the valves.

NOTICE Component damage hazard. The engine must not be started with the hydraulic tank shut-off valves in the closed position or component damage will occur. If the tank valves are closed, remove the key from the key switch and tag the machine to inform personnel of the condition.

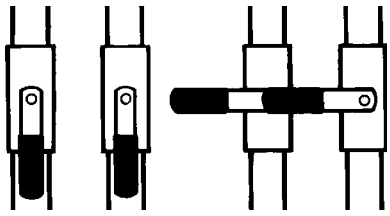

3 Tag and disconnect and plug the hydraulic hoses from the drive and function pumps. Cap the fittings on the pumps.

WARNING Bodily injury hazard. Spraying hydraulic oil can penetrate and burn skin. Loosen hydraulic connections very slowly to allow the oil pressure to dissipate gradually. Do not allow oil to squirt or spray.

HYDRAULIC PUMPS

4 Support the pump with a lifting device and remove the two drive pump mounting fasteners.

5 Carefully pull the drive pump out until the pump coupler separates from the flex plate.

6 Remove the drive pump from the machine.

NOTICE Component damage hazard. The hydraulic pump may become unbalanced and fall if not properly supported.

NOTICE Component damage hazard. When installing the pump, do not force the pump coupler into the flexplate or damage to the pump shaft seal may occur.

Models without hydraulic tank shut-off valves:

NOTICE Component damage hazard. Be sure to fill the hydraulic tank to specification and prime the pump after installing the pump.

Models with hydraulic tank shut-off valves:

NOTICE Component damage hazard. Be sure to open the two hydraulic tank valves and prime the pump after installing the pump.

How to Prime the Pump

1 Connect a 0 to 600 psi / 0 to 50 bar pressure gauge to the test port on the drive pump.

2 Remove the safety pin (if equipped) from the engine pivot plate latch.

Note: The engine pivot plate latch is located under the engine turntable pivot plate at the counterweight end of the machine.

3 Open the engine pivot plate latch and swing the engine pivot plate out and away from the machine.

4 **GM and Ford models:** Close the valve on the LPG tank then disconnect the hose from the tank. Move the fuel select switch to the LPG position.

Perkins models: Disconnect the engine wiring harness from the fuel solenoid at the injector pump.

Deutz models: Hold the manual fuel shutoff valve clockwise to the closed position.

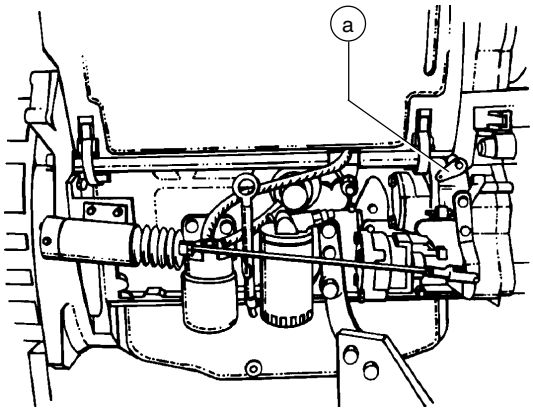

a manual fuel shutoff valve

5 Have another person crank the engine with the starter motor for 15 seconds, wait 15 seconds, then crank the engine an additional 15 seconds or until the pressure reaches 320 psi / 22 bar.

6 **GM and Ford models:** Connect the LPG hose to the LPG tank and open the valve on the tank. Move the fuel select switch to the gasoline position.

Perkins models: Connect the engine wiring harness to the fuel solenoid.

Deutz models: Release the manual fuel shutoff valve.

7 Start the engine from the ground controls and check for hydraulic leaks.

This page intentionally left blank.

Manifolds

7-1
Function Manifold Components

The function manifold is located underneath the ground controls side turntable cover.

Index No.	Description	Schematic Item	Function	Torque
1	Counterbalance valve	H	Platform level down	30-35 ft-lbs / 41-47 Nm
2	Counterbalance valve	G	Platform level up	30-35 ft-lbs / 41-47 Nm
3	Proportional solenoid valve	M	Boom extend/retract	30-35 ft-lbs / 41-47 Nm
4	Solenoid valve, 2 position 3 way	C	Boom retract	30-35 ft-lbs / 41-47 Nm
5	Solenoid valve, 2 position 3 way	B	Boom extend	30-35 ft-lbs / 41-47 Nm
6	Solenoid valve, 3 position 4 way	D	Turntable rotate	20-25 ft-lbs / 27-34 Nm
7	Proportional solenoid valve	T	Boom up/down circuit	30-35 ft-lbs / 41-47 Nm
8	Solenoid valve, 3 position 4 way	BB	Steer left/right	20-25 ft-lbs / 27-34 Nm
9	Check valve, 30 psi / 2 bar	I	Differential sensing circuit, platform rotate left and jib boom up (S-65)	20-25 ft-lbs / 27-34 Nm
10	Check valve, 30 psi / 2 bar	J	Differential sensing circuit, platform rotate right and jib boom down (S-65)	20-25 ft-lbs / 27-34 Nm
11	Check valve	N	Differential sensing circuit, boom extend/retract	10-12 ft-lbs / 14-16 Nm
12	Solenoid valve, 2 position 3 way	F	Boom down	30-35 ft-lbs / 41-47 Nm
13	Solenoid valve, 2 position 3 way	E	Boom up	30-35 ft-lbs / 41-47 Nm
14	Check valve	O	Differential sensing circuit, turntable rotate	10-12 ft-lbs / 14-16 Nm
15	Check valve	R	Differential sensing circuit, boom up/down	10-12 ft-lbs / 14-16 Nm
16	Priority flow regulator valve, 3.5 gpm / 13.2 L/min	AA	Steer left/right circuit	30-35 ft-lbs / 41-47 Nm
17	Differential sensing valve, 110 psi / 7.6 bar	S	Boom up/down circuit	30-35 ft-lbs / 41-47 Nm
18	Differential sensing valve, 150 psi / 10.3 bar	P	Turntable rotate circuit	30-35 ft-lbs / 41-47 Nm

This list continues. Please turn the page

MANIFOLDS

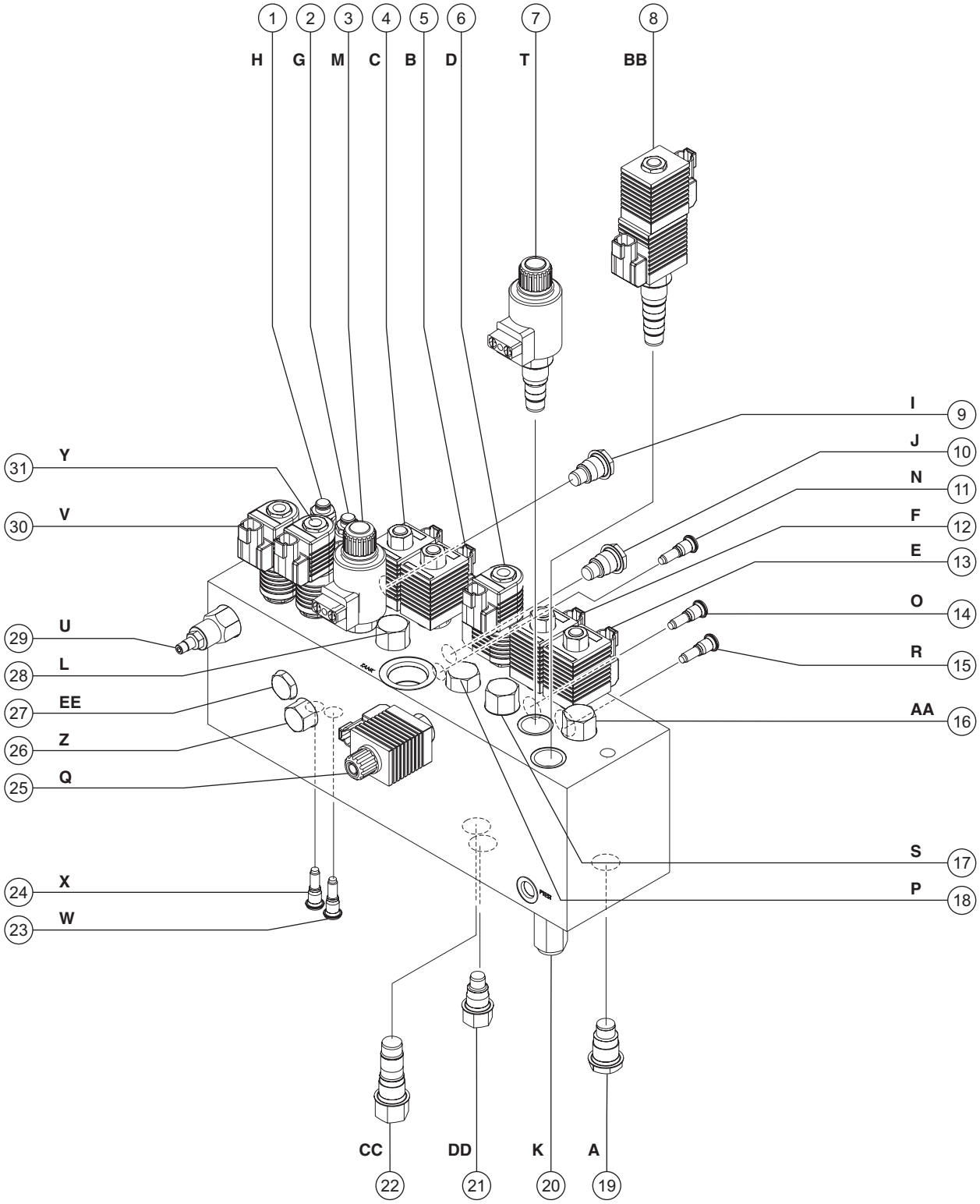
1
2
3
4
5
6
7
8
H
G
M
C
B
D
T
BB
I
9
J
10
N
11
F
12
E
13
O
14
R
15
AA
16
S
17
P
18
31
Y
30
V
29
U
28
L
27
EE
26
Z
25
Q
24
X
23
W
CC
DD
K
A
22
21
20
19

Function Manifold Components, continued

Index No.	Description	Schematic Item	Function	Torque
19	Check valve, 5 psi / 0.3 bar	A	Blocks flow from auxiliary pump to function pump	30-35 ft-lbs / 41-47 Nm
20	Relief valve, 3000 psi / 206.8 bar	K	System relief	30-35 ft-lbs / 41-47 Nm
21	Flow control valve, 0.1 gpm / 0.38 L/min	DD	Bleeds off differential sensing valves to tank	20-25 ft-lbs / 27-34 Nm
22	Differential sensing valve, 150 psi / 10.3 bar	CC	Differential sensing circuit, meters flow to functions	30-35 ft-lbs / 41-47 Nm
23	Check valve	W	Differential sensing circuit, platform level up	10-12 ft-lbs / 14-16 Nm
24	Check valve	X	Differential sensing circuit, platform level down	10-12 ft-lbs / 14-16 Nm
25	Proportional solenoid valve	Q	Turntable rotate left/right	20-25 ft-lbs / 27-34 Nm
26	Flow control valve, 0.6 gpm / 2.27 L/min	Z	Platform rotate and jib boom (S-65)	20-25 ft-lbs / 27-34 Nm
27	Check valve, 30 psi / 2 bar	EE	Platform rotate and jib boom circuit (S-65) (prevents hydraulic hoses from draining back to tank)	20-25 ft-lbs / 27-34 Nm
28	Differential sensing valve, 110 psi / 7.6 bar	L	Boom extend/retract circuit	30-35 ft-lbs / 41-47 Nm
29	Needle valve	U	Platform level circuit	30-35 ft-lbs / 41-47 Nm
30	Solenoid valve, 3 position 4 way	V	Platform level up/down	20-25 ft-lbs / 27-34 Nm
31	Solenoid valve, 3 position 4 way	Y	Platform rotate and jib boom up/down (S-65)	20-25 ft-lbs / 27-34 Nm

MANIFOLDS

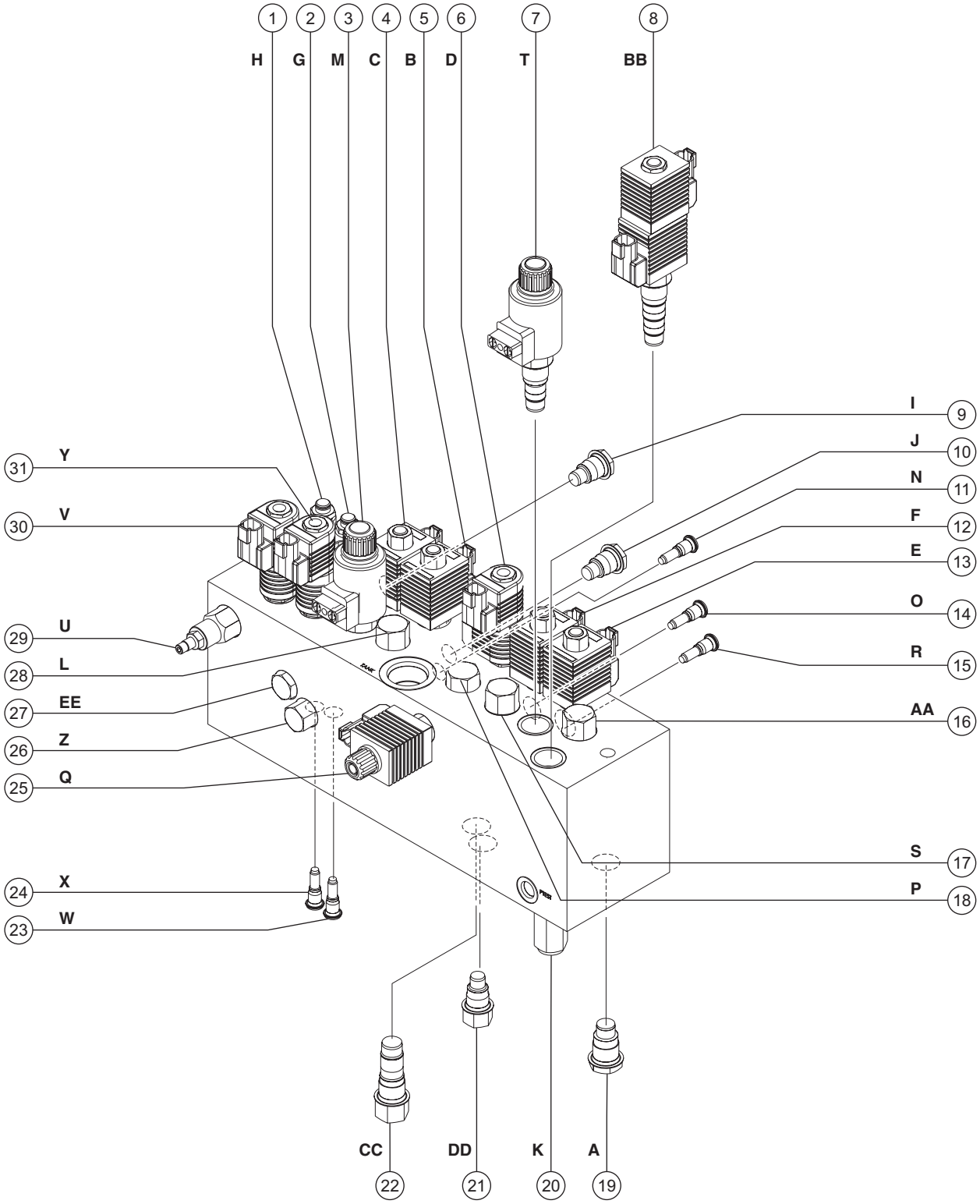
1
2
3
4
5
6
7
8
H
G
M
C
B
D
T
BB
I
9
J
10
N
11
F
12
E
13
O
14
R
15
AA
16
S
17
P
18
31
Y
30
V
29
U
28
L
27
EE
26
Z
25
Q
24
X
23
W
CC
DD
K
A
22
21
20
19

7-2 Valve Adjustments - Function Manifold

How to Adjust the System Relief Valve

Note: Perform this procedure with the boom in the stowed position.

1 Connect a 0 to 5000 psi / 0 to 350 bar pressure gauge to the PTEST port on the function manifold.

2 Start the engine from the ground controls.

3 Hold the function enable/rpm select toggle switch to the high idle position. Activate and hold the boom retract toggle switch with the boom fully retracted.

4 Observe the pressure reading on the pressure gauge. Refer to Section 2, *Specifications.*

5 Turn the engine off. Use a wrench to hold the relief valve and remove the cap (item K).

6 Adjust the internal hex socket. Turn it clockwise to increase the pressure or counterclockwise to decrease the pressure. Install the relief valve cap.

⚠WARNING Tip-over hazard. Do not adjust the relief valve higher than specified.

7 Repeat steps 2 through 5 and recheck relief valve pressure.

8 Remove the pressure gauge.

MANIFOLDS

7-3
Jib Boom / Platform Rotate Manifold Components

Index No.	Description	Schematic Item	Function	Torque
1	Solenoid valve, 2 position 3 way	FF	Platform rotate/jib boom select	20-25 ft-lbs / 27-34 Nm

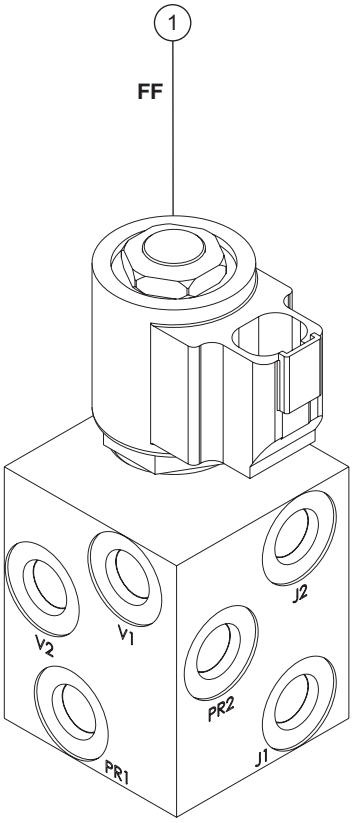

MANIFOLDS

7-4
Brake/Two-Speed Manifold Components

The brake/two-speed manifold is mounted near the turntable rotator.

Index No.	Description	Schematic Item	Function	Torque
1	Orifice, 0.025 inch / 0.64 mm	JJ	Brake release	
2	Solenoid valve, 2 position 3 way	KK	Brake release	20-25 ft-lbs / 27-34 Nm
3	Solenoid valve, 2 position 3 way	LL	Two-speed motor shift	20-25 ft-lbs / 27-34 Nm
4	Check valve	II	Brake release circuit	20-25 ft-lbs / 27-34 Nm

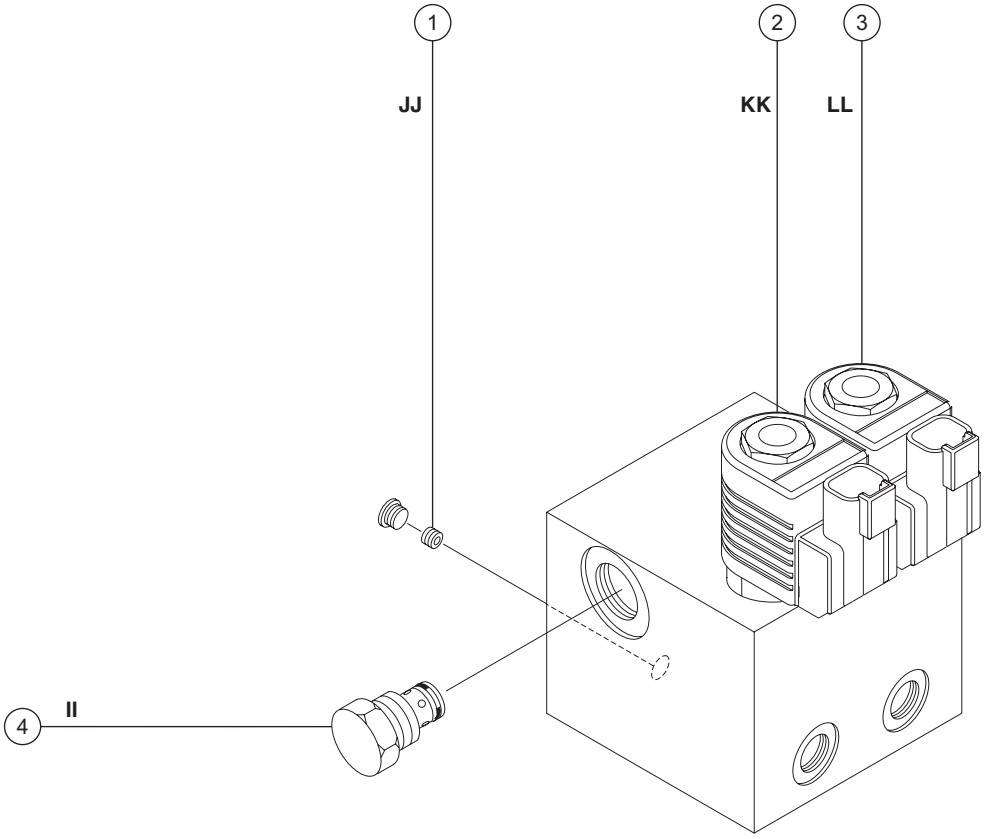

MANIFOLDS

7-5
Turntable Rotation Manifold Components

The turntable rotation manifold is mounted to the turntable rotation motor.

Index No.	Description	Schematic Item	Function	Torque
1	Counterbalance valve	MM	Turntable rotate right	35-40 ft-lbs / 47-54 Nm
2	Counterbalance valve	NN	Turntable rotate left	35-40 ft-lbs / 47-54 Nm
3	Shuttle valve, 2 position 3 way	OO	Turntable rotation brake release	10-13 ft-lbs / 14-18 Nm
4	Orifice, 0.030 inch / 0.76 mm	PP	Brake release circuit (located inside port)	

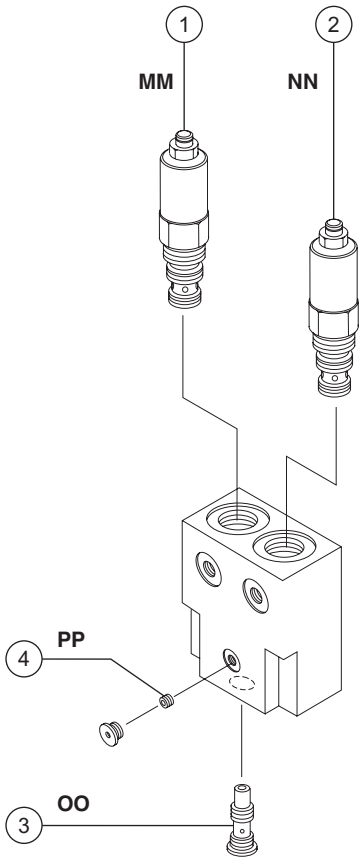

7-6
Oscillate Directional Valve Components

The oscillate directional valve is mounted inside the drive chassis at the non-steer end.

Index No.	Description	Function	Torque
1	Cap	Breather	20-25 ft-lbs / 27-33 Nm
2	Spool valve	Directional control	

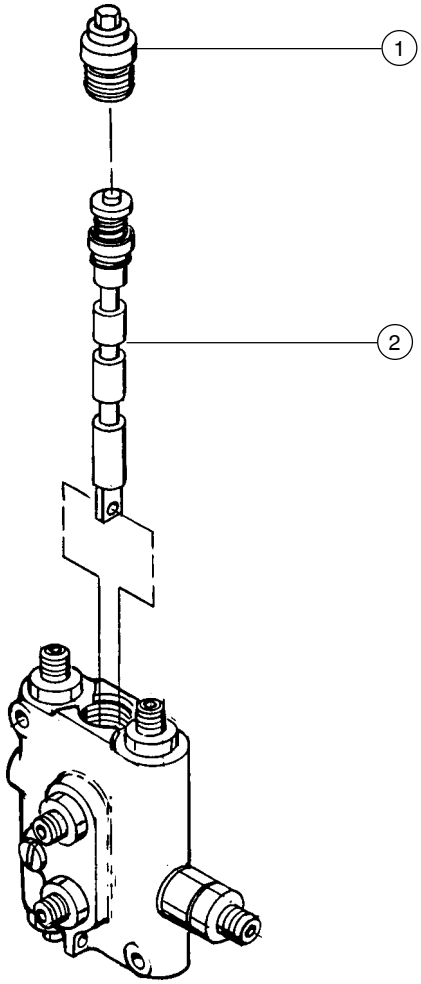

MANIFOLDS

How to Set Up the Oscillate Directional Valve

Note: Adjustment of the oscillate directional valve linkage is only necessary when the linkage or valve has been replaced.

1 Lower the boom to the stowed position.

2 Use a "bubble type" level to be sure the floor is completely level.

⚠WARNING Tip-over hazard. Failure to perform this procedure on a level floor could compromise the stability of the machine resulting in the machine tipping over.

3 Check the tire pressure in all four tires and add air if needed to meet specification.

Note: The tires on some machines are foam-filled and do not need air added to them.

4 Remove the drive chassis cover and the non-steer axle covers.

5 Place a "bubble type" level across the drive chassis non-steer end. Check to be sure the drive chassis is completely level.

6 Remove the heim joint retaining fastener from the axle.

7 To level the drive chassis, start the engine and push up or pull down on the threaded rod until the machine is completely level.

8 Verify that the ground and drive chassis are completely level.

9 Adjust the heim joint until the hole lines up with the retaining fastener hole in the axle.

10 Install the heim joint to the axle and tighten the jam nut.

11 Check to be sure the drive chassis is completely level.

12 Measure the distance between the drive chassis and the non-steer axle on both sides (from the inside of the drive chassis).

Note: If the distance is not equal and the adjustment to the linkage was completed with the ground and drive chassis level, repeat steps 6 through 11 OR consult the Genie Service Department.

7-7
Valve Adjustments - Oscillate Relief Valve

How to Adjust the Oscillate Relief Valve Pressure

1 Remove the drive chassis cover from the non-steer end of the machine.

2 Connect a 0 to 2000 psi / 0 to 150 bar pressure gauge to the diagnostic nipple located near the oscillate directional valve.

3 Disconnect the directional valve linkage, by removing the heim joint and retaining fastener from the axle.

4 Start the engine from the platform controls. Move the engine idle toggle switch to the maintained high idle position.

5 With the engine running in high rpm, manually activate the valve and observe the pressure reading on the pressure gauge. Refer to Section 2, *Specifications*.

6 Turn the engine off.

7 Locate the relief valve on the directional valve and remove the cap.

8 Adjust the internal screw. Turn it clockwise to increase the pressure or counterclockwise to decrease the pressure. Install the valve cap.

⚠WARNING Tip-over hazard. Do not adjust the relief valve higher than specified.

9 Repeat steps 4 through 7 and manually activate the valve to confirm the valve pressure.

10 Turn the engine off, remove the pressure gauge and assemble the directional valve linkage.

11 Install the cover on the non-steer end of the drive chassis.

MANIFOLDS

7-8
Drive Oil Diverter Manifold Components (welder option)

The oil diverter manifold is mounted to the hydraulic generator located in the engine compartment.

Index No.	Description	Schematic Item	Function	Torque
1	Directional Valve	CU	Diverter valve	80-90 ft-lbs / 108-122 Nm
2	Orifice disc, 0.030 inch / 0.080 cm	CV	Delays shift to drive	
3	Solenoid valve	CW	Pilot valve to diverter	35-40 ft-lbs / 47-54 Nm
4	Relief valve	CX	Charge pressure circuit	35-40 ft-lbs / 47-54 Nm
5	Check valve	CY	Prevents oil to generator	35-40 ft-lbs / 47-54 Nm

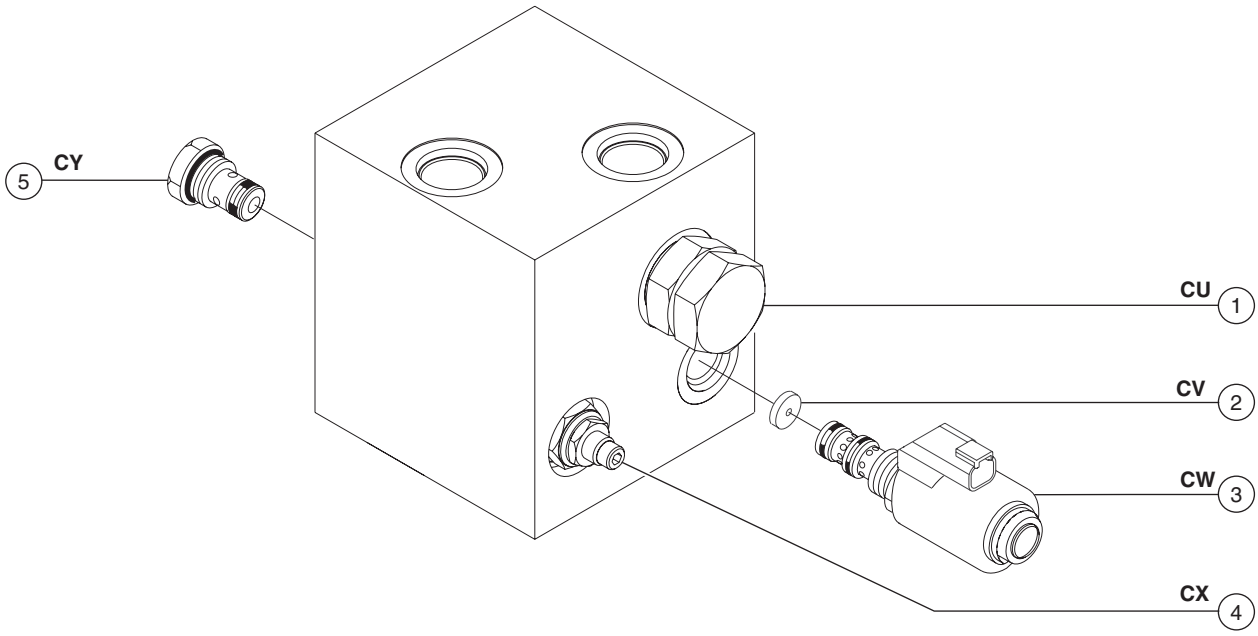

7-9
Traction Manifold Components, 2WD

The traction manifold is mounted inside the drive chassis at the non-steer end.

Index No.	Description	Schematic Item	Function	Torque
1	Relief valve, 280 psi / 19.3 bar	TT	Charge pressure circuit	30-35 ft-lbs / 41-47 Nm
2	Flow divider/combiner valve	WW	Controls flow to drive motors in forward and reverse	90-100 ft-lbs / 122-136 Nm
3	Check valve	SS	Drive circuit	30-35 ft-lbs / 41-47 Nm
4	Check valve	XX	Drive circuit	30-35 ft-lbs / 41-47 Nm
5	Shuttle valve, 3 position 3 way	UU	Charge pressure circuit that directs hot oil out of low pressure side of drive pump	50-55 ft-lbs / 68-75 Nm
6	Orifice, 0.070 inch / 1.78 mm	VV	Drive motor circuit	

MANIFOLDS

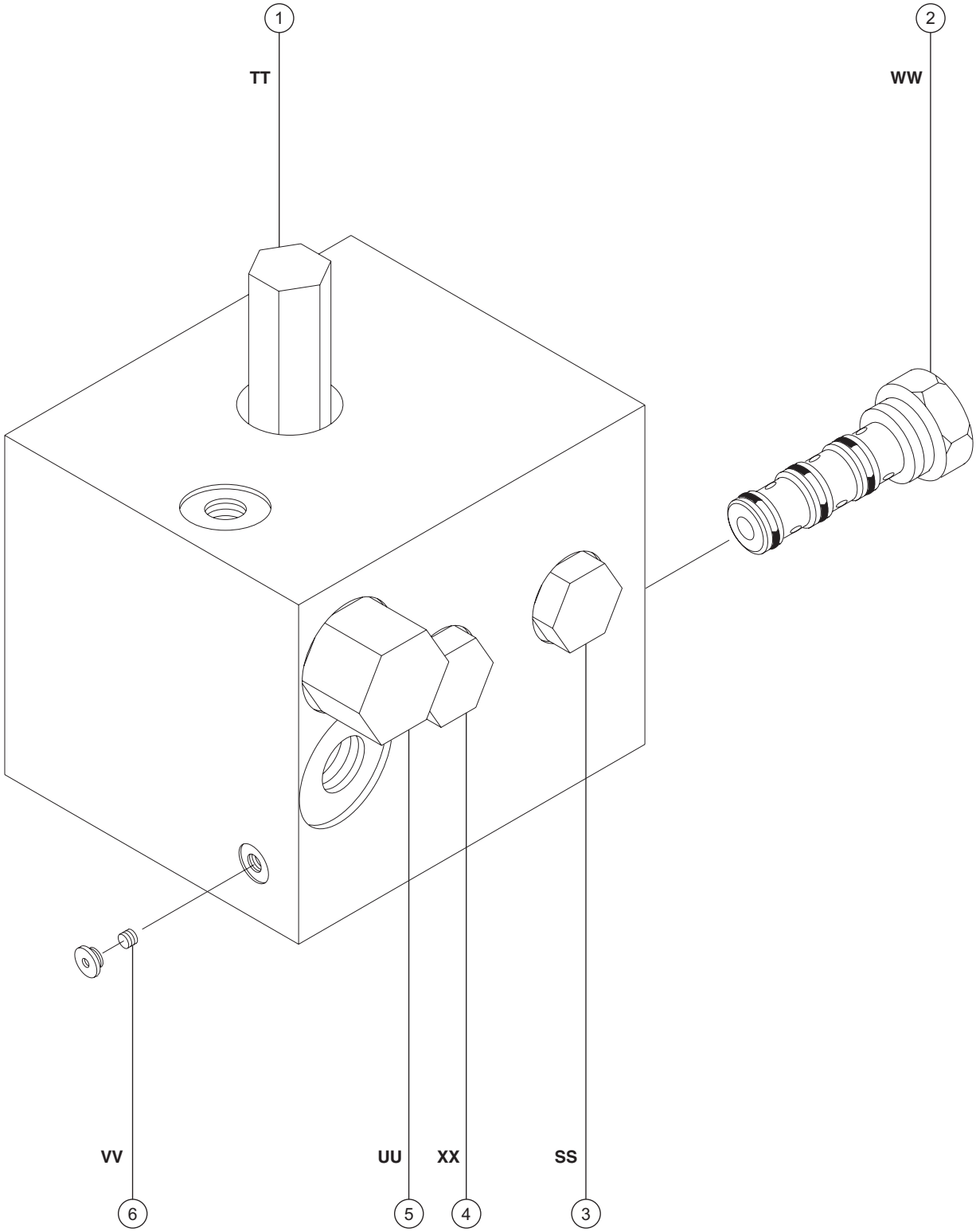

7-10 Valve Adjustments, 2WD Traction Manifold

How to Adjust the Charge Pressure Relief Valve

1 Connect a 0 to 600 psi / 0 to 50 bar pressure gauge to the test port on the drive pump.

2 Hold the charge pressure relief valve and remove the cap (item TT).

3 Turn the internal hex socket clockwise fully until it stops. Install the cap.

4 Start the engine and move and hold the function enable/rpm select toggle switch to the high rpm (rabbit symbol) position. Note the reading on the pressure gauge.

5 Turn the engine off.

6 Remove the pressure gauge from the drive pump. Connect the gauge to the test port located on the traction manifold.

7 Start the engine from the platform controls. Press down the foot switch and slowly move the drive control handle off center just until the machine begines to move. Note the reading on the pressure gauge. Turn the machine off.

8 Hold the charge pressure relief valve and remove the cap (item TT).

9 Adjust the internal hex socket until the pressure reading on the gauge is 30 psi / 2 bar less than the pressure reading on the pump. Turn it clockwise to increase the pressure or counterclockwise to decrease the pressure. Install the valve cap.

10 Repeat steps 7 through 9 until the pressure reading at the drive manifold is 30 psi / 2 bar less than the pressure reading at the pump.

11 Turn the engine off and remove the pressure gauge.

MANIFOLDS

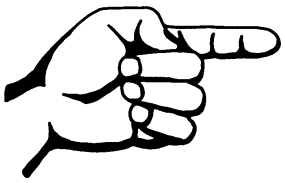

This page intentionally left blank.

7-11
Traction Manifold Components, 4WD

The traction manifold is mounted inside the drive chassis at the non-steer end.

Index No.	Description	Schematic Item	Function	Torque
1	Check valve	TT	Steer end drive motor circuit	35-40 ft-lbs / 14-16 Nm
2	Check valve	SS	Non-steer end drive motor circuit	35-40 ft-lbs / 14-16 Nm
3	Flow divider/combiner valve	AB	Controls flow to flow divider/combiner valves 11 and 13	80-90 ft-lbs / 108-122 Nm
4	Check valve	AF	Non-steer end drive motor circuit	60-70 ft-lbs / 81-95 Nm
5	Orifice, 0.040 inch / 1 mm	AC	Equalizes pressure on both sides of flow divider/combiner valve 3	
6	Orifice, 0.040 inch / 1 mm	AE	Equalizes pressure on both sides of flow divider/combiner valve 11	
7	Orifice, 0.040 inch / 1 mm	WW	Equalizes pressure on both sides of flow divider/combiner valve 13	
8	Check valve	AG	Steer end drive motor circuit	60-70 ft-lbs / 81-95 Nm
9	Check valve	ZZ	Steer end drive motor circuit	35-40 ft-lbs / 14-16 Nm
10	Shuttle valve, 3 position 3 way	VV	Charge pressure circuit that directs hot oil out of low pressure side of drive pump	80-90 ft-lbs / 108-122 Nm
11	Flow divider/combiner valve	AD	Controls flow to steer end drive motors in forward and reverse	80-90 ft-lbs / 108-122 Nm
12	Check valve	YY	Non-steer end drive motor circuit	35-40 ft-lbs / 14-16 Nm
13	Flow divider/combiner valve	XX	Controls flow to non-steer end drive motors in forward and reverse	80-90 ft-lbs / 108-122 Nm
14	Relief valve, 280 psi / 19.3 bar	UU	Charge pressure circuit	35-40 ft-lbs / 14-16 Nm

MANIFOLDS

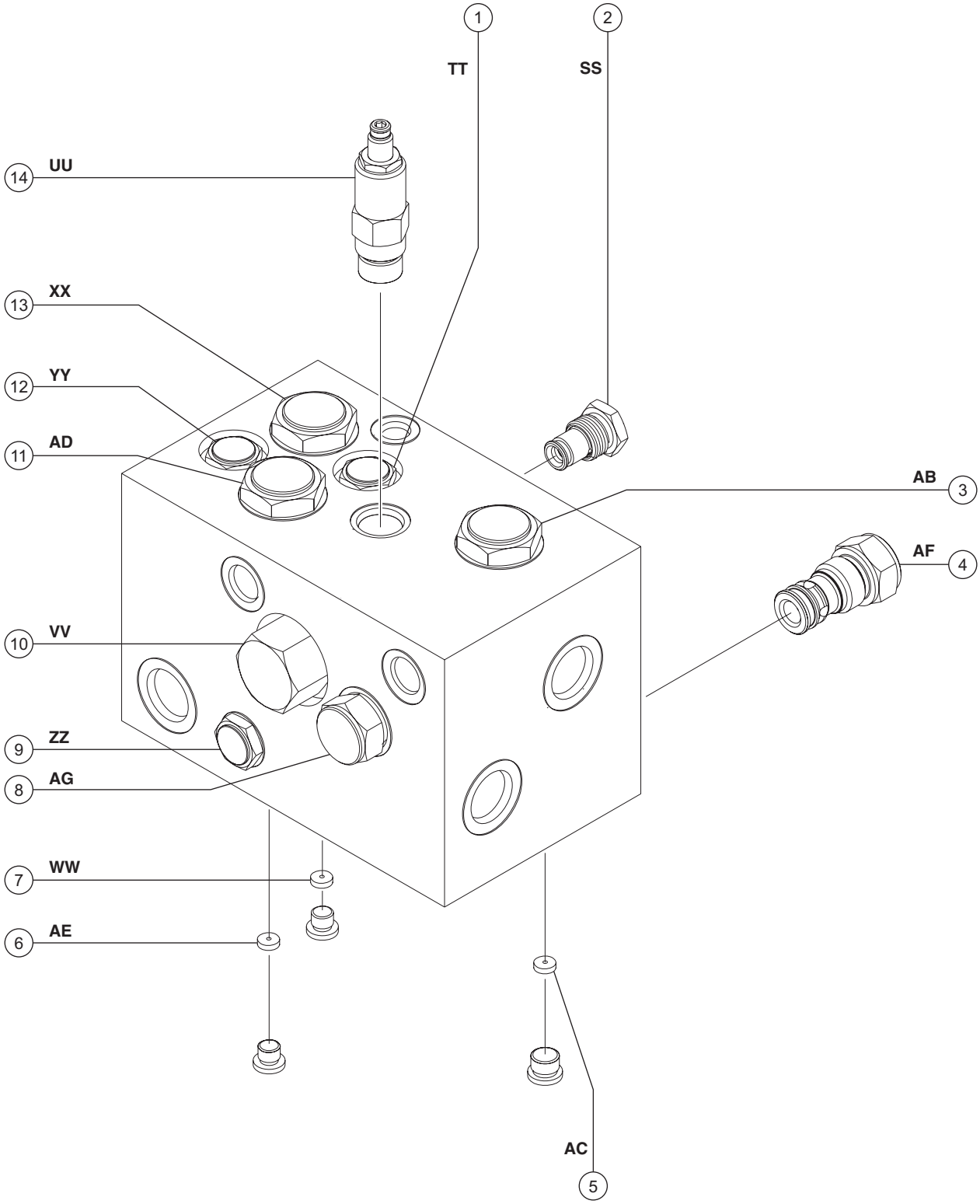

7-12 Valve Adjustments, 4WD Traction Manifold

How to Adjust the Charge Pressure Relief Valve

1 Connect a 0 to 600 psi / 0 to 50 bar pressure gauge to the test port on the drive pump.

2 Hold the charge pressure relief valve and remove the cap (item UU).

3 Turn the internal hex socket clockwise fully until it stops. Install the cap.

4 Start the engine and move and hold the function enable/rpm select toggle switch to the high rpm (rabbit symbol) position. Note the reading on the pressure gauge.

5 Turn the engine off.

6 Remove the pressure gauge from the drive pump. Connect the gauge to the test port located on the traction manifold.

7 Start the engine from the platform controls. Press down the foot switch and slowly move the drive control handle off center just until the machine begines to move. Note the reading on the pressure gauge. Turn the machine off.

8 Hold the charge pressure relief valve and remove the cap (item UU).

9 Adjust the internal hex socket until the pressure reading on the gauge is 30 psi / 2 bar less than the pressure reading on the pump. Turn it clockwise to increase the pressure or counterclockwise to decrease the pressure. Install the valve cap.

10 Repeat steps 7 through 9 until the pressure reading at the drive manifold is 30 psi / 2 bar less than the pressure reading at the pump.

11 Turn the engine off and remove the pressure gauge.

MANIFOLDS

7-13 Valve Coils

How to Test a Coil

A properly functioning coil provides an electromotive force which operates the solenoid valve. Critical to normal operation is continuity within the coil. Zero resistance indicates the coil has failed.

Since coil resistance is sensitive to temperature, resistance values outside specification can produce erratic operation. When coil resistance decreases below specification, amperage increases. As resistance rises above specification, voltage increases.

While valves may operate when coil resistance is outside specification, maintaining coils within specification will help ensure proper valve function over a wide range of operating temperatures.

⚠WARNING Electrocution/burn hazard. Contact with electrically charged circuits could result in death or serious injury. Remove all rings, watches and other jewelry.

1 Tag and disconnect the wiring from the coil to be tested.

2 Test the coil resistance.

⊙ Result: The resistance should be within specification, plus or minus 30%.

⊠ Result: If the resistance is not within specification, plus or minus 30%, replace the coil.

Valve Coil Resistance Specification

Note: The following coil resistance specifications are at an ambient temperature of 68°F / 20°C. As valve coil resistance is sensitive to changes in air temperature, the coil resistance will typically increase or decrease by 4% for each 18°F / 10°C that your air temperature increases or decreases from 68°F / 20°C.

Valve Coil Resistance Specification

Description	Specification
Solenoid valve, 3 position 4 way, 10V DC (schematic items D, V and Y)	5 to 7Ω
Solenoid valve, 3 position 4 way, 10V DC (schematic item BB)	4 to 6Ω
Solenoid valve, 2 position 3 way, 10V DC (schematic items B, C, E, F and FF)	5 to 7Ω
Solenoid valve, 2 position 3 way, 10V DC (schematic items KK and LL)	5.5 to 7.5Ω
Proportional solenoid valve, 12V DC (schematic items M and T)	4 to 6Ω
Proportional solenoid valve, 12V DC (schematic item Q)	3.7 to 5.7Ω

How to Test a Coil Diode

Genie incorporates spike suppressing diodes in all of its directional valve coils except proportional valves and those coils with a metal case. Properly functioning coil diodes protect the electrical circuit by suppressing voltage spikes. Voltage spikes naturally occur within a function circuit following the interruption of electrical current to a coil. Faulty diodes can fail to protect the electrical system, resulting in a tripped circuit breaker or component damage.

WARNING Electrocution/burn hazard. Contact with electrically charged circuits could result in death or serious injury. Remove all rings, watches and other jewelry.

1 Test the coil for resistance. See, *How to Test a Coil.*

2 Connect a 10Ω resistor to the negative terminal of a known good 9V DC battery. Connect the other end of the resistor to a terminal on the coil.

Resistor, 10Ω	
Genie part number	27287

Note: The battery should read 9V DC or more when measured across the terminals.

3 Set a multimeter to read DC current.

Note: The multimeter, when set to read DC current, should be capable of reading up to 800 mA.

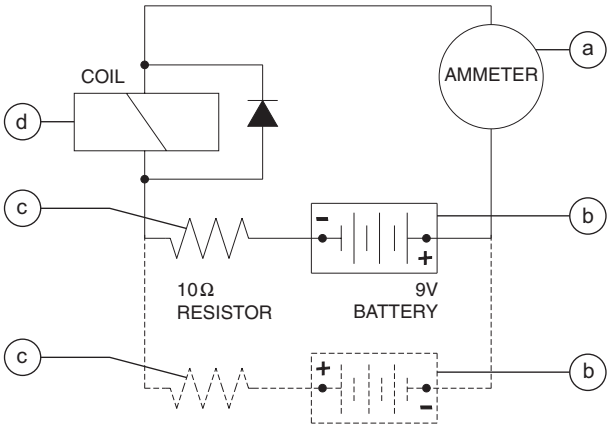

a multimeter
b 9V DC battery
c 10Ω resistor
d coil

Note: Dotted lines in illustration indicate a reversed connection as specified in step 6

4 Connect the negative lead to the other terminal on the coil.

Note: If testing a single-terminal coil, connect the negative lead to the internal metallic ring at either end of the coil.

5 Momentarily connect the positive lead from the multimeter to the positive terminal on the 9V DC battery. Note and record the current reading.

6 At the battery or coil terminals, reverse the connections. Note and record the current reading.

Result: Both current readings are greater than 0 mA and are different by a minimum of 20%. The coil is good.

Result: If one or both of the current readings are 0 mA, or if the two current readings do not differ by a minimum of 20%, the coil and/or its internal diode are faulty and the coil should be replaced.

Turntable Rotation Components

8-1 Turntable Rotation Assembly

How to Remove the Turntable Rotation Assembly

Note: When removing a hose assembly or fitting, the O-ring (if equipped) on the fitting and/or the hose end must be replaced. All connections must be torqued to specification during installation. Refer to Section 2, *Hydraulic Hose and Fitting Torque Specifications*.

Note: Perform this procedure with the machine on a firm and level surface.

1 Secure the turntable from rotating with the turntable rotation lock pin.

Note: The turntable rotation lock pin is located next to the boom rest pad.

2 Tag, disconnect and plug the hydraulic hoses from the turntable rotation drive motor. Cap the fittings on the drive motor.

WARNING Bodily injury hazard. Spraying hydraulic oil can penetrate and burn skin. Loosen hydraulic connections very slowly to allow the oil pressure to dissipate gradually. Do not allow oil to squirt or spray.

3 Loosen the backlash pivot plate and adjustment bolts.

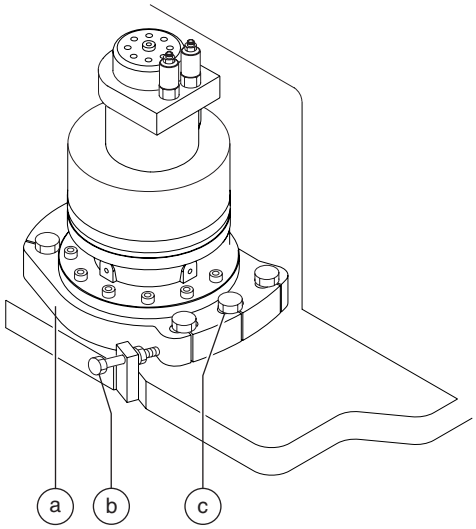

a backlash pivot plate
b adjustment bolt with lock nut
c backlash pivot plate mounting bolts

4 Attach a suitable lifting device to the lifting eyes on the drive hub assembly.

5 Remove the backlash pivot plate mounting bolts. Carefully remove the drive hub assembly from the machine.

WARNING Crushing hazard. The turntable could rotate unexpectedly when the rotation drive hub assembly is removed if the turntable is not secured with the turntable rotation lock pin.

WARNING Crushing hazard. The turntable rotation drive hub assembly could become unbalanced and fall when removed from the machine if not properly supported.

When installing the drive hub assembly:

6 Install the drive hub. Torque the back lash pivot plate to specification. Refer to Section 2, *Specifications*.

7 Adjust turntable rotation gear backlash. See *How to Adjust the Turntable Rotation Gear Backlash.*

How to Adjust the Turntable Rotation Gear Backlash

The turntable rotation drive hub is mounted on an adjustable plate that controls the gap between the rotation motor pinion gear and the turntable bearing ring gear.

Note: Perform this procedure with the boom between the non-steer end tires and with the machine on a firm and level surface.

1 Secure the turntable from rotating with the turntable rotation lock pin.

Note: The turntable rotation lock pin is located next to the boom rest pad.

2 Loosen the backlash pivot plate mounting fasteners.

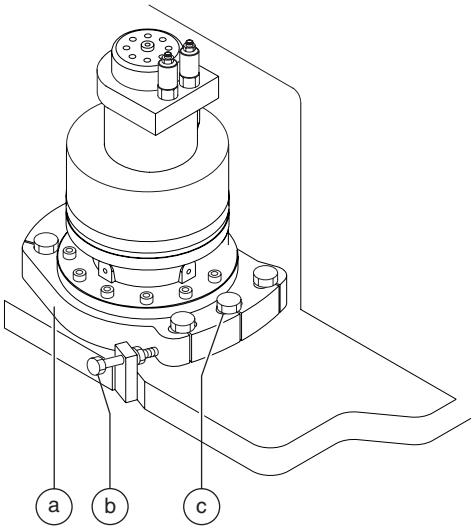

a backlash pivot plate
b adjustment bolt with lock nut
c backlash pivot plate mounting bolts

3 Push the backlash pivot plate towards the turntable as far as possible (this will push the rotation gear into the turntable bearing ring gear).

4 Loosen the lock nut on the adjustment bolt.

5 Turn the adjustment bolt clockwise until it contacts the backlash pivot plate.

6 Turn the adjustment bolt 1/2 turn counterclockwise. Tighten the lock nut on the adjustment bolt.

7 Rotate the backlash pivot plate away from the turntable until it contacts the adjustment bolt. Then torque the mounting fasteners on the backlash pivot plate to specification. Refer to Section 2, *Specifications*.

8 Rotate the turntable through an entire rotation. Check for tight spots that could cause binding. Readjust if necessary.

Axle Components

9-1 Oscillating Axle Cylinders

The oscillating axle cylinders extend and retract between the drive chassis and the axle to maintain a level chassis while driving over uneven terrain. The cylinders are equipped with counterbalance valves to prevent movement in the event of a hydraulic hose failure.

How to Remove an Oscillate Axle Cylinder

Note: Perform this procedure on firm, level surface with the boom in the stowed position.

Note: When removing a hose assembly or fitting, the O-ring (if equipped) on the fitting and/or the hose end must be replaced. All connections must be torqued to specification during installation. Refer to Section 2, *Hydraulic Hose and Fitting Torque Specifications*.

1 Rotate the turntable until the boom is between the steer tires.

2 Tag, disconnect and plug the oscillating axle cylinder hydraulic hoses. Cap the fittings on the cylinder.

WARNING Bodily injury hazard. Spraying hydraulic oil can penetrate and burn skin. Loosen hydraulic connections very slowly to allow the oil pressure to dissipate gradually. Do not allow oil to squirt or spray.

3 Remove the pin retaining fasteners from the rod-end pivot pin. Use a soft metal drift to remove the pin.

4 Attach a lifting strap from an overhead crane to the barrel end of the oscillating cylinder.

5 Remove the pin retaining fasteners from the barrel-end pivot pin. Use a soft metal drift to remove the pin.

6 Remove the cylinder from the machine.

WARNING Crushing hazard. The oscillate cylinder could become unbalanced and fall if not properly attached to the overhead crane when removed from the machine.

Fault Codes

Observe and Obey:

- ☑ Troubleshooting and repair procedures shall be completed by a person trained and qualified on the repair of this machine.
- ☑ Immediately tag and remove from service a damaged or malfunctioning machine.
- ☑ Repair any machine damage or malfunction before operating the machine.
- ☑ Unless otherwise specified, perform each repair procedure with the machine in the following configuration:
  - Machine parked on a firm, level surface
  - Boom in stowed position
  - Turntable rotated with the boom between the non-steer wheels
  - Turntable secured with the turntable rotation lock
  - Key switch in the off position with the key removed
  - Wheels chocked
  - All external AC power disconnected from the machine

Before Troubleshooting:

- ☑ Read, understand and obey the safety rules and operating instructions printed in the *Genie S-60 and S-65 Operator's Manual* or the *Genie S-60 HC Operator's Manual* on your machine.
- ☑ Be sure that all necessary tools and test equipment are available and ready for use.
- ☑ Read each appropiate fault code thoroughly. Attempting shortcuts may produce hazardous conditions.
- ☑ Be aware of the following hazards and follow generally accepted safe workshop practices.

⚠DANGER Crushing hazard. When testing or replacing any hydraulic component, always support the structure and secure it from movement.

⚠WARNING Electrocution/burn hazard. Contact with electrically charged circuits could result in death or serious injury. Remove all rings, watches and other jewelry.

⚠WARNING Bodily injury hazard. Spraying hydraulic oil can penetrate and burn skin. Loosen hydraulic connections very slowly to allow the oil pressure to dissipate gradually. Do not allow oil to squirt or spray.

Note: Perform all troubleshooting on a firm level surface.

Note: Two persons will be required to safely perform some troubleshooting procedures.

FAULT CODES

Fault Code Chart - Control System

How to Retrieve Control System Fault Codes

Note: At least one fault code is present when the alarm at the platform controls produces two short beeps every 30 seconds for 10 minutes.

Note: Perform this procedure with the engine off, the key switch turned to platform controls and the red Emergency Stop button pulled out to the on position at both the ground and platform controls.

1 Open the platform control box lid.

WARNING Electrocution/burn hazard. Contact with electrically charged circuits could result in death or serious injury. Remove all rings, watches and other jewelry.

2 Locate the red and yellow fault LEDs on the ALC-500 circuit board inside the platform control box. Do not touch the circuit board.

NOTICE Component damage hazard. Electrostatic discharge (ESD) can damage printed circuit board components. If the circuit board does need to be handled, maintain firm contact with a metal part of the machine that is grounded at all times when handling the printed circuit board OR use a grounded wrist strap.

3 **Determine the error source:** The red LED indicates the error source and will flash two separate codes. The first code will indicate the first digit of the two digit code, flashing once per second. It will then pause for 1.5 seconds and flash the second digit once per 0.5 second.

Note: When the red LED is flashing the code, the yellow LED will be on solid.

4 **Determine the error type:** The yellow LED indidates the error type and will flash two separate codes. The first code will indicate the first digit of the two digit code, flashing once per second. It will then pause for 1.5 seconds and flash the second digit once per 0.5 second.

Note: When the yellow LED is flashing the code, the red LED will be on solid.

5 Use the fault code table on the following pages to aid in troubleshooting the machine by pinpointing the area or component affected.

FAULT CODES

Error Source		Error Type		Condition	Solution
ID	Name	ID	Name		
21	Boom 1 Joystick (primary boom up/ down)	11 12 15 16	Value at 5V Value too high Value too low Value at 0V	Function is inoperative until joystick is calibrated. Alarm sounds indicating fault.	Cycle power off, then on and problem should be corrected.
		17	Not calibrated	Function is inoperative until joystick is calibrated.	Calibrate joystick
		18	Just calibrated	Initiate 1-second beep of alarm.	Self-clearing. (transient)
22	Boom 1 directional valves	21	Fault	Valve is operating outside of operational limits. Alarm sounds indicating fault.	Cycle power off, then on and problem should be corrected.
23	Boom 1 flow control valve	12 15	Value too high Value too low	Valve is operating outside of operational limits. Alarm sounds indicating fault.	Cycle power off, then on and problem should be corrected.
		17	Not calibrated	Normal function **except** threshold for one or both directions is zero.	Calibrate valve thresholds
		18	Just calibrated		Self-clearing. (transient)
31	Boom 2 Joystick (secondary boom up/down or primary boom extend/retract)	11 12 15 16	Value at 5V Value too high Value too low Value at 0V	Joystick is operating outside of operational limits. Alarm sounds indicating fault.	Cycle power off, then on and problem should be corrected.
		17	Not calibrated	Function is inoperative until joystick is calibrated.	Calibrate joystick
		18	Just calibrated	Initiate 1 second beep of alarm.	Self-clearing. (transient)
32	Boom 2 directional valves	21	Fault	Valve is operating outside of operational limits. Alarm sounds indicating fault.	Cycle power off, then on and problem should be corrected.

Continued on next page

FAULT CODES

Error Source		Error Type		Condition	Solution
ID	Name	ID	Name		
33	Boom 2 flow control valve	12 15	Value too high Value too low	Valve is operating outside of operational limits. Alarm sounds indicating fault.	Cycle power off, then on and problem should be corrected.
		17	Not calibrated	Normal function **except** threshold for one or both directions is zero.	Calibrate valve thresholds
		18	Just calibrated		Self-clearing. (transient)
41	Turntable rotate joystick	11 12 15 16	Value at 5V Value too high Value too low Value at 0V	Joystick is operating outside of operational limits. Alarm sounds indicating fault.	Cycle power off, then on and problem should be corrected.
		17	Not calibrated	Function is inoperative until joystick is calibrated.	Calibrate joystick
		18	Just calibrated	Initiate 1-second beep of alarm.	Self-clearing. (transient)
42	Turntable rotate directional valves	21	Fault	Valve is operating outside of operational limits. Alarm sounds indicating fault.	Cycle power off, then on and problem should be corrected.
43	Turntable rotate flow control valve	12 15	Value too high Value too low	Valve is operating outside of operational limits. Alarm sounds indicating fault.	Cycle power off, then on and problem should be corrected.
		17	Not calibrated	Normal function **except** threshold for one or both directions is zero.	Calibrate valve thresholds.
		18	Just calibrated		Self-clearing. (transient)
44	Drive enable toggle switch	21	Fault	Drive enable function is inoperative.	Cycle power off, then on and problem should be corrected.

FAULT CODES

Error Source		Error Type		Condition	Solution
ID	Name	ID	Name		
51	Drive joystick	11 12 15 16	Value at 5V Value too high Value too low Value at 0V	Limited speed and direction frozen at zero and neutral. Alarm sounds indicating fault.	Power up controller with problem corrected.
		17	Not calibrated	Joystick speed and direction frozen at zero and neutral.	Calibrate joystick
		18	Just calibrated	Initiate 1-second beep of alarm.	Self-clearing. (transient)
53	Drive flow valve (EDC)	12 15	Value too high Value too low	Limited speed and direction frozen at zero and neutral. Alarm sounds indicating fault.	Power up controller with problem corrected.
		17	Not calibrated	Normal function **except** threshold for one or both directions is zero.	Calibrate valve thresholds
		18	Just calibrated		Self-clearing. (transient)
54	Drive brake valve	21	Fault	Limited speed and direction frozen at zero and neutral. Alarm sounds indicating fault.	Power up controller with problem corrected.
55	High speed drive motor Valve	21	Fault	Motor speed frozen in the low state. Alarm sounds indicating fault.	Power up controller with problem corrected.
61	Steer joystick	11 12 15 16	Value at 5V Value too high Value too low Value at 0V	Limited speed and direction frozen at zero and neutral. Alarm sounds indicating fault.	Power up controller with problem corrected.
		17	Not calibrated	Joystick speed and direction frozen at zero and neutral.	Calibrate Joystick
		18	Just calibrated	Initiate 1-second beep of alarm.	Self-clearing. (transient)
62	Steer directional valves	21	Fault	Limited speed and direction frozen at zero and neutral. Alarm sounds indicating fault.	Power up controller with problem corrected.

FAULT CODES

Ford LRG-425 EFI Engine

How to Retrieve Ford Engine Fault Codes

The ECM constantly monitors the engine by the use of sensors on the engine. The ECM also uses signals from the sensors to initiate sequential fuel injection and make constant and instantaneous changes to ignition timing, fuel delivery and throttle position to maintain the engine's running condition at its highest efficiency while at the same time keeping exhaust emissions to a minimum. When a sensor fails or returns signals that are outside of set parameters, the ECM will store a fault code in memory that relates to the appropriate sensor and will turn on the Check Engine Light.

Note: Perform this procedure with the key switch in the off position.

1 Open the ground controls side cover and locate the run/test toggle switch on the side of the ground control box.

2 Pull out the red Emergency Stop button to the on position at both the ground and platform controls.

3 Quickly activate and release the start toggle switch/button. Do not start the engine.

4 Move and hold the run/test toggle switch to the test position.

⊙ Result: The check engine light should turn on. The check engine light should begin to blink.

5 Continue to hold the run/test toggle switch in the test position and count the blinks.

Note: Before the fault codes are displayed, the check engine light will blink a code 123 three times. After the fault codes, the check engine light will blink a code 123 three times again indicating the end of the stored codes.

Note: If any fault codes are present, the ECM will blink a three digit code three times for each code stored in memory. It will blink the first digit of a three digit code, pause, blink the second digit, pause, and then blink the third digit. For example: the check engine light blinks 5 consecutive times, blinks 3 times and then 1 time. That would indicate code 531.

Note: Once a fault code has been retrieved and the repair has been completed, the ECM memory must be reset to clear the fault code from the ECM. See *How to Clear Engine Fault Codes from the ECM.*

How to Clear Engine Fault Codes from the ECM

Note: Perform this procedure with the engine off and the key switch in the off position.

1 Open the engine side turntable cover and locate the battery.

2 Disconnect the negative battery cable from the battery for a minimum of 5 minutes.

⚠WARNING Electrocution/burn hazard. Contact with electrically charged circuits could result in death or serious injury. Remove all rings, watches and other jewelry.

3 Connect the negative battery cable to the battery.

FAULT CODES

Code	Problem	Cause	Solution
111	Closed Loop Multiplier High (LPG)	Heated Oxygen Sensor wiring and/or connections open or shorted OR sensor is faulty OR there are vacuum leaks or exhaust leaks.	Repair wiring and/or connections OR replace sensor OR repair vacuum and exhaust leaks.
112	HO2S Open/Inactive (Bank 1)	Heated Oxygen Sensor wiring and/or connections open or shorted OR sensor is faulty.	Repair wiring and/or connections OR replace sensor.
113	HO2S Open/Inactive (Bank 2)	Heated Oxygen Sensor wiring and/or connections open or shorted OR sensor is faulty.	
114	Post-cat oxygen sensor open	The post cat Heated Oxygen Sensor wiring and/or connections are open or shorted OR sensor is cold, non-responsive or inactive for 60 seconds or longer.	Repair wiring and/or connections OR replace the post cat oxygen sensor.
121	Closed Loop Multiplier High (Gasoline)	Heated Oxygen Sensor wiring and/or connections open or shorted OR sensor is faulty OR there are vacuum leaks or exhaust leaks OR fuel pressure is low OR the fuel injectors need cleaning or replacing.	Repair wiring and/or connections OR replace sensor OR repair any vacuum and exhaust leaks OR test the fuel pressure OR clean or replace the fuel injectors.
122	Closed Loop Multiplier Low (Gasoline)	MAP, IAT or ECT sensors not in correct position OR wiring and/or connections for sensors open or shorted OR sensor is faulty OR one or more fuel injectors are stuck open OR there is electro-magnetic interference from a faulty crankshaft and/or camshaft position sensor.	Adjust or replace sensors OR clean or repair fuel injectors.
124	Closed Loop Multiplier Low (LPG)	Heated Oxygen Sensor wiring and/or connections open or shorted OR sensor is faulty OR fuel quality is poor OR fuel system components may be faulty.	Repair wiring and/or connections OR replace sensor OR replace fuel OR test and repair the fuel system components.
133	Gasoline cat monitor	There are exhaust leaks OR the catalyst system efficiency is below the acceptable level.	Repair exhaust leaks OR there is an emissions compliance issue. Contact Ford Power Products for assistance.
134	LPG cat monitor		
135	NG cat monitor		
141	Adaptive Lean Fault - High Limit (Gasoline)	Heated Oxygen Sensor wiring and/or connections open or shorted OR sensor is faulty OR there are vacuum or exhaust leaks OR one or more fuel injectors faulty or stuck closed OR fuel quality is poor OR fuel pressure is too low.	Repair heated oxygen sensor wiring and/or connections OR replace sensor OR repair vacuum and exhaust leaks OR test the fuel pressure OR clean or replace the fuel injectors.
142	Adaptive Rich Fault - Low Limit (Gasoline)	MAP, IAT or ECT sensors not in correct position OR wiring and/or connections for sensors open or shorted OR sensor is faulty OR one or more fuel injectors are stuck closed OR there is electro-magnetic interference from a faulty crankshaft and/or camshaft position sensor.	Adjust or replace sensors OR clean or repair fuel injectors.
143	Adaptive Learn High (LPG)	Heated Oxygen Sensor wiring and/or connections open or shorted OR sensor is faulty OR there are vacuum leaks or exhaust leaks OR fuel quality is poor OR fuel system components may be faulty.	Repair wiring and/or connections OR replace sensor OR repair any vacuum and exhaust leaks OR replace fuel OR test and repair the fuel system components.
144	Adaptive Learn Low (LPG)	Engine wire harness may have an intermittent short to 5V DC or 12V DC OR fuel system components may be faulty.	Repair short in engine wire harness OR test and repair the fuel system components.

FAULT CODES

Code	Problem	Cause	Solution
161	System Voltage Low	Battery is faulty OR alternator is not charging OR battery supply wiring to ECM is open or shorted.	Replace battery OR repair alternator OR repair battery supply wiring to ECM.
162	System Voltage High	Alternator is overcharging the battery when engine RPM is greater than 1500 rpm.	Repair or replace the alternator.
211	IAT High Voltage	IAT sensor wiring and/or connections are open or shorted OR sensor is faulty OR engine intake air temperature is too cold.	Repair wiring and/or connections OR replace sensor OR direct warmer air into air intake.
212	IAT Low Voltage	IAT sensor wiring and/or connections are open or shorted OR sensor is faulty OR engine intake air temperature is too hot.	Repair wiring and/or connections OR replace sensor OR direct cooler air into air intake.
213	IAT Higher Than Expected (1)	Air intake temperature is greater than 200° F with the engine greater than 1000 rpm OR air intake system has leaks OR IAT sensor is faulty.	Check air intake system for damage and proper routing of air intake components OR replace the IAT sensor.
214	IAT Higher Than Expected (2)	Air intake temperature is greater than 210° F with the engine greater than 1000 rpm OR air intake system has leaks OR IAT sensor is faulty.	
215	Oil Pressure Low	Faulty oil pressure sensor OR sensor wiring and/or connections open or shorted OR engine oil level too low.	Replace oil pressure sensor OR repair sensor wiring and/or connections OR fill engine oil level to specification.
221	CHT/ECT High Voltage	Engine cooling system is malfunctioning OR sensor wires and/or connections open or shorted OR sensor is faulty.	Repair engine cooling system problems OR repair open or shorted wiring to sensor OR replace sensor.
222	CHT/ECT Low Voltage	Engine cooling system is malfunctioning and overheating the engine OR sensor wires and/or connections open or shorted OR sensor is faulty OR coolant level is low.	Repair engine cooling system problems OR repair open or shorted wiring to sensor OR replace sensor OR fill engine coolant level to specification.
223	CHT Higher Than Expected (1)	Coolant temperature at the cylinder head is 240° F. Engine cooling system is malfunctioning and overheating the engine OR sensor wires and/or connections open or shorted OR sensor is faulty OR coolant level is low.	
224	CHT Higher Than Expected (2)	Coolant temperature at the cylinder head is 250° F. Engine cooling system is malfunctioning and overheating the engine OR sensor wires and/or connections open or shorted OR sensor is faulty OR coolant level is low.	
231	MAP High Pressure	Open or shorted wiring and/or connections to MAP sensor OR sensor is faulty.	Repair wiring and/or connections to sensor OR replace MAP sensor.
232	MAP Low Voltage	Open or shorted wiring and/or connections to MAP sensor OR sensor is faulty.	
234	BP High Pressure	MAP sensor is faulty OR ECM is faulty.	Replace MAP sensor OR replace the ECM.
235	BP Low Pressure	MAP sensor is faulty OR ECM is faulty.	
242	Crank Sync Noise	Crankshaft position sensor wiring and/or connections open or shorted OR there is a poor system ground connection OR sensor is faulty.	Be sure system ground connections are in place and secure OR repair wiring and/or connections to sensor OR replace sensor.
243	Never Crank Synced At Start	Crankshaft position sensor wiring and/or connections open or shorted OR there is a poor system ground connection OR sensor is faulty.	
244	Camshaft Sensor Loss	Crankshaft position sensor wiring and/or connections open or shorted OR there is a poor system ground connection OR sensor is faulty.	

FAULT CODES

Code	Problem	Cause	Solution
245	Camshaft Sensor Noise	Camshaft position sensor wiring and/or connections open or shorted OR there is a poor system ground connection OR sensor is faulty.	Be sure system ground connections are in place and secure OR repair wiring and/or connections to sensor OR replace sensor.
253	Knock Sensor Open	Knock sensor wiring and/or connections open or shorted OR sensor is faulty.	Repair wiring and/or connections to knock sensor OR replace knock sensor.
254	Excessive Knock Signal	Knock sensor wiring and/or connections open or shorted OR there is excessive engine vibration OR sensor is faulty.	Check for excessive engine vibration OR repair wiring and/or connections to knock sensor OR replace knock sensor.
311	Injector Driver #1 Open	Open wiring and/or connections to fuel injector #1 OR fuel injector #1 is faulty OR ECM is faulty.	Repair wiring and/or connections to fuel injector #1 OR replace fuel injector #1 OR replace the ECM.
312	Injector Driver #1 Shorted	Wiring and/or connections to fuel injector #1 is shorted OR fuel injector #1 is faulty OR ECM is faulty.	
313	Injector Driver #2 Open	Open wiring and/or connections to fuel injector #2 OR fuel injector #2 is faulty OR ECM is faulty.	Repair wiring and/or connections to fuel injector #2 OR replace fuel injector #2 OR replace the ECM.
314	Injector Driver #2 Shorted	Wiring and/or connections to fuel injector #2 is shorted OR fuel injector #2 is faulty OR ECM is faulty.	
315	Injector Driver #3 Open	Open wiring and/or connections to fuel injector #3 OR fuel injector #3 is faulty OR ECM is faulty.	Repair wiring and/or connections to fuel injector #3 OR replace fuel injector #3 OR replace the ECM.
316	Injector Driver #3 Shorted	Wiring and/or connections to fuel injector #3 is shorted OR fuel injector #3 is faulty OR ECM is faulty.	
321	Injector Driver #4 Open	Open wiring and/or connections to fuel injector #4 OR fuel injector #4 is faulty OR ECM is faulty.	Repair wiring and/or connections to fuel injector #4 OR replace fuel injector #4 OR replace the ECM.
322	Injector Driver #4 Shorted	Wiring and/or connections to fuel injector #4 is shorted OR fuel injector #4 is faulty OR ECM is faulty.	
351	Fuel Pump Loop Open or High Side Short to Ground	Open wiring and/or connections to fuel pump OR fuel pump power shorted to ground OR fuel pump is faulty.	Repair wiring and/or connections to fuel pump OR replace fuel pump.
352	Fuel Pump High Side Shorted to Power	Wiring and/or connections to fuel pump shorted to power OR fuel pump is faulty.	
353	MegaJector Delivery Pressure Higher Than Expected	Fuel pressure too high OR LPG lockoff not opening completely OR the line between the MegaJector and carburetor is kinked or restricted or is leaking OR engine cooling system is not operating properly OR MegaJector is faulty.	Check fuel pressure OR repair LPG lockoff OR repair the line between the MegaJector and carburetor OR repair engine cooling system OR replace the MegaJector.
354	MegaJector Delivery Pressure Lower Than Expected	Fuel pressure too low OR LPG lockoff not opening completely OR the line between the MegaJector and carburetor is kinked or restricted or is leaking OR engine cooling system is not operating properly OR MegaJector is faulty.	
355	MegaJector Communication Lost	The ECM doesn't get any response from the MegaJector, or an incorrect response for 500ms period or longer.	Check CAN circuits for continuity and shorts to power or ground and for continuity and repair as necessary OR replace the MegaJector.
361	MegaJector Voltage Supply High	The MegaJector detects voltage greater than 18 volts for 5 seconds anytime the engine is cranking or running.	Repair charging system OR replace the MegaJector.
362	MegaJector Voltage Supply Low	The MegaJector detects voltage less than 9.5 volts for 5 seconds anytime the engine is cranking or running.	Repair VBAT power or ground circuit to ECM and MegaJector OR replace battery OR repair charging system OR replace the MegaJector.

FAULT CODES

Code	Problem	Cause	Solution
363	MegaJector Internal Actuator Fault Detection	The MegaJector detects an internal fault. Open or short in power, ground or CAN circuits.	Check Power, Ground and CAN circuits at MegaJector and all connections and repair as necessary OR MegaJector has an internal fault. Contact Ford Power Products for assistance.
364	MegaJector Internal Circuitry Fault Detection	The MegaJector detects an internal circuitry failure. Open or short in power, ground or CAN circuits.	
365	MegaJector Internal Communication Fault Detection	The MegaJector detects an internal communications failure. Open or short in power, ground or CAN circuits.	
411	Coil Driver #1 Open	Open wiring and/or connections to ignition coil #1 OR ignition coil #1 is faulty.	Repair wiring and/or connections to ignition coil #1 OR replace ignition coil #1.
412	Coil Driver #1 Shorted	Wiring and/or connections to ignition coil #1 shorted OR ignition coil #1 is faulty	
413	Coil Driver #2 Open	Open wiring and/or connections to ignition coil #2 OR ignition coil #2 is faulty.	Repair wiring and/or connections to ignition coil #2 OR replace ignition coil #2.
414	Coil Driver #2 Shorted	Wiring and/or connections to ignition coil #2 shorted OR ignition coil #2 is faulty	
511	FPP1 High Voltage	Not used.	If this fault appears on your machine, contact the Genie Industries Service Department.
512	FPP1 Low Voltage		
513	FPP1 Higher than IVS Limit		
514	FPP1 Lower than IVS Limit		
521	FPP2 High Voltage		
522	FPP2 High Voltage		
531	TPS1 (Signal Voltage) High	The #1 throttle position sensor wiring and/or connections open or shorted OR there is a poor system ground connection OR throttle position sensor #1 is faulty.	Be sure system ground connections are in place and secure OR repair wiring and/or connections to sensor OR replace throttle position sensor #1.
532	TPS1 (Signal Voltage) Low		
533	TPS2 (Signal Voltage) High	The #2 throttle position sensor wiring and/or connections open or shorted OR there is a poor system ground connection OR throttle position sensor #2 is faulty.	Be sure system ground connections are in place and secure OR repair wiring and/or connections to sensor OR replace throttle position sensor #2.
534	TPS2 (Signal Voltage) Low		
535	TPS1 Higher than TPS2	The throttle position sensor wiring and/or connections for either TPS1 or TPS2 open or shorted OR there is a poor system ground connection OR one or both throttle position sensors are faulty.	Be sure engine harness wiring and connections are in place and secure OR repair wiring and/or connections to one or both TPS sensors OR replace one or both TPS sensors.
536	TPS1 Lower than TPS2		
537	Throttle Unable to Open	Governor actuator is stuck closed OR wiring and/or connections open or shorted OR governor actuator is faulty.	Repair wiring and/or connections to governor actuator OR replace the governor actuator.
538	Throttle Unable to Close	Governor actuator is stuck open OR wiring and/or connections open or shorted OR governor actuator is faulty.	
545	Governor Interlock Failure	Engine harness wiring and/or connections open or shorted OR there is a poor system ground connection OR ECM is faulty.	Repair wiring and/or connections in engine harness OR replace the ECM.

FAULT CODES

Code	Problem	Cause	Solution
551	Max Governor Speed Override	ECM needs to be re-programmed OR throttle is sticking open OR there are air leaks between the throttle body and cylinder head.	Re-program ECM OR repair binding throttle operation OR repair any air leaks between the throttle body and cylinder head.
552	FPP1 Low Voltage		
553	FPP1 Higher than IVS Limit		
611	COP Failure	Loose wire connections to ECM OR ECM is faulty.	Locate and repair any engine harness wiring damage or shorts to ECM to be sure they are secure OR replace ECM.
612	Invalid Interrupt		
613	A/D Loss		
614	RTI 1 Loss		
615	Flash Checksum Invalid		
616	RAM Failure		
631	External 5V DC Ref Lower than Expected	Engine harness wiring and/or connections open or shorted to ground OR there is a faulty engine sensor OR ECM is faulty.	Locate and repair any engine harness wiring damage or shorts OR locate and troubleshoot or repair faulty engine sensor OR replace ECM.
632	External 5V DC Ref Higher than Expected		
655	RTI2 Loss	Loose wire connections to ECM OR ECM is faulty.	Locate and repair any engine harness wiring damage or shorts to ECM to be sure they are secure OR replace ECM.
656	RTI3 Loss		

FAULT CODES

Ford DSG-423 EFI Engine

How to Retrieve Ford Engine Fault Codes

The ECM constantly monitors the engine by the use of sensors on the engine. The ECM also uses signals from the sensors to initiate sequential fuel injection and make constant and instantaneous changes to ignition timing, fuel delivery and throttle position to maintain the engine's running condition at its highest efficiency while at the same time keeping exhaust emissions to a minimum. When a sensor fails or returns signals that are outside of set parameters, the ECM will store a fault code in memory that relates to the appropriate sensor and will turn on the Check Engine Light.

Note: Perform this procedure with the key switch in the off position.

1 Open the ground controls side cover and locate the run/test toggle switch on the side of the ground control box.

2 Pull out the red Emergency Stop button to the on position at both the ground and platform controls.

3 Quickly activate and release the start toggle switch/button. Do not start the engine.

4 Move and hold the run/test toggle switch to the test position.

⊙ Result: The check engine light should turn on. The check engine light should begin to blink.

5 Continue to hold the run/test toggle switch in the test position and count the blinks.

Note: Before the fault codes are displayed, the check engine light will blink a code 123 three times. After the fault codes, the check engine light will blink a code 123 three times again indicating the end of the stored codes.

Note: If any fault codes are present, the ECM will blink a three digit code three times for each code stored in memory. It will blink the first digit of a three digit code, pause, blink the second digit, pause, and then blink the third digit. For example: the check engine light blinks 5 consecutive times, blinks 3 times and then 1 time. That would indicate code 531.

Note: Once a fault code has been retrieved and the repair has been completed, the ECM memory must be reset to clear the fault code from the ECM. See *How to Clear Engine Fault Codes from the ECM.*

How to Clear Engine Fault Codes from the ECM

Note: Perform this procedure with the engine off and the key switch in the off position.

1 Open the engine side turntable cover and locate the battery.

2 Disconnect the negative battery cable from the battery for a minimum of 5 minutes.

⚠WARNING Electrocution/burn hazard. Contact with electrically charged circuits could result in death or serious injury. Remove all rings, watches and other jewelry.

3 Connect the negative battery cable to the battery.

FAULT CODES

Code	Description
111	CL (closed loop) high LPG
112	EGO open / lazy pre-cat 1
113	EGO open / lazy pre-cat 2/post-cat 1
114	EGO open / lazy post-cat 1
115	EGO open / lazy post-cat 2
121	CL (closed loop) high gasoline bank 1
122	CL (closed loop) low gasoline bank 1
124	CL (closed loop) low LPG
133	Gasoline catalyst monitor 1
134	LPG catalyst monitor
141	AL (adaptive learning) high gasoline bank 1
142	AL (adaptive learning) low gasoline bank 1
143	AL (adaptive learning) high LPG
144	AL (adaptive learning) low LPG
161	Battery voltage high
162	Battery voltage low
163	AUX analog PD1 high
164	AUX analog PD1 low
165	AUX analog PU3 high
166	AUX analog PU3 low
167	AUX analog PUD1 high
168	AUX analog PUD1 low
171	AUX analog PUD2 high
172	AUX analog PUD2 low
173	AUX analog PUD3 high
174	AUX analog PUD3 low
181	AUX DIG1 high
182	AUX DIG1 low
183	AUX DIG2 high
184	AUX DIG2 low
185	AUX DIG3 high
186	AUX DIG3 low
211	IAT (intake air temperature) high voltage

Code	Description
212	IAT (intake air temperature) low voltage
213	IAT (intake air temperature) higher than expected 1
214	IAT (intake air temperature) higher than expected 2
215	Oil pressure low
221	ECT/CHT (engine/cylinder head temp) high voltage
222	ECT/CHT (engine/cylinder head temp) low voltage
223	CHT higher than expected 1
224	CHT higher than expected 2
225	ECT higher than expected 1
226	ECT higher than expected 2
231	MAP (manifold absolute pressure) high pressure
232	MAP (manifold absolute pressure) low pressure
234	BP (barometric pressure) high pressure
235	BP (barometric pressure) low pressure
242	Crank sync noise
243	Never crank synced at start
244	Cam loss
245	Cam sync noise
246	Crank loss
253	Knock 1-2 sensor open 1
254	Knock 1-2 excessive signal 1

FAULT CODES

Code	Description
261	FP (fuel pressure) high voltage
262	FP (fuel pressure) low voltage
271	FT (fuel temperature) gasoline high voltage
272	FT (fuel temperature) gasoline low voltage
273	FT (fuel temperature) gaseous fuel high voltage
274	FT (fuel temperature) gaseous fuel low voltage
311	Injector loop open OR low-side short to ground 1
312	Injector coil shorted 1
313	Injector loop open OR low-side short to ground 2
314	Injector coil shorted 2
315	Injector loop open OR low-side short to ground 3
316	Injector coil shorted 3
321	Injector loop open OR low-side short to ground 4
322	Injector coil shorted 4
351	FPump motor loop open OR high-side shorted to ground
352	Fpump motor high-side shorted to power
353	EPR delivery pressure higher than expected
354	EPR delivery pressure lower than expected
355	EPR comm lost
359	Fuel run-out longer than expected
361	EPR voltage supply high
362	EPR voltage supply low
363	EPR internal actuator fault detection
364	EPR internal circuitry fault detection
365	EPR internal comm fault detection
411	Primary loop open OR low-side short to ground 1
412	Primary coil shorted 1
413	Primary loop open OR low-side short to ground 2
414	Primary coil shorted 2
415	Primary loop open OR low-side short to ground 3
416	Primary coil shorted 3
421	Primary loop open OR low-side short to ground 4
422	Primary coil shorted 4

Code	Description
531	TPS1 (throttle position sensor) high voltage
532	TPS1 (throttle position sensor) low voltage
533	TPS2 (throttle position sensor) high voltage
534	TPS2 (throttle position sensor) low voltage
535	TPS1 (throttle position sensor) higher than TPS2
536	TPS1 (throttle position sensor) lower than TPS2
537	Unable to reach higher TPS (throttle position sensor)
538	Unable to reach lower TPS (throttle position sensor)
539	TPS 1-2 simultaneous voltages
541	AUX analog PU1 high
542	AUX analog PU1 low
543	AUX analog PU2 high
544	AUX analog PU2 low
551	Max govern speed override
552	Fuel rev limit
553	Spark rev limit
611	COP failure
612	Invalid interrupt
613	A/D loss
614	RTI 1 loss
615	Flash checksum invalid

FAULT CODES

Code	Description
616	RAM failure
631	5VE1 low voltage
632	5VE1 high voltage
633	5VE2 high voltage
634	5VE2 low voltage
635	5VE1-5VE2 simultaneous out-of-range
641	Rx inactive
642	Rx noise
643	Invalid packet format
644	Shutdown request
646	CAN Tx failure
647	CAN Rx failure
648	CAN address conflict failure
655	RTI 2 loss
656	RTI 3 loss
711	Relay control ground short
712	Relay coil open
713	Relay coil short to power
714	Fpump relay control ground short
715	Fpump relay coil open
716	Fpump relay coil short to power
721	Start relay control ground short
722	Start relay coil open
723	Start relay coil short to power
731	PWM1-gauge1 open / ground short
732	PWM1-gauge1 short to power
733	PWM2-gauge2 open / ground short
734	PWM2-gauge2 short to power
735	PWM3-gauge3 open / ground short
736	PWM3-gauge3 short to power
741	PWM4 open / ground short
742	PWM4 short to power
743	PWM5 open / ground short

Code	Description
744	PWM5 short to power
761	MIL (malfunction indicator light) control ground short
762	MIL (malfunction indicator light) open
763	MIL (malfunction indicator light) control short to power
771	Tach output ground short
772	Tach output short to power
1629	J1939 TSC1 message receipt lost
1630	J1939 ETC message receipt lost

For further engine fault code troubleshooting and diagnostic information, refer to the *Ford DSG-423 EFI Service Manual* (EDI part number 1060040). Genie part number 119494.

Ford DSG 423 EFI Operator Handbook
Genie part number 119488

FAULT CODES

Platform Load Sense System, S-60 HC

How to Retrieve Platform Load Sense System Fault Codes

Note: Perform this procedure with the engine off, the key switch turned to ground controls and the red Emergency Stop buttons pulled out to the on position at both the ground and platform controls.

1 Open the ground controls side turntable cover.

2 Locate the operational and safety controllers near the ground control box.

3 Determine whether a safety or operational fault exists by visually inspecting which controller has flashing LEDs.

Note: If the LEDs are flashing on both controllers, determine the fault code on one controller at a time.

4 **Determine the error source:** The red LED indicates the error source and will flash two separate codes. The first code will indicate the first digit of the two digit code, flashing once per second. It will then pause for 1.5 seconds and flash the second digit once per 0.5 second.

5 **Determine the error type:** The green LED indicates the error type and will flash two separate codes. The first code will indicate the first digit of the two digit code, flashing once per second. It will then pause for 1.5 seconds and flash the second digit once per 0.5 second.

6 Use the fault code table on the following pages to aid in troubleshooting the machine by pinpointing the area or component affected.

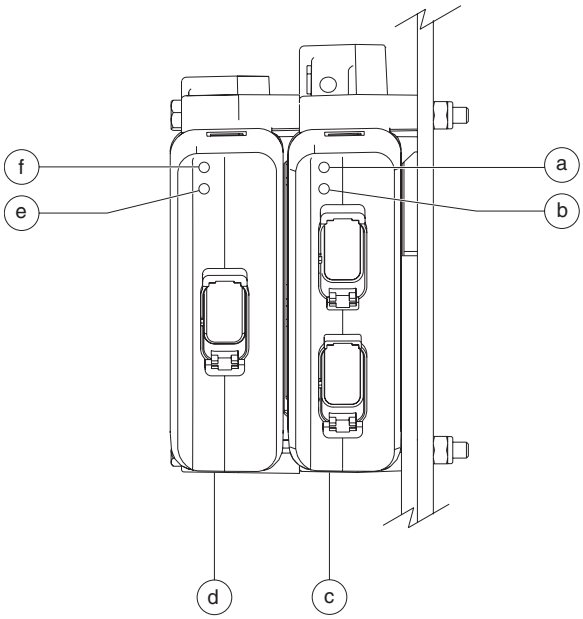

a green LED (operational control module)
b red LED (operational control module)
c operational control module
d safety control module
e red LED (safety control module)
f green LED (safety control module)

FAULT CODES

Error Source		Error Type		Condition	Solution
ID	Name	ID	Name		
12	System Checks	11	Safety envelope reached	Power relays disengaged.	Use recovery switch and APU from the ground controls to recover the machine to stowed position or within the operating envelope.
		12	Platform load greater than 1250 pounds	Power relays disengaged.	Remove weight from platform until load is 1200 lbs / 544 kg or less.
		13	CAN communication failure	Power relays disengaged.	Repair CAN bus wiring and/or connections.
		14	Sensor power failure	Power relays disengaged.	Use recovery switch and APU from the ground controls to recover the machine to stowed position or within the operating envelope.
		21	Angle sensor not active	Power relays disengaged.	Inspect boom angle sensor for proper operation and be sure it is connected to boom properly OR replace boom angle sensor.
		22	String potentiometer not active	Power relays disengaged.	Inspect string potentiometer for proper operation and be sure it is connected to boom properly OR replace string potentiometer.
		23	Power relay output short high	Power relays disengaged. Relay wiring open or shorted to voltage.	Repair system wiring and/or connections.
		24	Power relay output short low	Power relays disengaged. Relay wiring open or shorted to ground.	Repair system wiring and/or connections.
		25	Directional relay output short high	Boom up/down and extend/retract inoperative. Relay wiring open or shorted to voltage.	Repair system wiring and/or connections.
		26	Output short low	Boom up/down and extend/retract inoperative. Relay wiring open or shorted to ground.	Repair system wiring and/or connections.

FAULT CODES

Error Source		Error Type		Condition	Solution
ID	Name	ID	Name		
21	String Potentiometer Operational sensor (C167PSL)	5	Sensor tolerance fault	Power relays disengaged.	Repair wiring and/or connections OR replace string potentiometer and calibrate overload system.
		11	Output short high	Power relays disengaged. String potentiometer wiring open or shorted to voltage.	Repair wiring and/or connections OR replace string potentiometer and calibrate overload system.
		12	Value too high	Power relays disengaged. String potentiometer wiring open or shorted to voltage.	Repair wiring and/or connections OR replace string potentiometer and calibrate overload system.
		15	Value too low	Power relays disengaged. String potentiometer wiring open or shorted to ground.	Repair wiring and/or connections OR replace string potentiometer and calibrate overload system.
		16	Output short low	Power relays disengaged. String potentiometer wiring open or shorted to ground.	Repair wiring and/or connections OR replace string potentiometer and calibrate overload system.
		17	Not calibrated	Boom range of motion is limited.	Calibrate the platform load sense system.
		18	Just calibrated	used to clear diagnostic	Self-clearing.

FAULT CODES

Error Source		Error Type		Condition	Solution
ID	Name	ID	Name		
22	String Potentiometer Safety Sensor (C166PSL)	5	Sensor tolerance fault	Power relays disengaged	Repair wiring and/or connections OR replace string potentiometer and calibrate overload system.
		11	Output short high	Power relays disengaged. String potentiometer wiring open or shorted to voltage.	Repair wiring and/or connections OR replace string potentiometer and calibrate overload system.
		12	Value too high	Power relays disengaged. String potentiometer wiring open or shorted to voltage.	Repair wiring and/or connections OR replace string potentiometer and calibrate overload system.
		15	Value too low	Power relays disengaged. String potentiometer wiring open or shorted to ground OR string potentiometer is faulty.	Repair wiring and/or connections OR replace string potentiometer and calibrate overload system.
		16	Output short low	Power relays disengaged. String potentiometer wiring open or shorted to ground.	Repair wiring and/or connections OR replace string potentiometer and calibrate overload system.
		17	Not calibrated	Boom range of motion is limited.	Calibrate the platform load sense system.
		18	Just calibrated	Used to clear diagnostic codes.	Self-clearing.
		21	Inconsistent	Checks operational and safety sensor values against each other.	Repair wiring and/or connections OR replace string potentiometer and calibrate overload system.

FAULT CODES

Error Source		Error Type		Condition	Solution
ID	Name	ID	Name		
31	Boom Angle Operational Sensor (C123PBS)	5	Sensor tolerance fault	Power relays disengaged.	Repair wiring and/or connections OR replace boom angle sensor and calibrate overload system.
		11	Output short high	Power relays disengaged. Boom angle sensor wiring open or shorted to voltage.	Repair wiring and/or connections OR replace boom angle sensor and calibrate overload system.
		12	Value too high	Power relays disengaged. Boom angle sensor wiring open or shorted to voltage OR sensor is out of operating range.	Repair wiring and/or connections OR adjust or replace boom angle sensor and calibrate overload system.
		15	Value too low	Power relays disengaged. Boom angle sensor wiring open or shorted to ground OR sensor is out of operating range.	Repair wiring and/or connections OR adjust or replace boom angle sensor and calibrate overload system.
		16	Output short low	Power relays disengaged. Boom angle sensor wiring open or shorted to ground.	Repair wiring and/or connections OR replace boom angle sensor and calibrate overload system.
		17	Not calibrated	Boom range of motion is limited.	Calibrate the platform load sense system.
		18	Just calibrated	Used to clear diagnostic codes.	Self-clearing.

FAULT CODES

Error Source		Error Type		Condition	Solution
ID	Name	ID	Name		
32	Boom Angle Safety Sensor (C141PBS)	5	Sensor tolerance fault	Power relays disengaged.	Repair wiring and/or connections OR replace boom angle sensor and calibrate overload system.
		11	Output short high	Power relays disengaged. Boom angle sensor wiring open or shorted to voltage.	Repair wiring and/or connections OR replace boom angle sensor and calibrate overload system.
		12	Value too high	Power relays disengaged. Boom angle sensor wiring open or shorted to voltage OR sensor is out of operating range.	Repair wiring and/or connections OR adjust or replace boom angle sensor and calibrate overload system.
		15	Value too low	Power relays disengaged. Boom angle sensor wiring open or shorted to ground OR sensor is out of operating range.	Repair wiring and/or connections OR adjust or replace boom angle sensor and calibrate overload system.
		16	Output short low	Power relays disengaged. Boom angle sensor wiring open or shorted to ground.	Repair wiring and/or connections OR replace boom angle sensor and calibrate overload system.
		17	Not calibrated	Boom range of motion is limited.	Calibrate the platform load sense system.
		18	Just calibrated	Used to clear diagnostic codes.	Self-clearing.
		21	Inconsistent	Checks operational and safety sensor values against each other.	Repair wiring and/or connections OR replace boom angle sensor and calibrate overload system.

FAULT CODES

Error Source		Error Type		Condition	Solution
ID	Name	ID	Name		
41	Load Cell Operational (C175LDS)	5	Sensor tolerance fault	Power relays disengaged.	Repair wiring and/or connections OR replace platform load cell and calibrate overload system.
		11	Output short high	Power relays disengaged. Load cell wiring open or shorted to voltage.	Repair wiring and/or connections OR replace platform load cell and calibrate overload system.
		12	Value too high	Power relays disengaged. Load cell wiring open or shorted to voltage. Platform may be overloaded.	Repair wiring and/or connections OR replace platform load cell and calibrate overload system OR remove excess weight from platform.
		15	Value too low	Power relays disengaged. Load cell wiring open or shorted to ground. Platform may be reverse loaded.	Repair wiring and/or connections OR replace platform load cell and calibrate overload system. Check for binding of the overload component linkage and be sure platform is not touching the ground or being supported from underneath.
		16	Output short low	Power relays disengaged. Load cell wiring open or shorted to ground.	Repair wiring and/or connections OR replace platform load cell and calibrate overload system.
		17	Not calibrated	Boom range of motion is limited.	Calibrate the platform load sense system.
		18	Just calibrated	Used to clear diagnostic codes.	Self-clearing.

FAULT CODES

Error Source		Error Type		Condition	Solution
ID	Name	ID	Name		
42	Load Cell Safety (C94LDS)	5	Sensor tolerance fault	Power relays disengaged.	Repair wiring and/or connections OR replace platform load cell and calibrate overload system.
		11	Output short high	Power relays disengaged. Load cell wiring open or shorted to voltage.	Repair wiring and/or connections OR replace platform load cell and calibrate overload system.
		12	Value too high	Power relays disengaged. Load cell wiring open or shorted to voltage. Platform may be overloaded.	Repair wiring and/or connections OR replace platform load cell and calibrate overload system OR remove excess weight from platform.
		15	Value too low	Power relays disengaged. Load cell wiring open or shorted to ground. Platform may be reverse loaded.	Repair wiring and/or connections OR replace platform load cell and calibrate overload system. Check for binding of the overload component linkage and be sure platform is not touching the ground or being supported from underneath.
		16	Output short low	Power relays disengaged. Load cell wiring open or shorted to ground.	Repair wiring and/or connections OR replace platform load cell and calibrate overload system.
		17	Not calibrated	Boom range of motion is limited.	Calibrate the platform load sense system.
		18	Just calibrated	Used to clear diagnostic codes.	Self-clearing.
		21	Inconsistent	Checks operational and safety sensor values against each other.	Repair wiring and/or connections OR replace platform load cell and calibrate overload system.

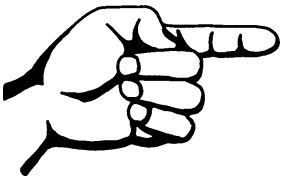

This page intentionally left blank.

Schematics

Observe and Obey:

- ☑ Troubleshooting and repair procedures shall be completed by a person trained and qualified on the repair of this machine.
- ☑ Immediately tag and remove from service a damaged or malfunctioning machine.
- ☑ Repair any machine damage or malfunction before operating the machine.

Before Troubleshooting:

- ☑ Read, understand and obey the safety rules and operating instructions in the appropriate Operator's Manual on your machine.
- ☑ Be sure that all necessary tools and test equipment are available and ready for use.

About This Section

There are two groups of schematics in this section.

Electrical Schematics

⚠WARNING Electrocution/burn hazard. Contact with electrically charged circuits could result in death or serious injury. Remove all rings, watches and other jewelry.

Hydraulic Schematics

⚠WARNING Bodily injury hazard. Spraying hydraulic oil can penetrate and burn skin. Loosen hydraulic connections very slowly to allow the oil pressure to dissipate gradually. Do not allow oil to squirt or spray.

General Repair Process

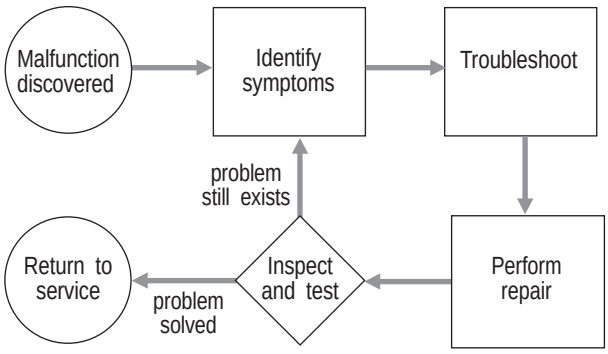

Electrical Symbols Legend

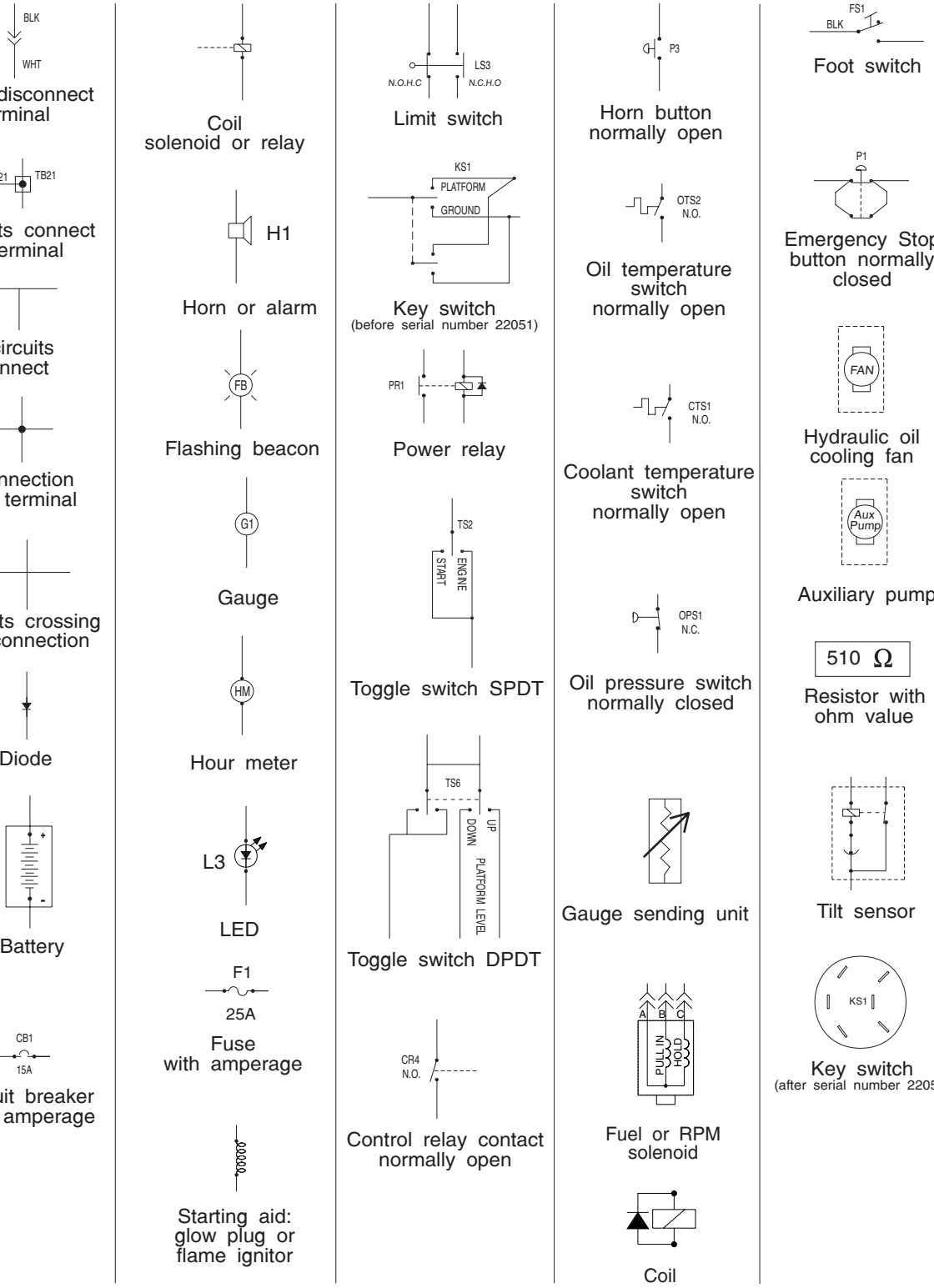

Hydraulic Symbols Legend

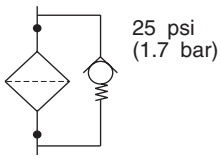

Filter with bypass valve relief setting

Pump fixed displacement

Pump bi-directional, variable displacement

Motor bi-directional

Motor 2-speed, bi-directional

Pump prime mover (engine or motor)

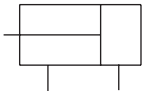

Double acting cylinder

Orifice with size

Check valve

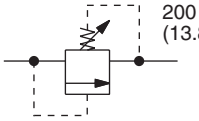

Relief valve with pressure setting

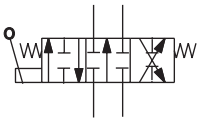

Directional valve (mechanically activated)

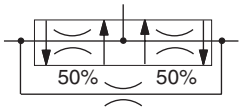

Flow divider/combiner valve with pressure balancing orifice and flow percentages

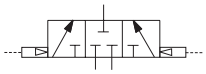

Pilot operated 3 position, 3 way, shuttle valve

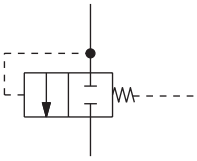

Differential sensing valve

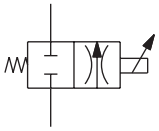

Solenoid operated proportional valve

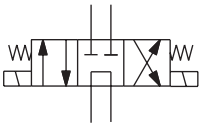

Solenoid operated 3 position, 4 way, directional valve

Priority flow regulator valve

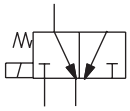

Solenoid operated 2 position, 3 way, directional valve

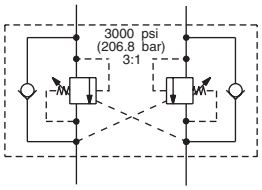

Counterbalance valve with pressure and pilot ratio

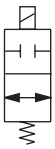

2 position, 2 way solenoid valve

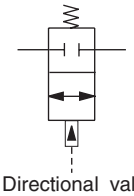

Directional valve pilot operated 2 position, 2 way

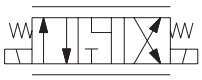

Solenoid operated 3 position, 4 way, proportional directional valve

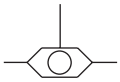

2 position, 3 way, shuttle valve

Brake

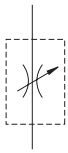

Needle valve

Shut off valve

Ford Engine Relay Layout

Ford LRG-425 EFI (before serial number 14054)

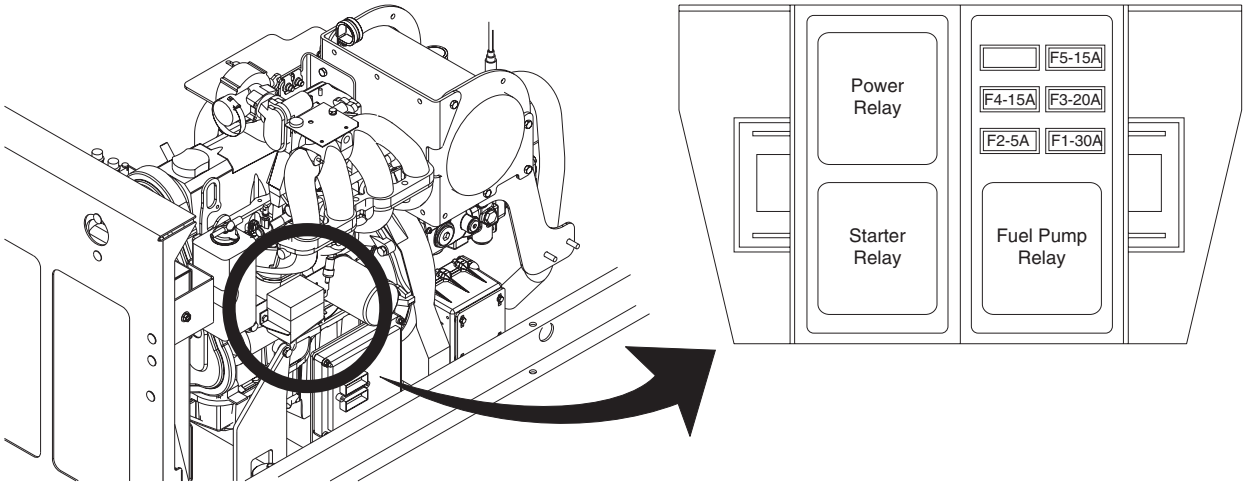

Ford DSG-423 EFI (after serial number 14053)

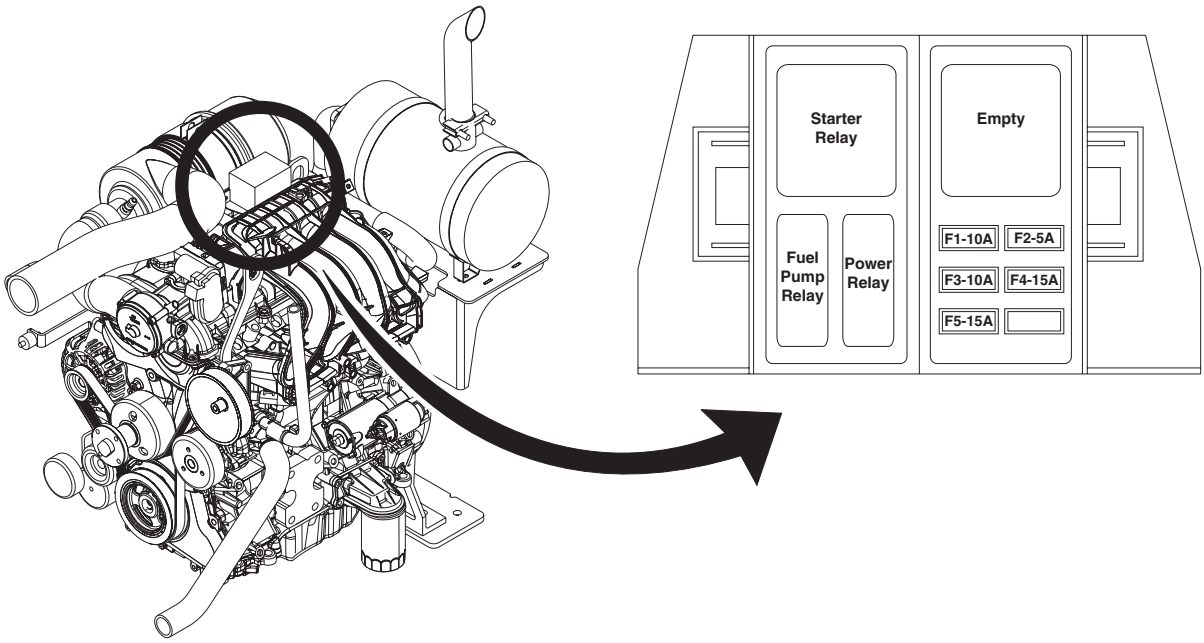

Limit Switch Location Legend

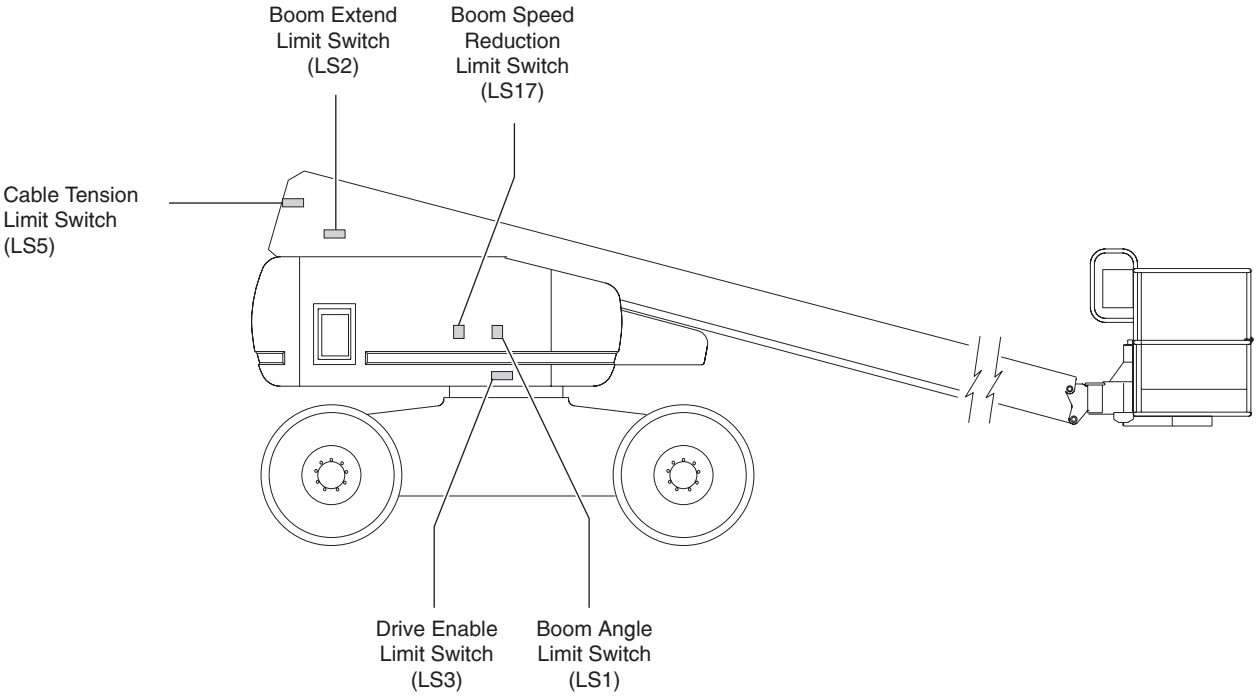

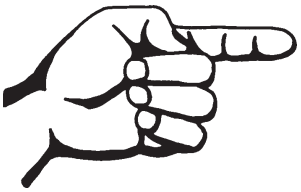

Electrical Schematic, S-60 HC
(from serial number 12800)

Electrical Schematic, S-60 HC
(from serial number 12800)

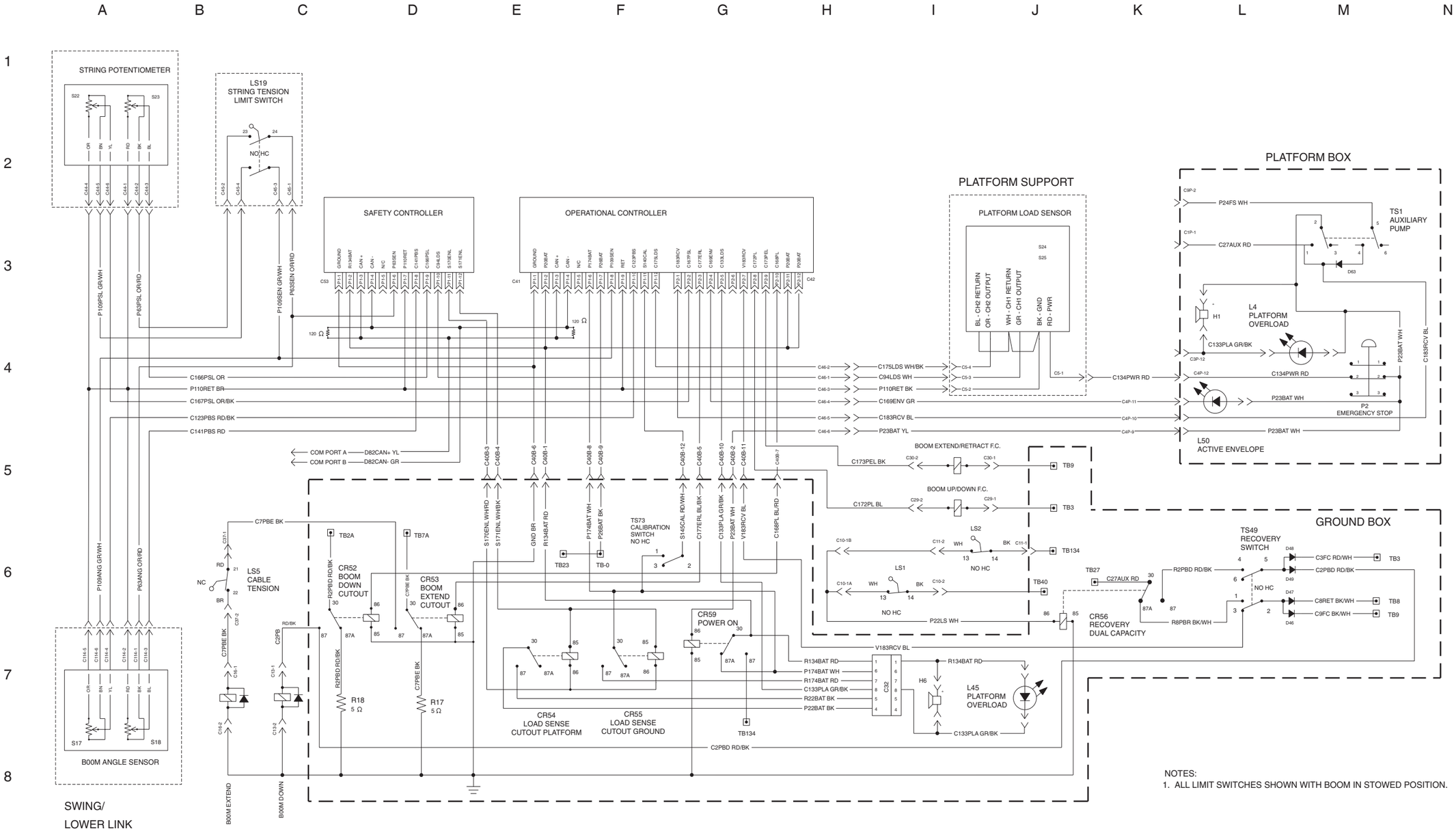

NOTES:
1. ALL LIMIT SWITCHES SHOWN WITH BOOM IN STOWED POSITION.

Chassis Wiring Diagram, S-60 HC
(from serial number 12800)

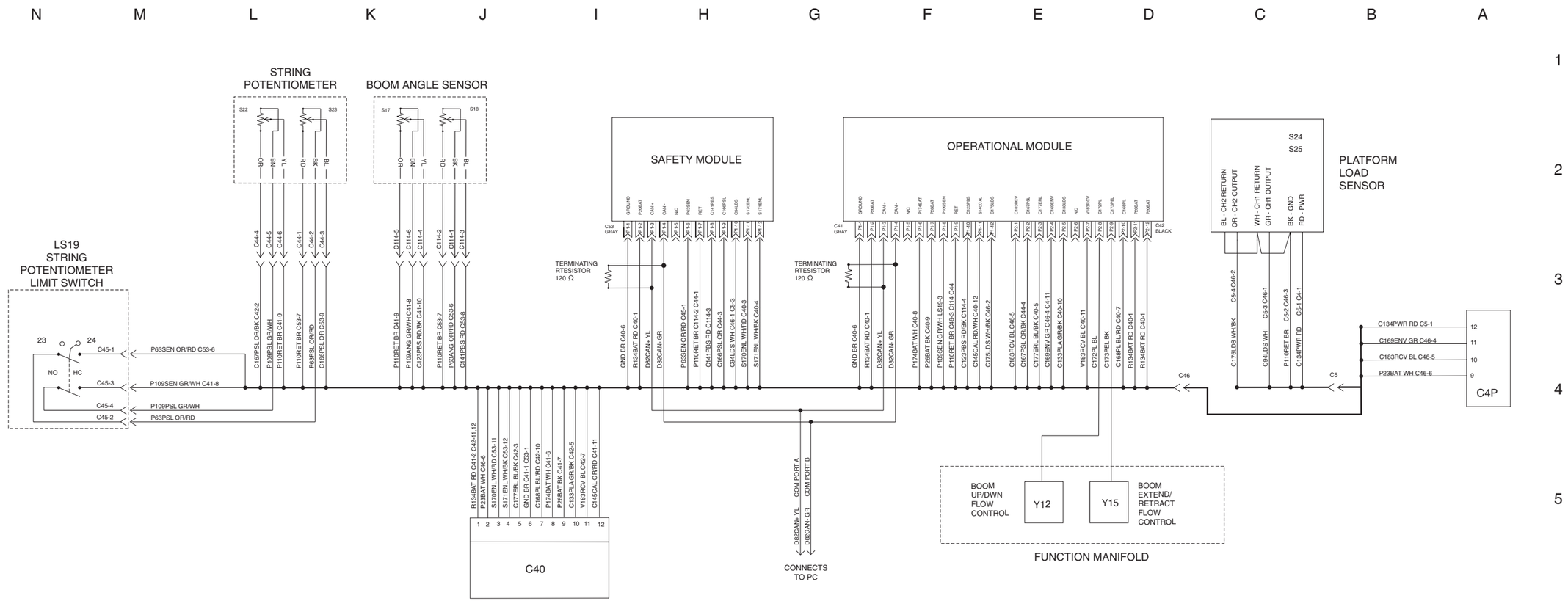

Chassis Wiring Diagram, S-60 HC
(from serial number 12800)

Ground Control Box Terminal Strip Wiring Diagram, S-60 HC
(from serial number 12800)

Ground Control Box Terminal Strip Wiring Diagram, S-60 HC

(from serial number 12800)

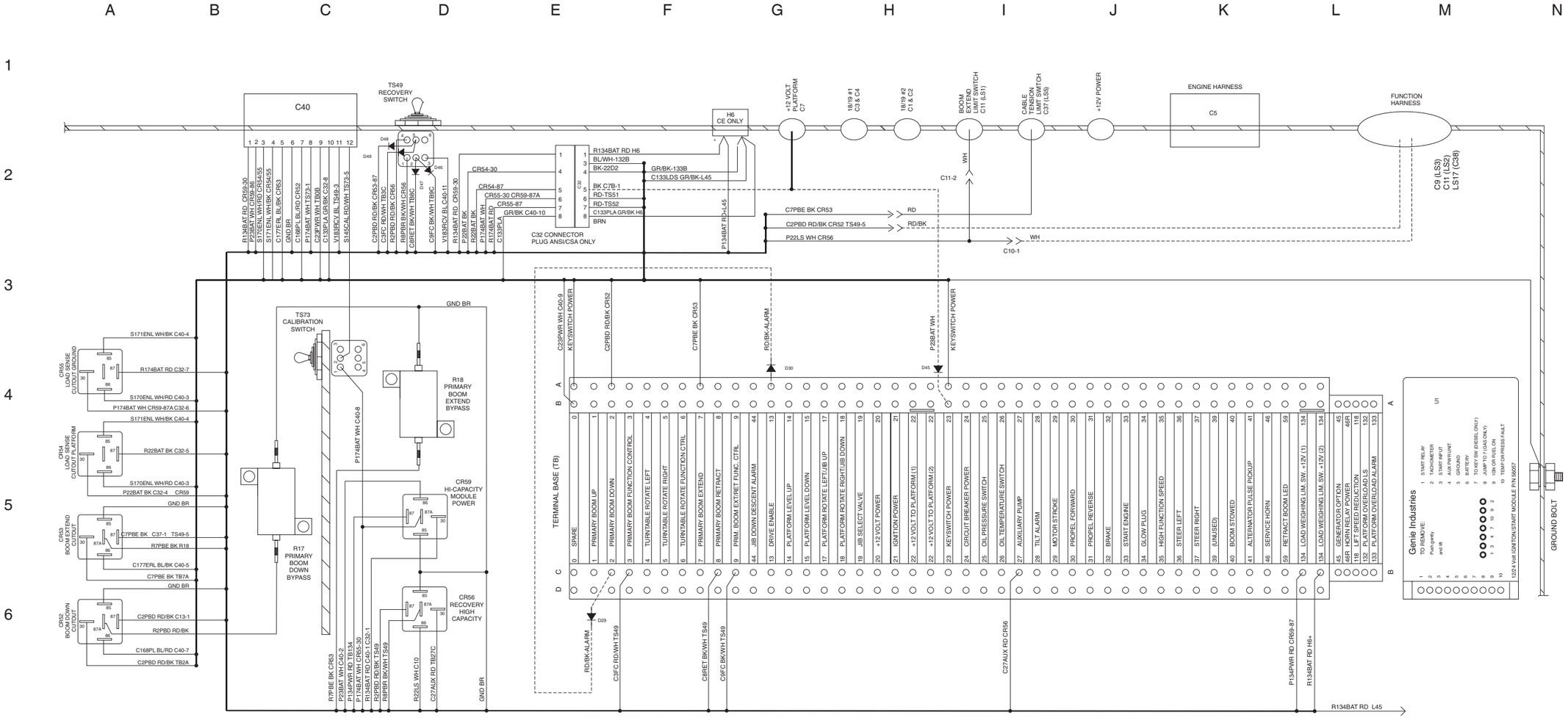

Platform Control Box Wiring Diagram, S-60 HC
(from serial number 12800)

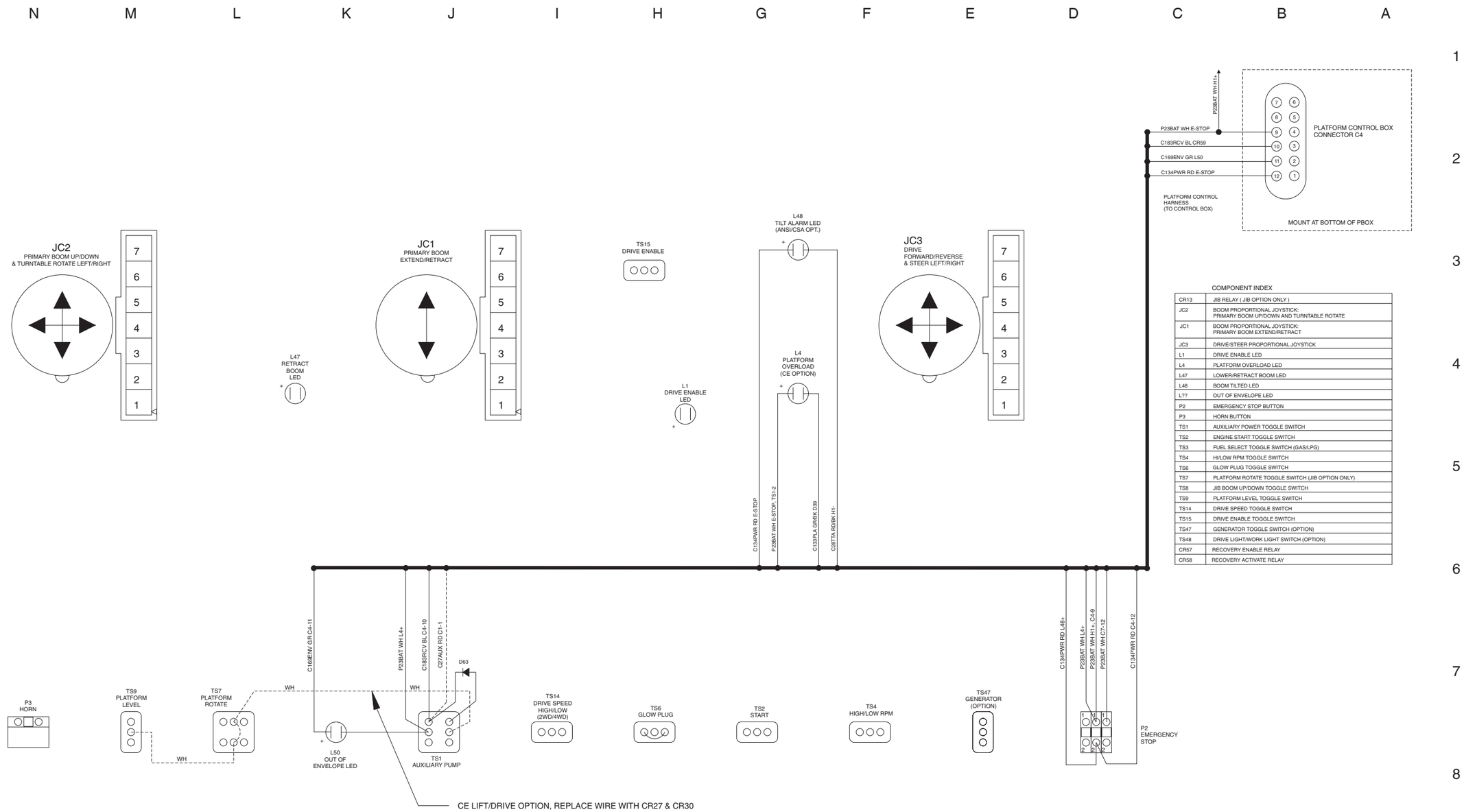

COMPONENT INDEX

CR13	JIB RELAY (JIB OPTION ONLY)
JC2	BOOM PROPORTIONAL JOYSTICK: PRIMARY BOOM UP/DOWN AND TURNTABLE ROTATE
JC1	BOOM PROPORTIONAL JOYSTICK: PRIMARY BOOM EXTEND/RETRACT
JC3	DRIVE/STEER PROPORTIONAL JOYSTICK
L1	DRIVE ENABLE LED
L4	PLATFORM OVERLOAD LED
L47	LOWER/RETRACT BOOM LED
L48	BOOM TILTED LED
L??	OUT OF ENVELOPE LED
P2	EMERGENCY STOP BUTTON
P3	HORN BUTTON
TS1	AUXILIARY POWER TOGGLE SWITCH
TS2	ENGINE START TOGGLE SWITCH
TS3	FUEL SELECT TOGGLE SWITCH (GAS/LPG)
TS4	HI/LOW RPM TOGGLE SWITCH
TS6	GLOW PLUG TOGGLE SWITCH
TS7	PLATFORM ROTATE TOGGLE SWITCH (JIB OPTION ONLY)
TS8	JIB BOOM UP/DOWN TOGGLE SWITCH
TS9	PLATFORM LEVEL TOGGLE SWITCH
TS14	DRIVE SPEED TOGGLE SWITCH
TS15	DRIVE ENABLE TOGGLE SWITCH
TS47	GENERATOR TOGGLE SWITCH (OPTION)
TS48	DRIVE LIGHT/WORK LIGHT SWITCH (OPTION)
CR57	RECOVERY ENABLE RELAY
CR58	RECOVERY ACTIVATE RELAY

Platform Control Box Wiring Diagram, S-60 HC
(from serial number 12800)

GM 3.0L Engine Wire Harness

GM 3.0L Engine Wire Harness

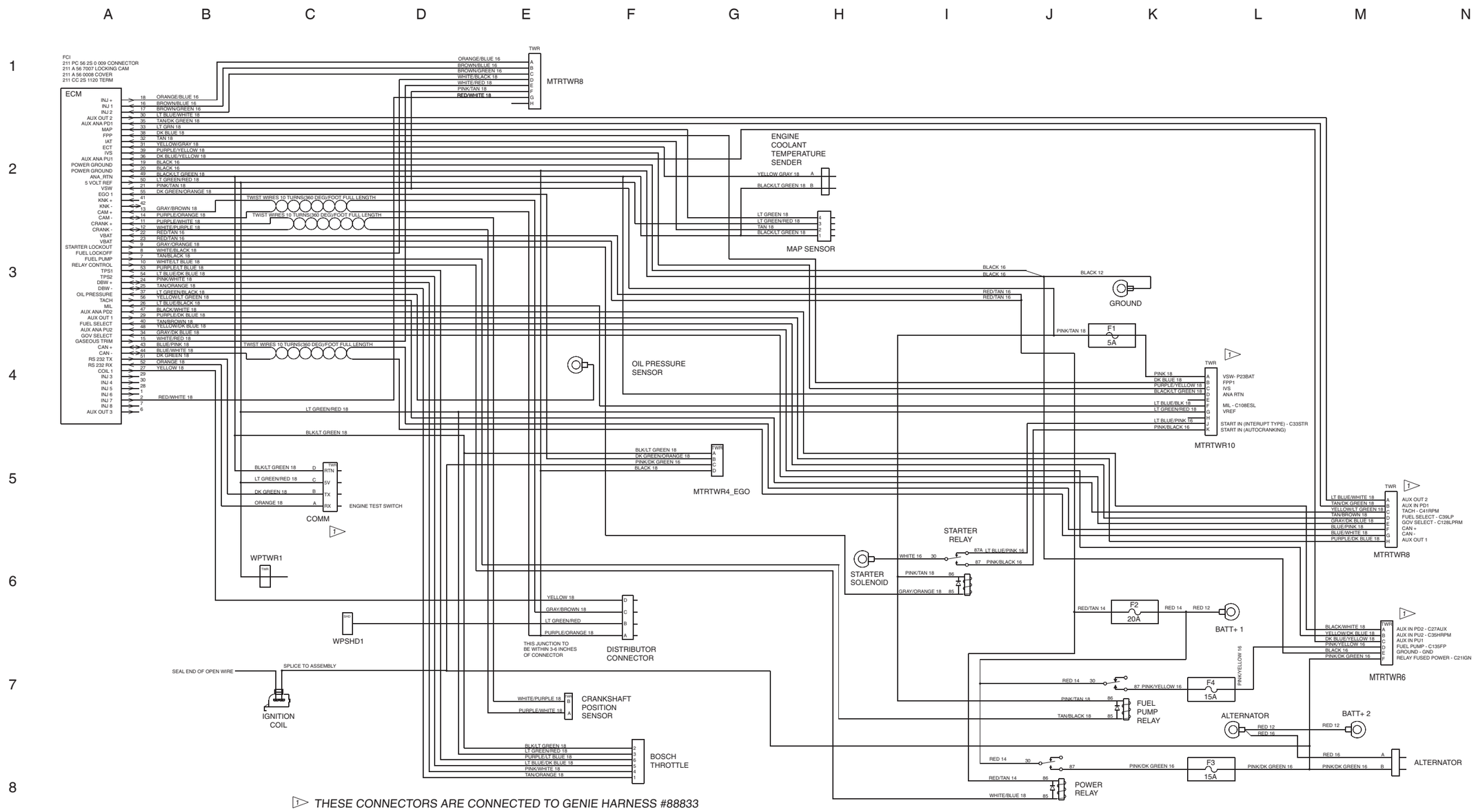

Ford LRG-425 EFI Engine Wire Harness

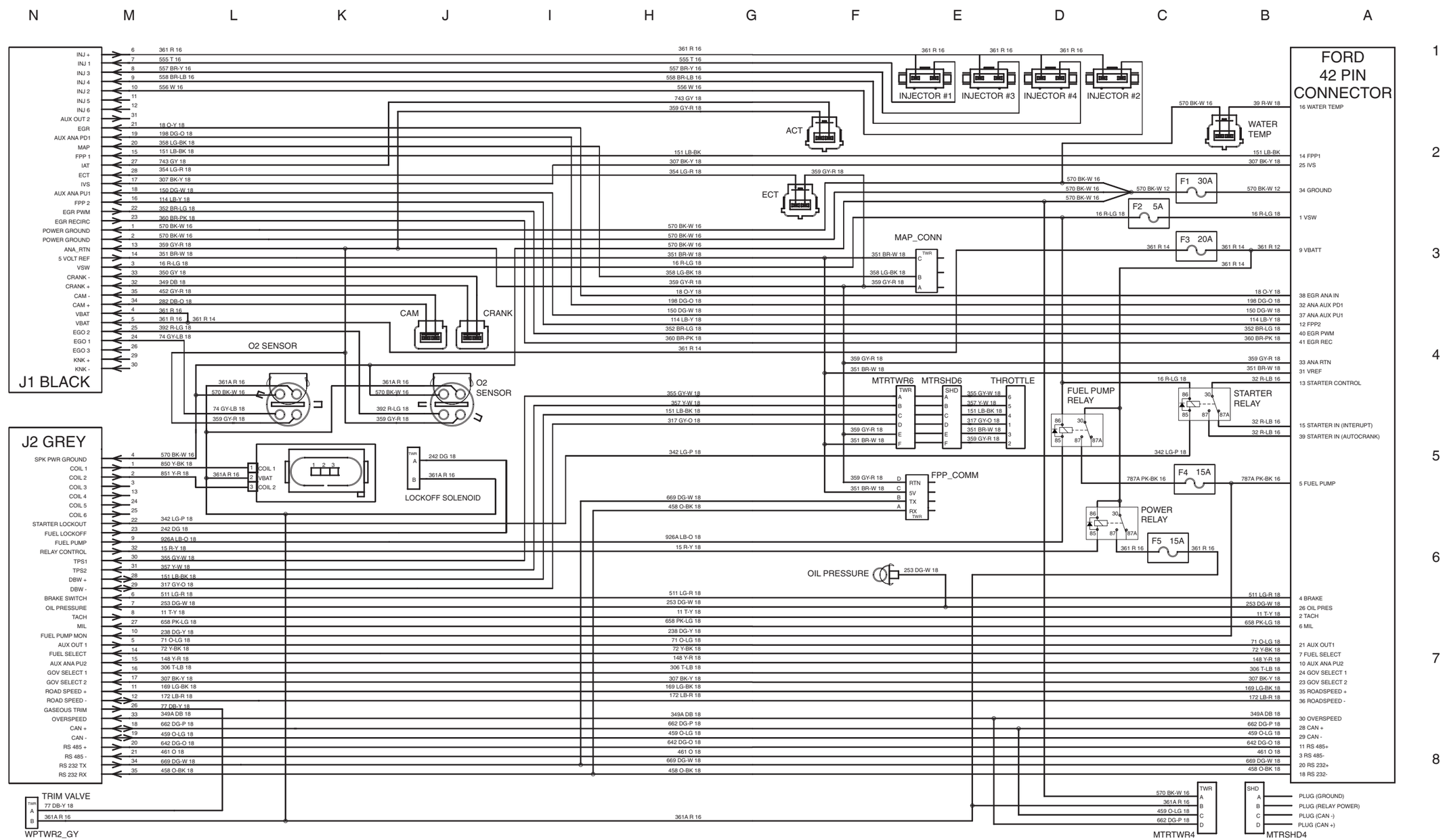

Ford LRG-425 EFI Engine Wire Harness

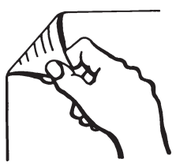

Ford DSG-423 EFI Engine Wire Harness

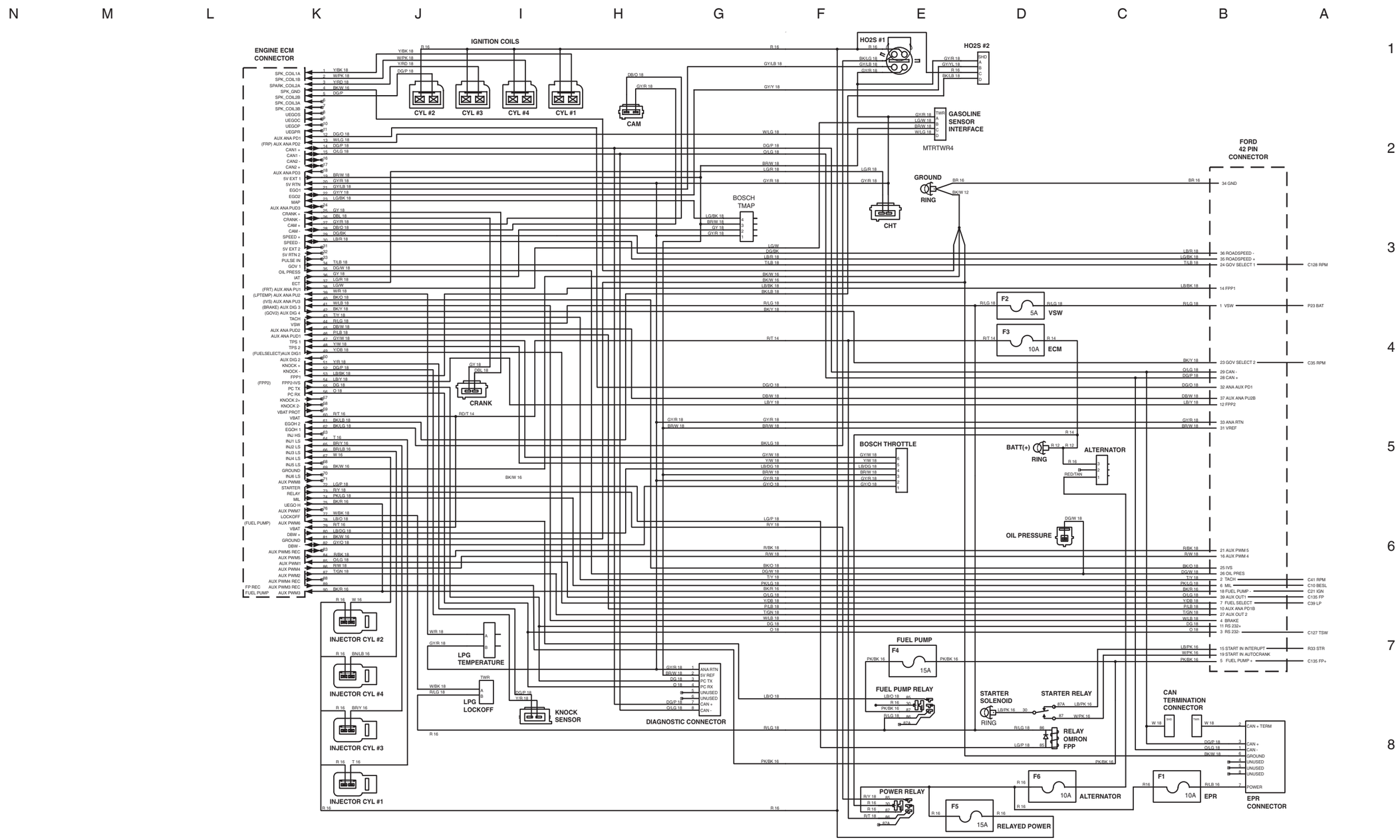

Ford DSG-423 EFI Engine Wire Harness

Electrical Schematic, S-60

GM 3.0L Models

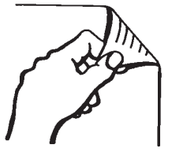

Electrical Schematic, S-60

GM 3.0L Models

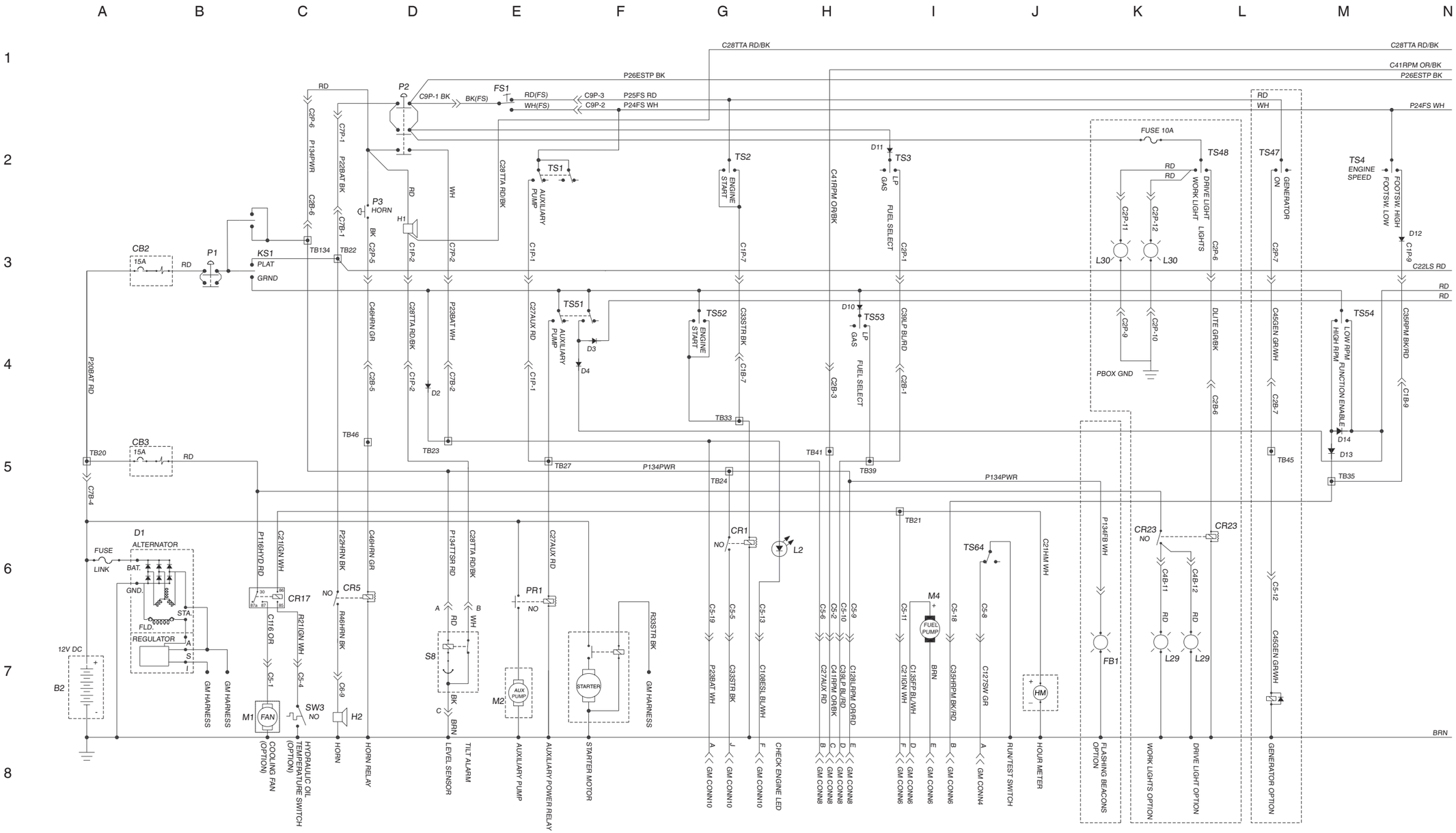

Electrical Schematic, S-60

GM 3.0L Models

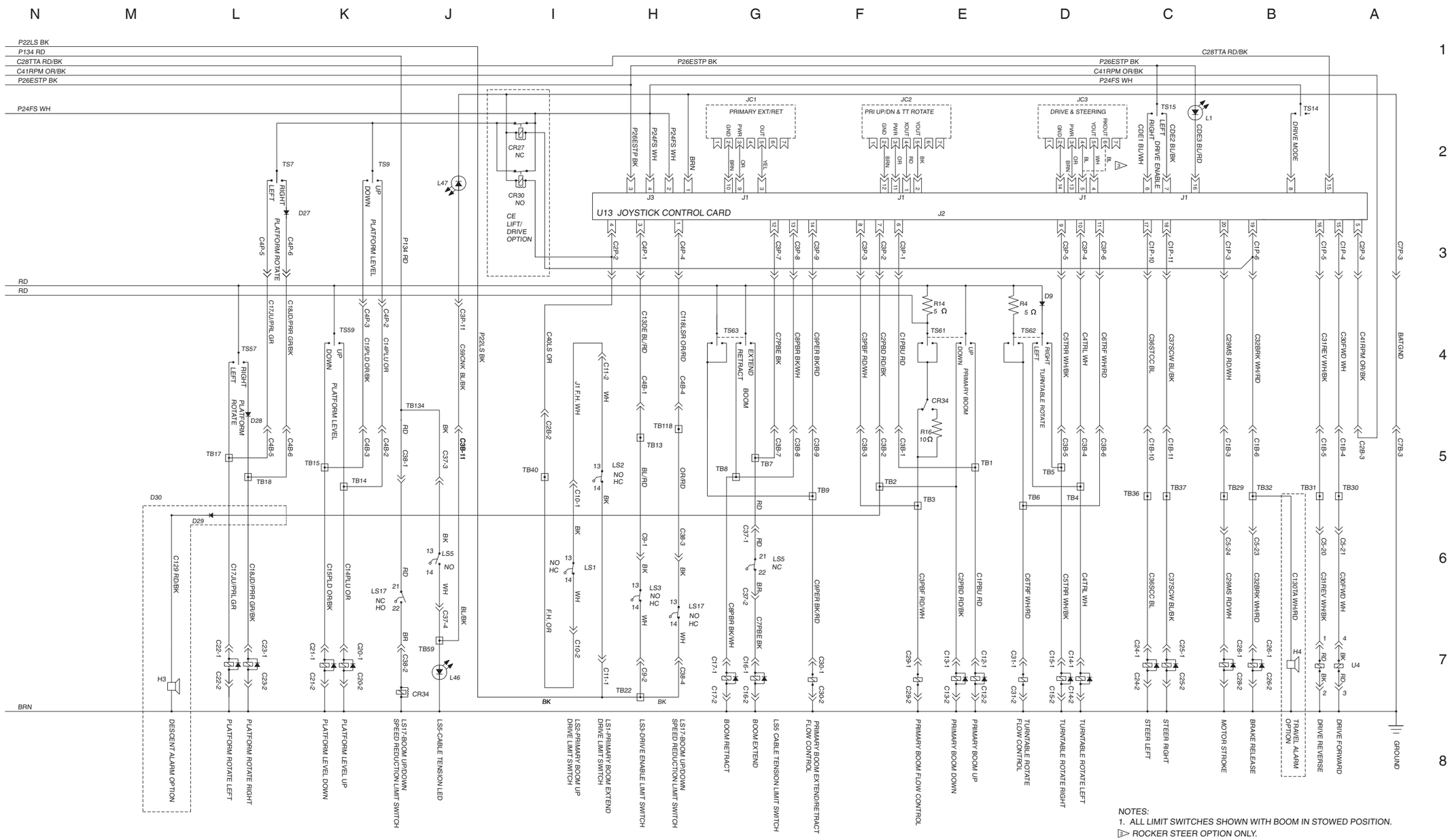

Electrical Schematic, S-60

GM 3.0L Models

Ground Control Box Terminal Strip Wiring Diagram, S-60

GM 3.0L Models

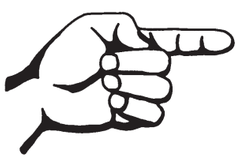

Ground Control Box Terminal Strip Wiring Diagram, S-60

GM 3.0L Models

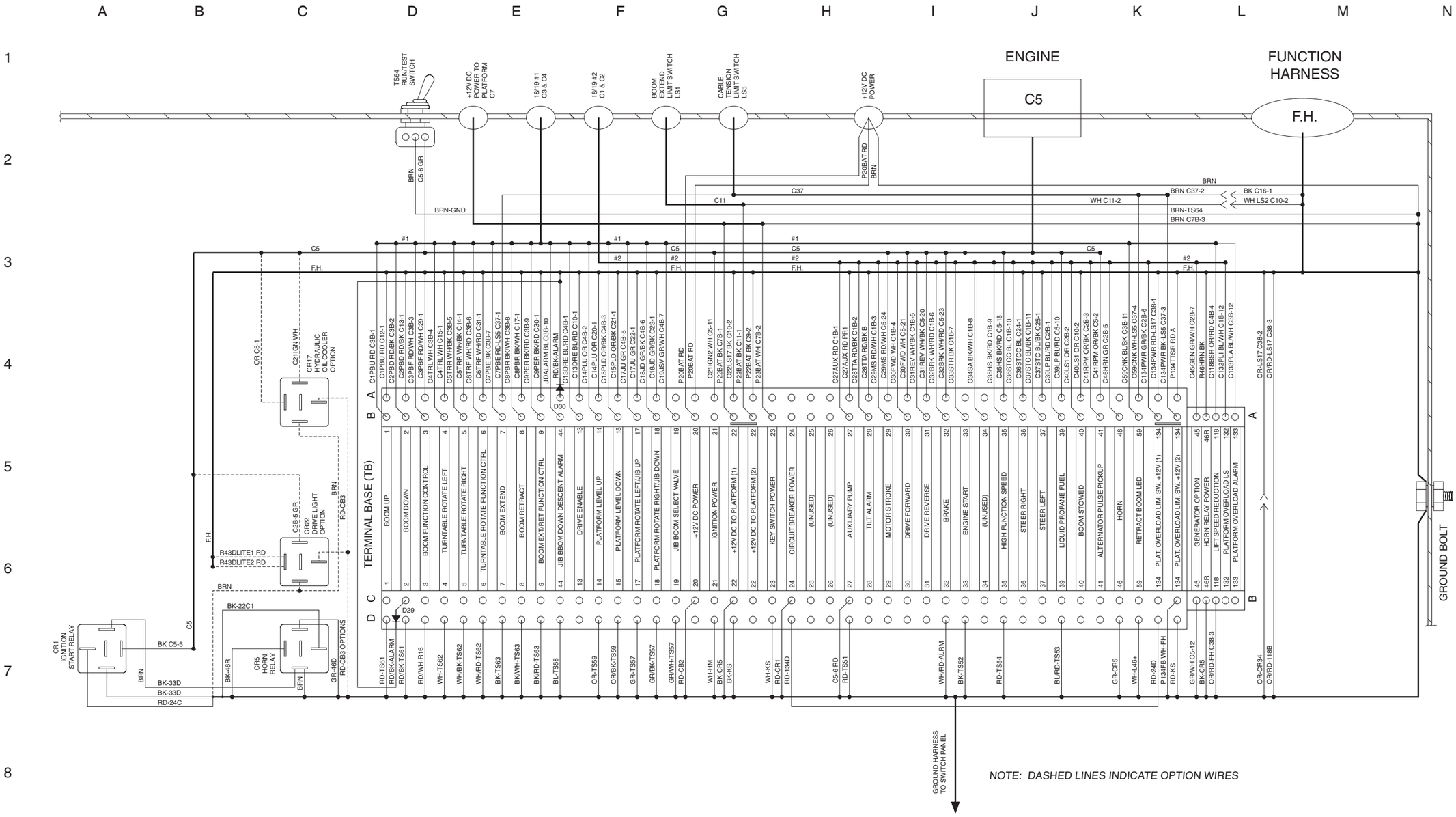

Ground Control Box Switch Panel Wiring Diagram, S-60

GM 3.0L Models

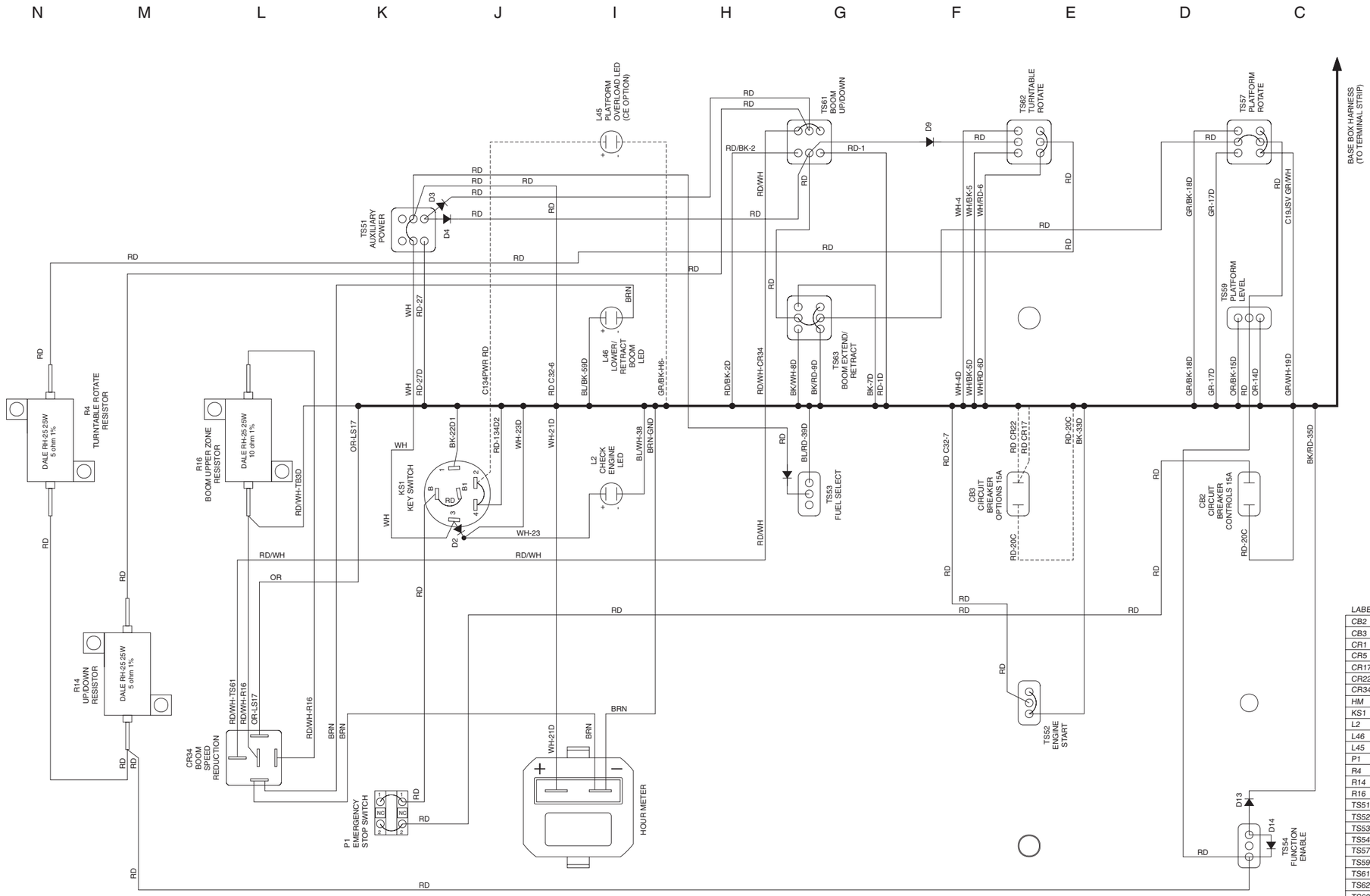

NOTE: DASHED LINES INDICATE OPTION WIRES

LABEL	DESCRIPTION
CB2	CIRCUIT BREAKER, CONTROLS, 15A
CB3	CIRCUIT BREAKER, OPTIONS, 15A
CR1	IGNITION / START RELAY
CR5	SERVICE HORN RELAY
CR17	HYDRAULIC OIL COOLER RELAY
CR22	DRIVE LIGHT RELAY (OPTION)
CR34	BOOM SPEED REDUCTION RELAY
HM	HOUR METER
KS1	KEY SWITCH
L2	CHECK ENGINE LED
L46	LOWER/RETRACT BOOM LED
L45	PLATFORM OVERLOAD LED (CE OPTION)
P1	EMERGENCY STOP BUTTON
R4	SPEED LIMITING RESISTOR 5 OHMS
R14	SPEED LIMITING RESISTOR 5 OHMS
R16	SPEED LIMITING RESISTOR 10 OHMS
TS51	AUXILIARY POWER TOGGLE SWITCH
TS52	ENGINE START TOGGLE SWITCH
TS53	FUEL SELECT TOGGLE SWITCH
TS54	FUNCTION ENABLE TOGGLE SWITCH
TS57	PLATFORM ROTATE TOGGLE SWITCH
TS59	PLATFORM LEVEL TOGGLE SWITCH
TS61	BOOM UP/DOWN TOGGLE SWITCH
TS62	TURNTABLE ROTATE TOGGLE SWITCH
TS63	BOOM EXTEND/RETRACT TOGGLE SWITCH
TS64	RUN/TEST TOGGLE SWITCH

Ground Control Box Switch Panel Wiring Diagram, S-60

GM 3.0L Models

Platform Control Box Wiring Diagram, S-60

GM 3.0L Models

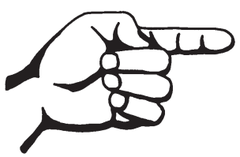

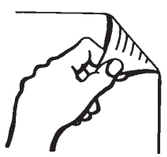

Platform Control Box Wiring Diagram, S-60

GM 3.0L Models

ITEM	DESCRIPTION
H1	TILT ALARM
C7P	12V DC PLATFORM POWER CONNECTOR
C9	FOOTSWITCH CONNECTOR
C1P-C4P	48 PIN CONNECTOR BLOCK
U13	ALC-500 CONTROL BOARD
J1	CONTROL BOARD INPUT CONNECTOR
J2	CONTROL BOARD OUTPUT CONNECTOR
J3	CONTROL BOARD POWER CONNECTOR
CR27	CONTROL RELAY (CE OPTION)
CR30	CONTROL RELAY (CE OPTION)
LS18	LOAD SENSE LIMIT SWITCH

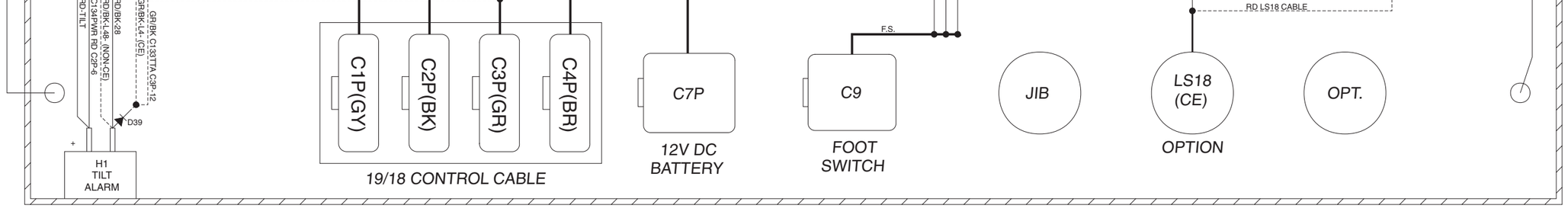

Platform Control Box Switch Panel Wiring Diagram, S-60

GM 3.0L Models

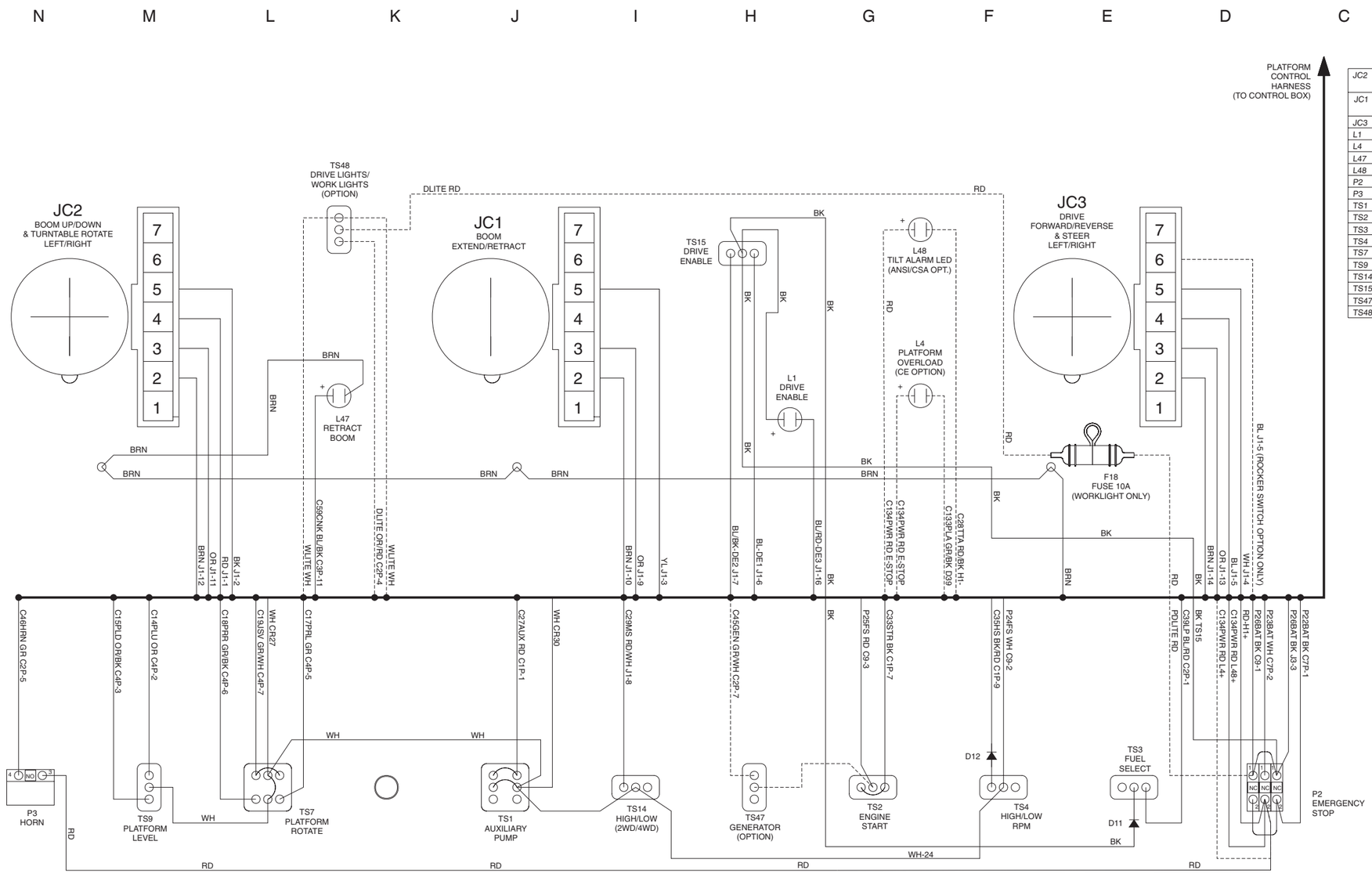

COMPONENT INDEX

JC2	*BOOM PROPORTIONAL JOYSTICK: BOOM UP/DOWN , TURNTABLE ROTATE*
JC1	*BOOM PROPORTIONAL JOYSTICK: BOOM EXTEND/RETRACT*
JC3	*DRIVE/STEER PROPORTIONAL JOYSTICK*
L1	*DRIVE ENABLE LED*
L4	*PLATFORM OVERLOAD LED*
L47	*LOWER/RETRACT BOOM LED*
L48	*BOOM TILTED LED*
P2	*EMERGENCY STOP BUTTON*
P3	*HORN SWITCH*
TS1	*AUXILIARY TOGGLE SWITCH*
TS2	*ENGINE START TOGGLE SWITCH*
TS3	*FUEL SELECT TOGGLE SWITCH*
TS4	*HI/LOW RPM TOGGLE SWITCH*
TS7	*PLATFORM ROTATE TOGGLE SWITCH*
TS9	*PLATFORM LEVEL TOGGLE SWITCH*
TS14	*DRIVE SPEED TOGGLE SWITCH*
TS15	*DRIVE ENABLE TOGGLE SWITCH*
TS47	*GENERATOR TOGGLE SWITCH (OPTION)*
TS48	*DRIVE LIGHT/WORK LIGHT TOGGLE SWITCH (OPTION)*

NOTE: DASHED LINES INDICATE OPTION WIRES

Platform Control Box Switch Panel Wiring Diagram, S-60

GM 3.0L Models

Electrical Schematic, S-65

GM 3.0L Models

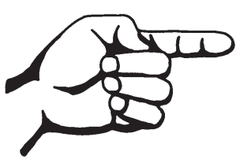

Electrical Schematic, S-65

GM 3.0L Models

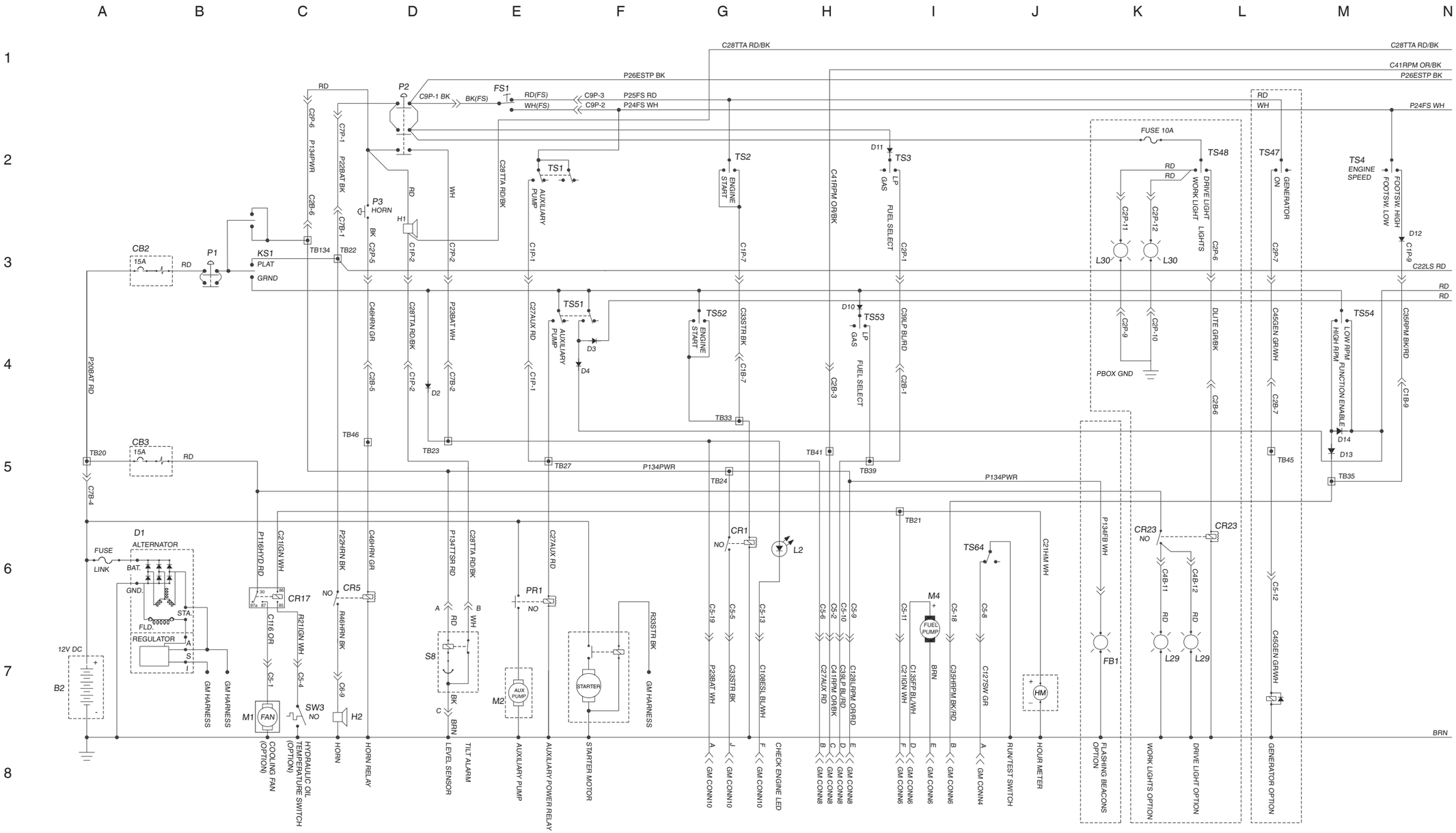

Electrical Schematic, S-65

GM 3.0L Models

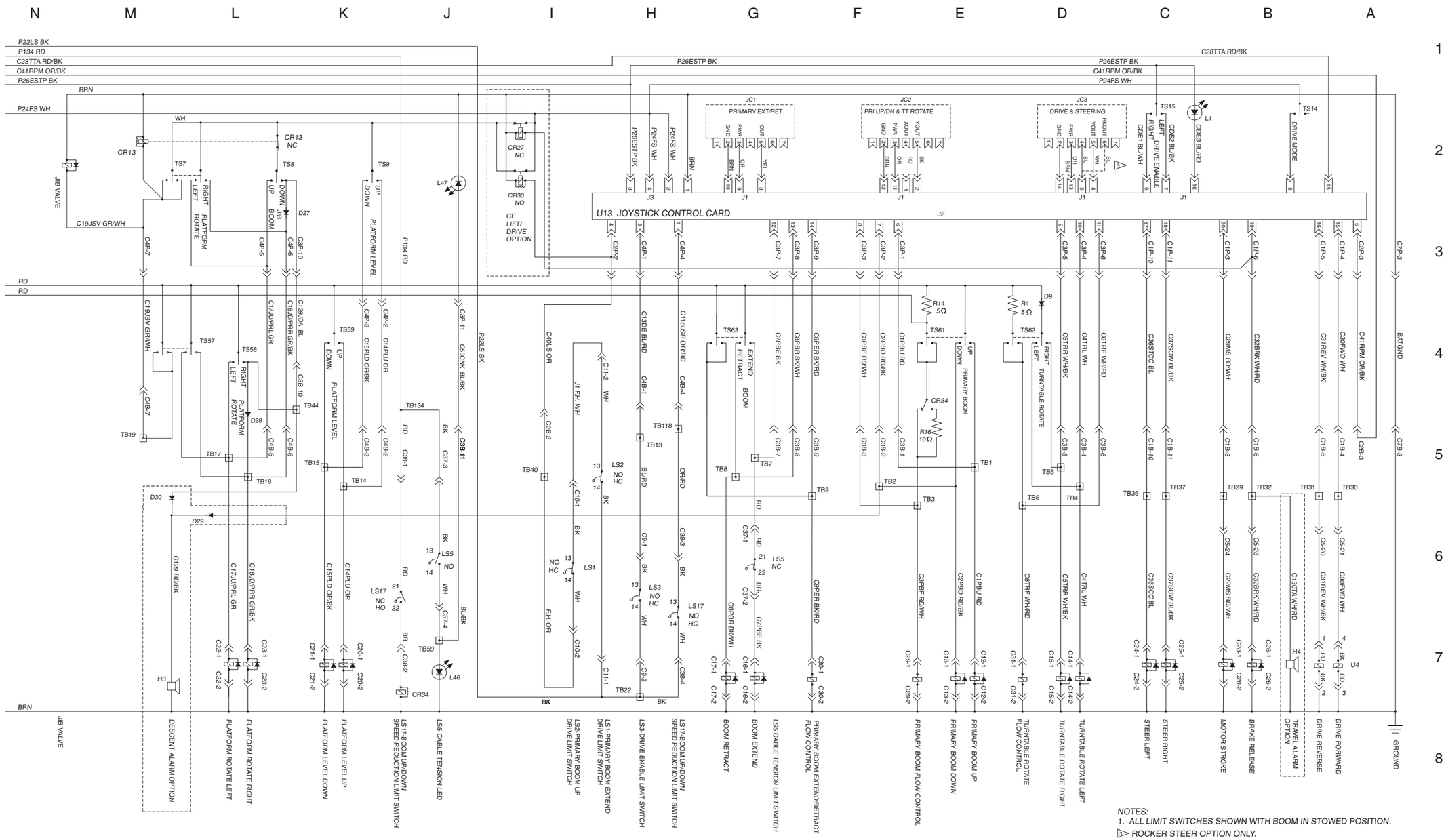

Electrical Schematic, S-65

GM 3.0L Models

Ground Control Box Terminal Strip Wiring Diagram, S-65

GM 3.0L Models

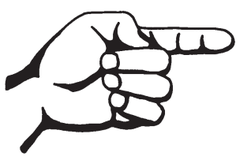

Ground Control Box Terminal Strip Wiring Diagram, S-65

GM 3.0L Models

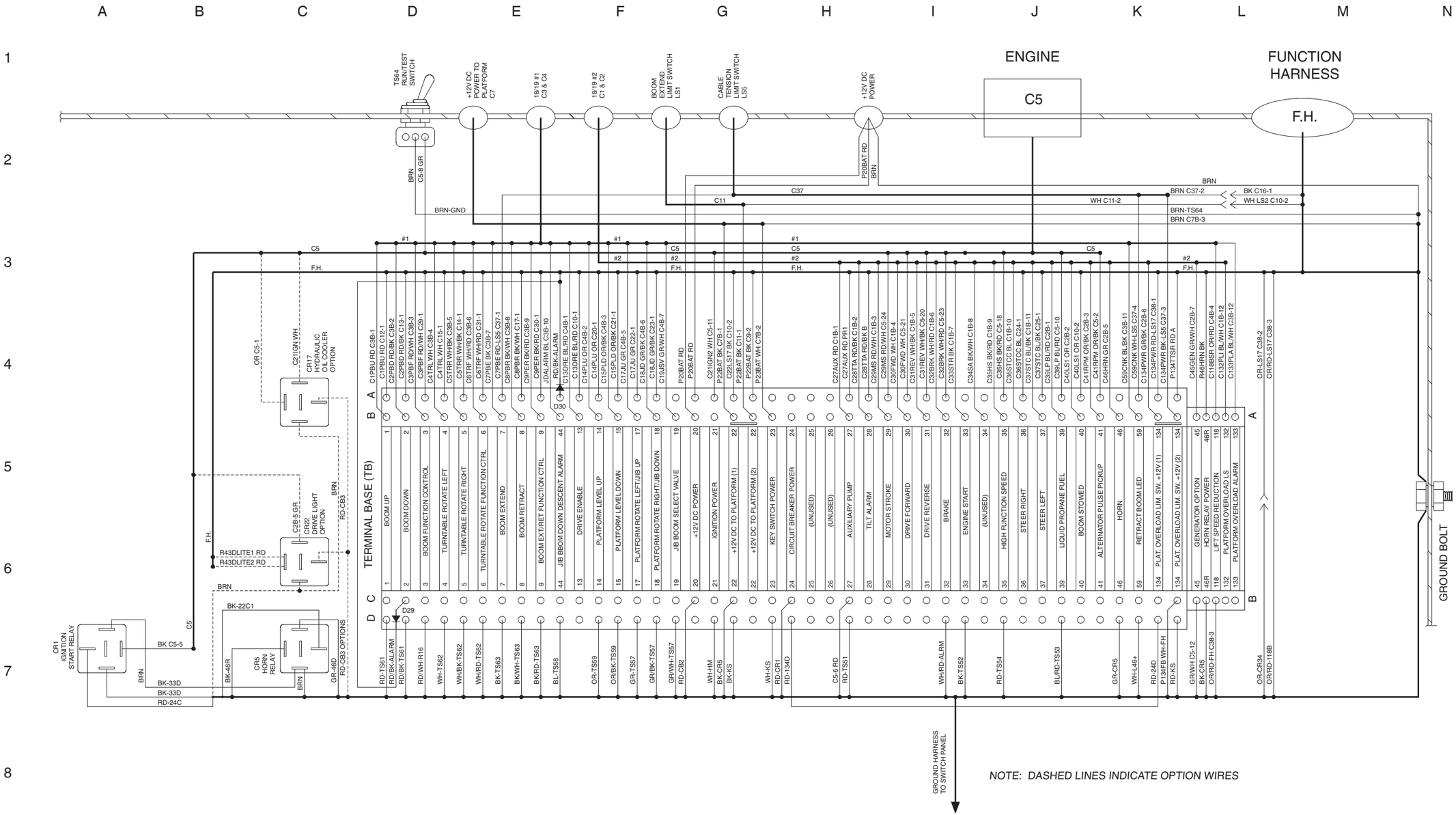

Ground Control Box Switch Panel Wiring Diagram, S-65

GM 3.0L Models

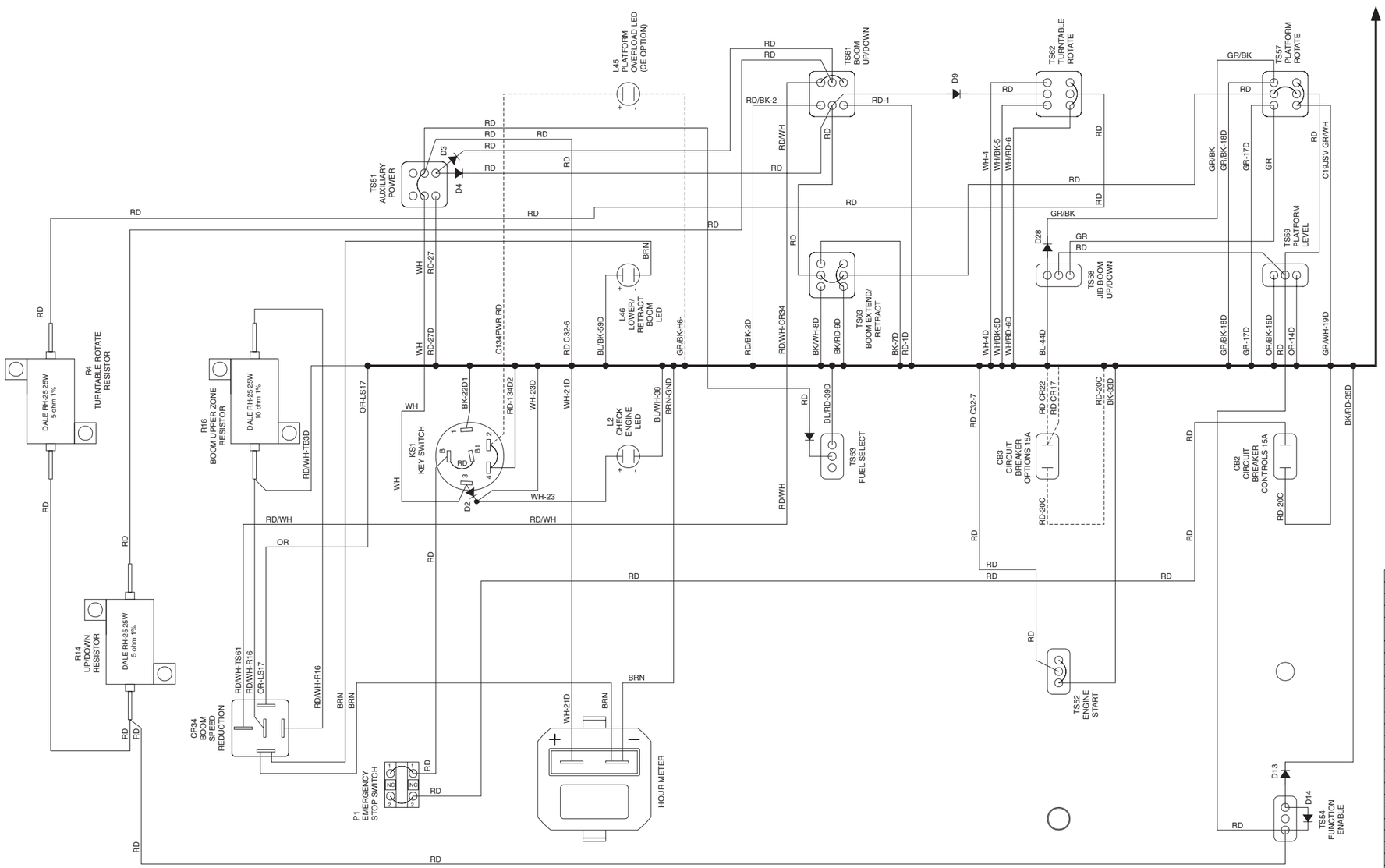

NOTE: DASHED LINES INDICATE OPTION WIRES

LABEL	DESCRIPTION
CB2	CIRCUIT BREAKER, CONTROLS, 15A
CB3	CIRCUIT BREAKER, OPTIONS, 15A
CR1	IGNITION / START RELAY
CR5	SERVICE HORN RELAY
CR17	HYDRAULIC OIL COOLER RELAY
CR22	DRIVE LIGHT RELAY (OPTION)
CR34	BOOM SPEED REDUCTION RELAY
HM	HOUR METER
KS1	KEY SWITCH
L2	CHECK ENGINE LED
L46	LOWER/RETRACT BOOM LED
L45	PLATFORM OVERLOAD LED (CE OPTION)
P1	EMERGENCY STOP BUTTON
R4	SPEED LIMITING RESISTOR 5 OHMS
R14	SPEED LIMITING RESISTOR 5 OHMS
R16	SPEED LIMITING RESISTOR 10 OHMS
TS51	AUXILIARY POWER TOGGLE SWITCH
TS52	ENGINE START TOGGLE SWITCH
TS53	FUEL SELECT TOGGLE SWITCH
TS54	FUNCTION ENABLE TOGGLE SWITCH
TS57	PLATFORM ROTATE TOGGLE SWITCH
TS58	JIB BOOM UP/DOWN TOGGLE SWITCH
TS59	PLATFORM LEVEL TOGGLE SWITCH
TS61	BOOM UP/DOWN TOGGLE SWITCH
TS62	TURNTABLE ROTATE TOGGLE SWITCH
TS63	BOOM EXTEND/RETRACT TOGGLE SWITCH
TS64	RUN/TEST TOGGLE SWITCH

Ground Control Box Switch Panel Wiring Diagram, S-65

GM 3.0L Models

Platform Control Box Wiring Diagram, S-65

GM 3.0L Models

Platform Control Box Wiring Diagram, S-65

GM 3.0L Models

ITEM	DESCRIPTION
H1	TILT ALARM
C7P	12V DC PLATFORM POWER CONNECTOR
C9	FOOTSWITCH CONNECTOR
C1P-C4P	48 PIN CONNECTOR BLOCK
U13	ALC-500 CONTROL BOARD
J1	CONTROL BOARD INPUT CONNECTOR
J2	CONTROL BOARD OUTPUT CONNECTOR
J3	CONTROL BOARD POWER CONNECTOR
CR27	CONTROL RELAY (CE OPTION)
CR30	CONTROL RELAY (CE OPTION)
LS18	LOAD SENSE LIMIT SWITCH

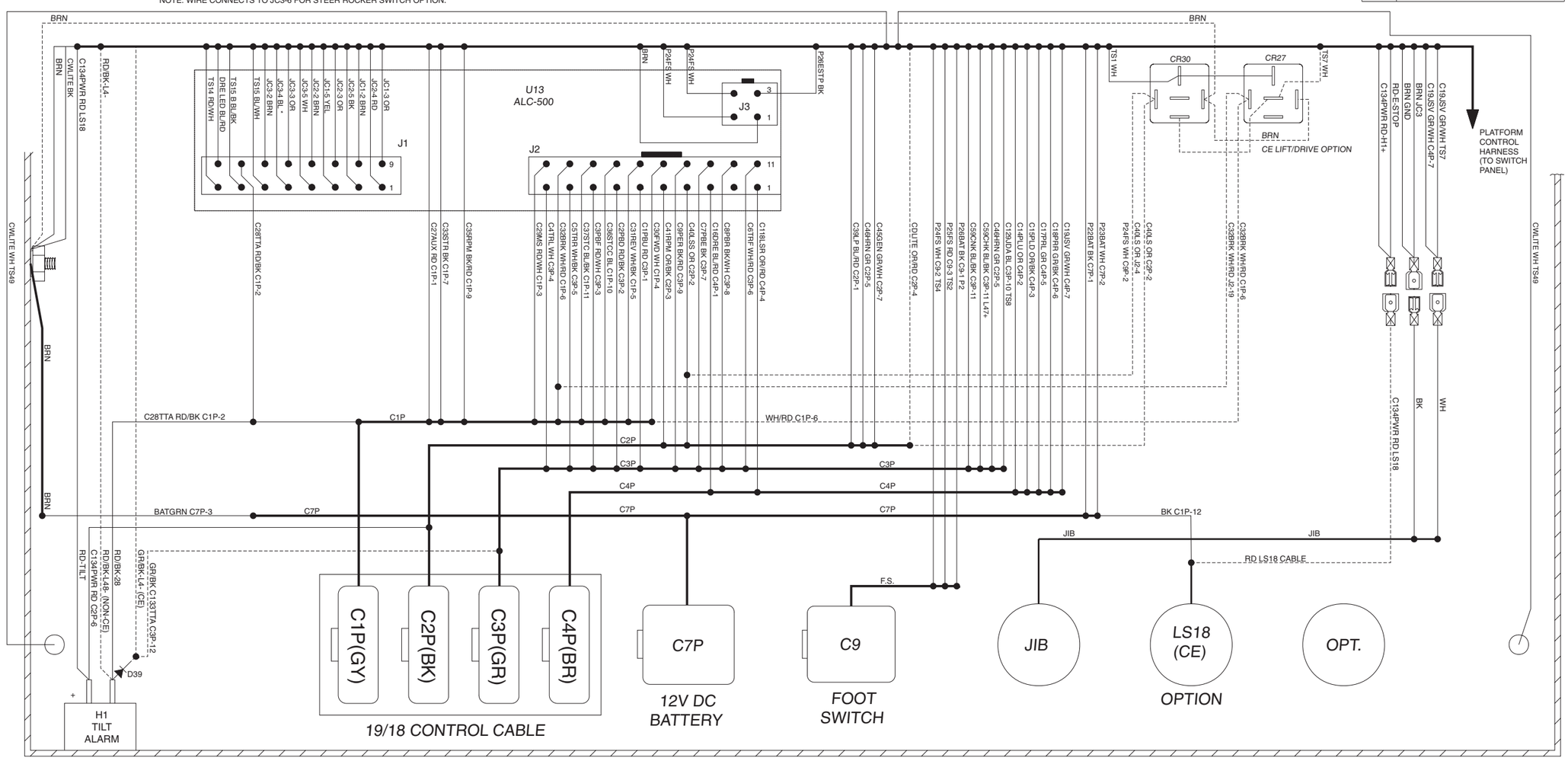

Platform Control Box Switch Panel Wiring Diagram, S-65

GM 3.0L Models

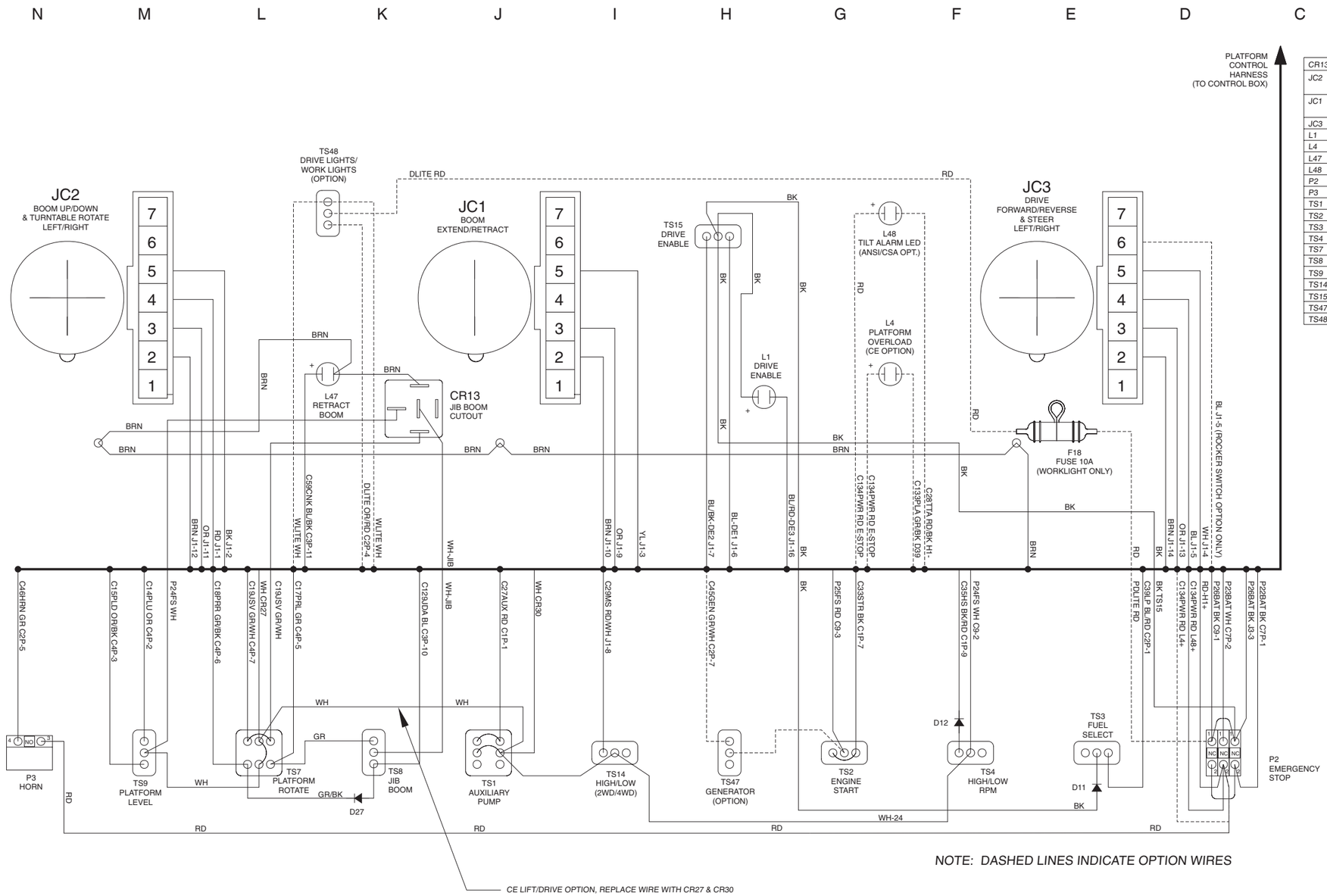

COMPONENT INDEX

CR13	JIB BOOM CUTOUT RELAY
JC2	BOOM PROPORTIONAL JOYSTICK: BOOM UP/DOWN , TURNTABLE ROTATE
JC1	BOOM PROPORTIONAL JOYSTICK: BOOM EXTEND/RETRACT
JC3	DRIVE/STEER PROPORTIONAL JOYSTICK
L1	DRIVE ENABLE LED
L4	PLATFORM OVERLOAD LED
L47	LOWER/RETRACT BOOM LED
L48	BOOM TILTED LED
P2	EMERGENCY STOP BUTTON
P3	HORN SWITCH
TS1	AUXILIARY TOGGLE SWITCH
TS2	ENGINE START TOGGLE SWITCH
TS3	FUEL SELECT TOGGLE SWITCH
TS4	HI/LOW RPM TOGGLE SWITCH
TS7	PLATFORM ROTATE TOGGLE SWITCH
TS8	JIB BOOM UP/DOWN TOGGLE SWITCH
TS9	PLATFORM LEVEL TOGGLE SWITCH
TS14	DRIVE SPEED TOGGLE SWITCH
TS15	DRIVE ENABLE TOGGLE SWITCH
TS47	GENERATOR TOGGLE SWITCH (OPTION)
TS48	DRIVE LIGHT/WORK LIGHT TOGGLE SWITCH (OPTION)

Platform Control Box Switch Panel Wiring Diagram, S-65

GM 3.0L Models

Electrical Schematic, S-60

Ford LRG-425 EFI Models (before serial number 11880)

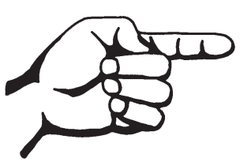

Electrical Schematic, S-60

Ford LRG-425 EFI Models (before serial number 11880)

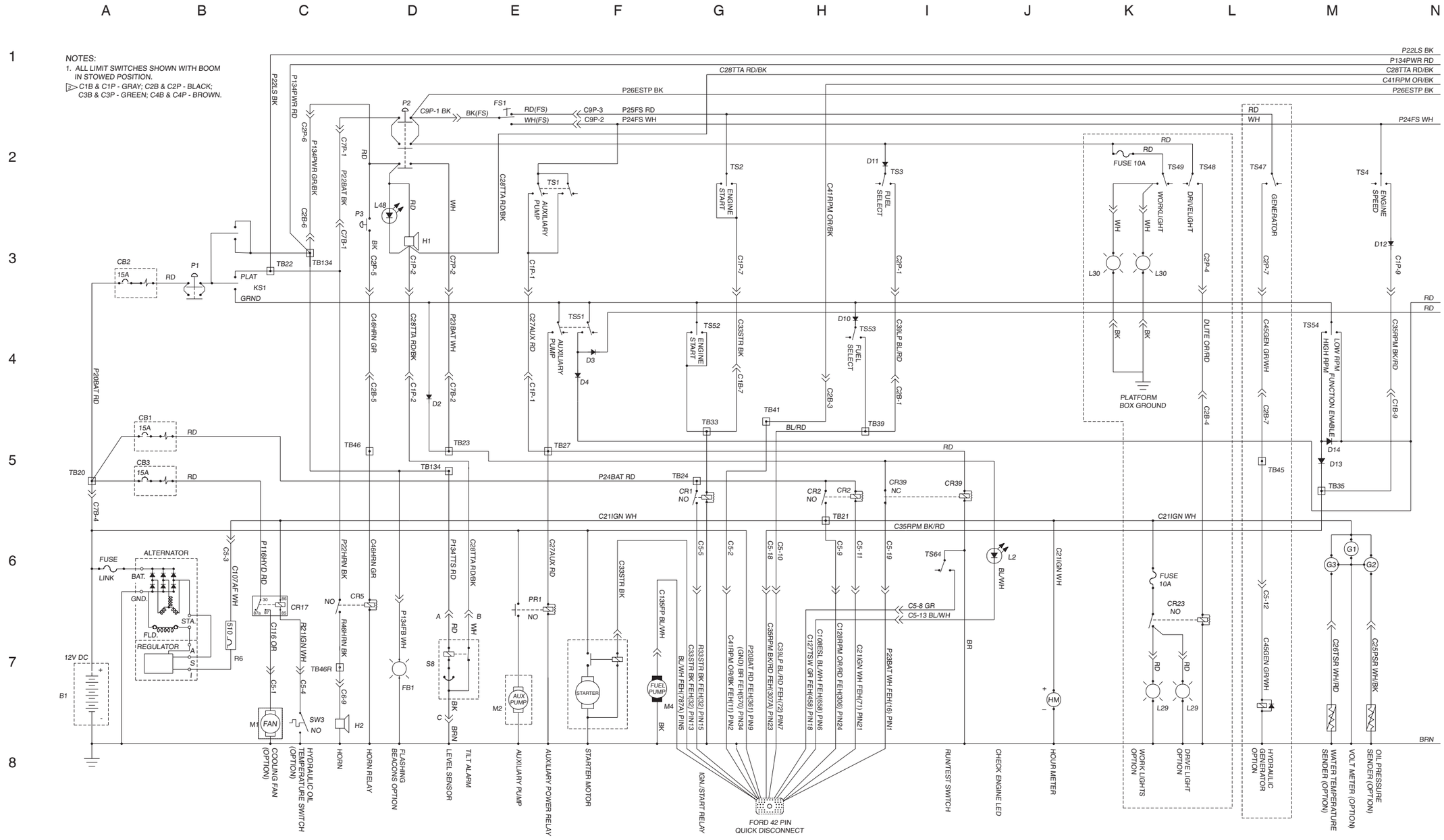

Electrical Schematic, S-60

Ford LRG-425 EFI Models (before serial number 11880)

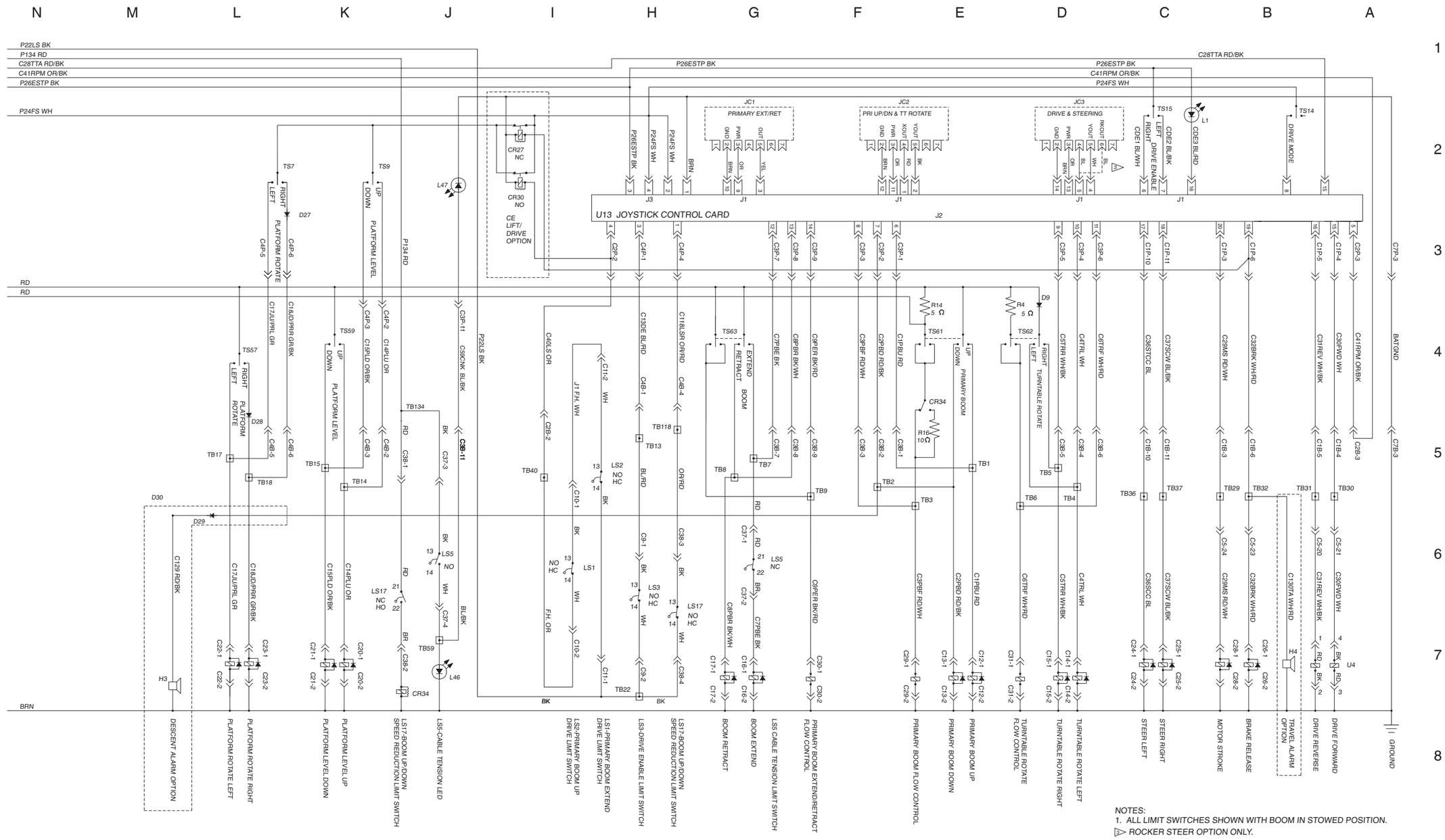

NOTES:
1. ALL LIMIT SWITCHES SHOWN WITH BOOM IN STOWED POSITION.
3 ROCKER STEER OPTION ONLY.

Electrical Schematic, S-60

Ford LRG-425 EFI Models (before serial number 11880)

Electrical Schematic, S-60

Ford LRG-425 EFI Models (from serial number 11880 to 14053)

Electrical Schematic, S-60

Ford LRG-425 EFI Models (from serial number 11880 to 14053)

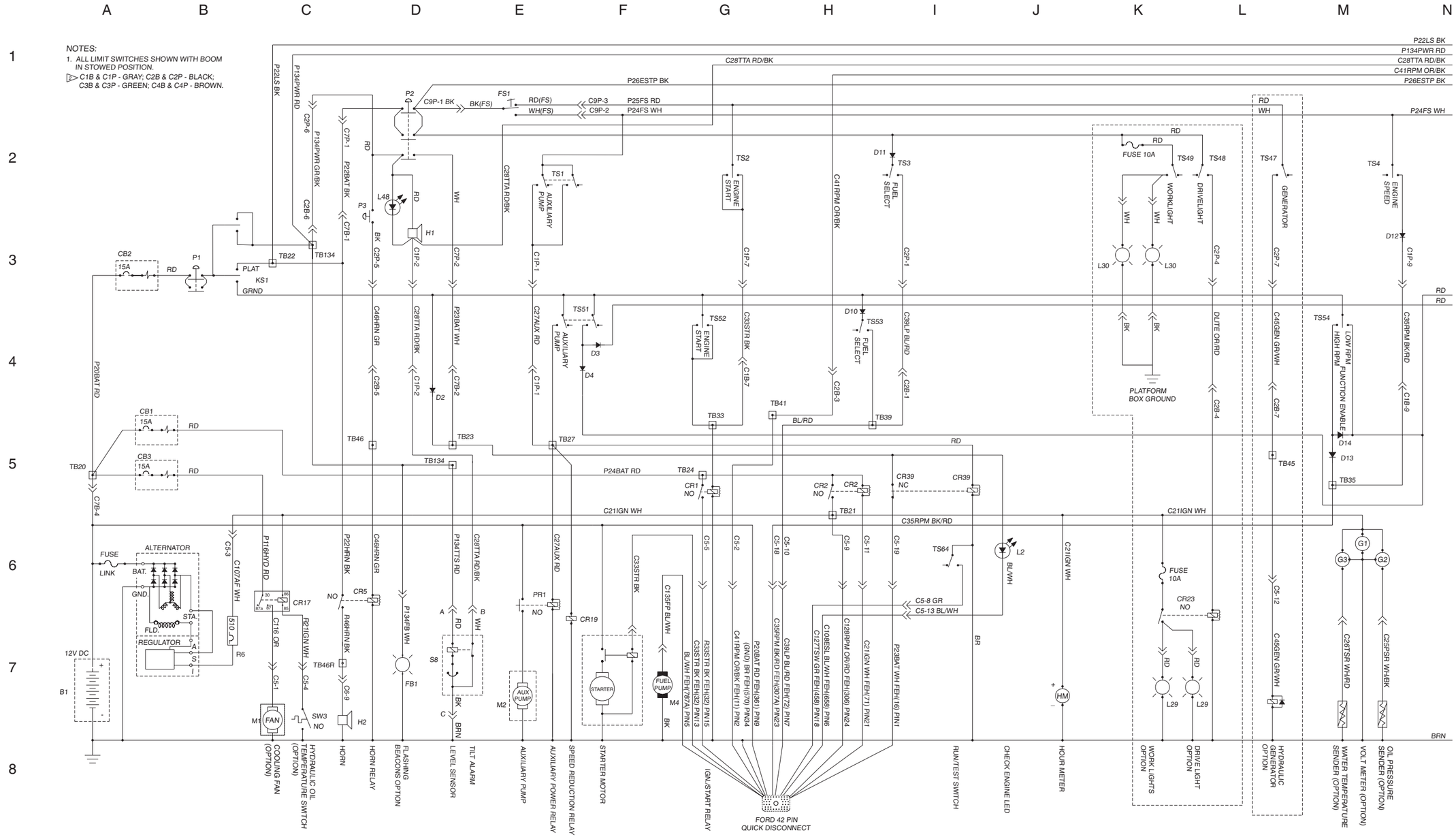

Electrical Schematic, S-60

Ford LRG-425 EFI Models (from serial number 11880 to 14053)

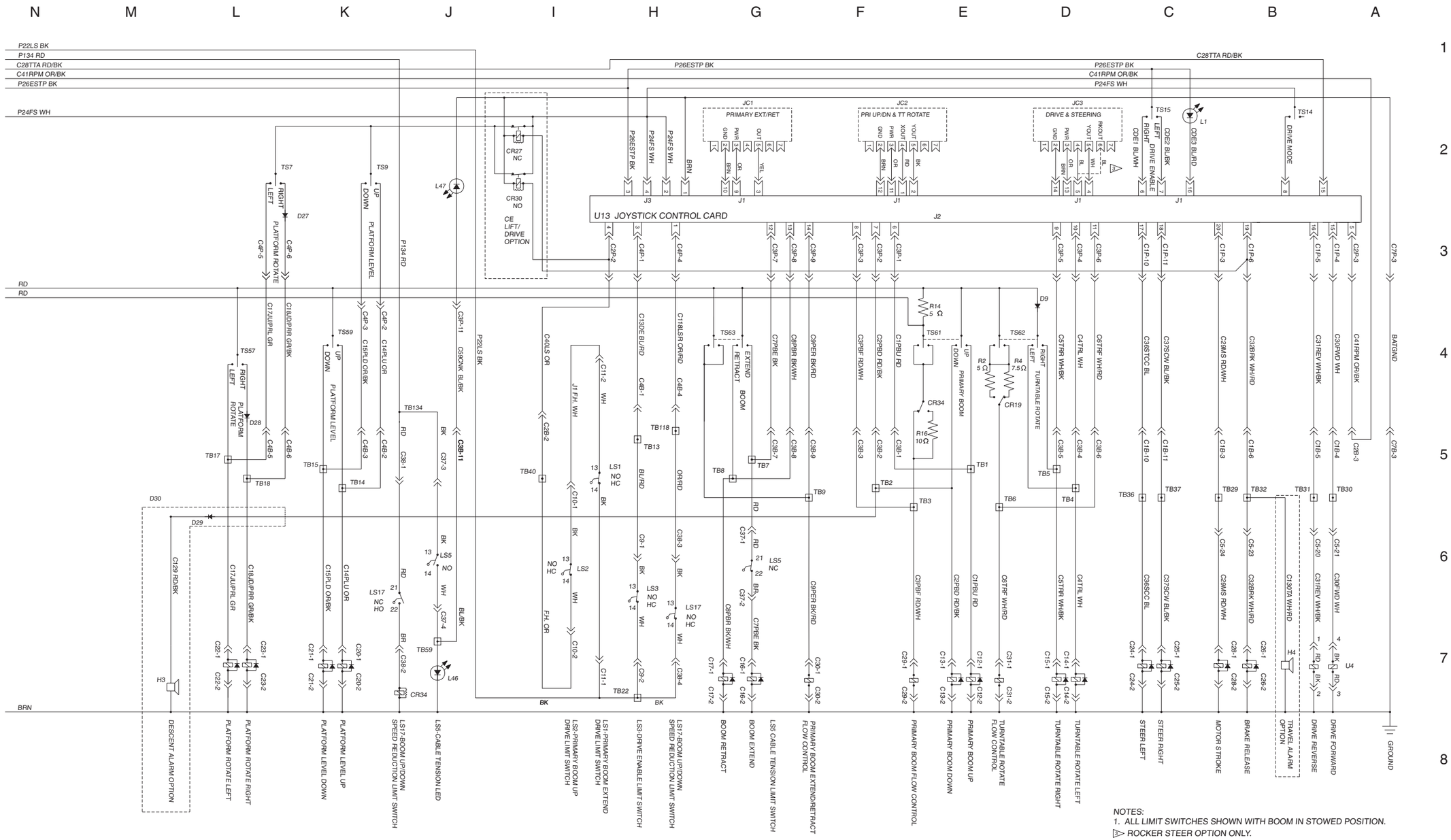

NOTES:
1. ALL LIMIT SWITCHES SHOWN WITH BOOM IN STOWED POSITION.
▷ ROCKER STEER OPTION ONLY.

Electrical Schematic, S-60

Ford LRG-425 EFI Models (from serial number 11880 to 14053)

Electrical Schematic, S-60

Ford DSG-423 EFI Models (after serial number 14053)

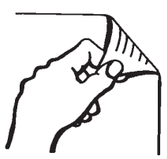

Electrical Schematic, S-60

Ford DSG-423 EFI Models (after serial number 14053)

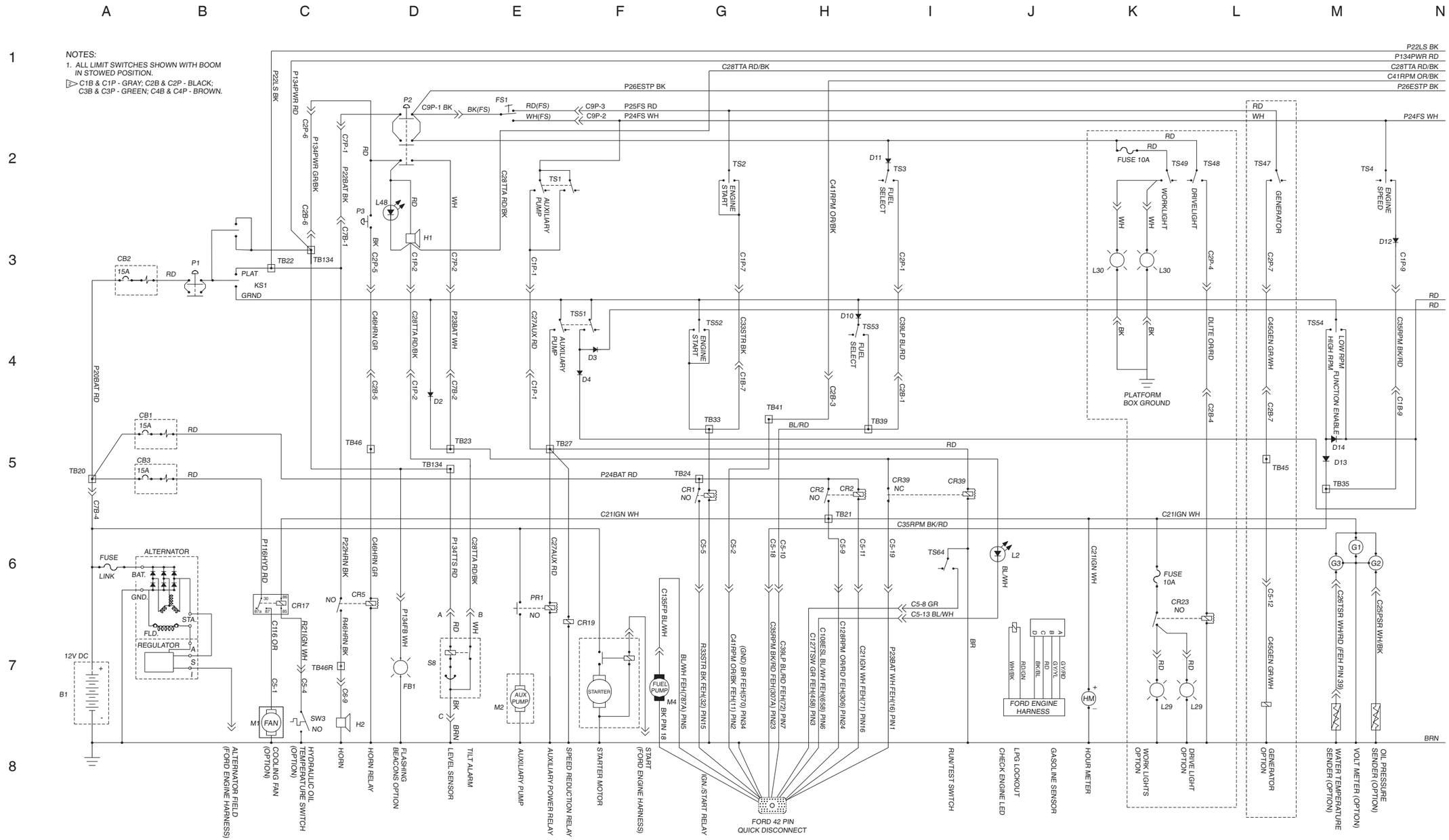

Electrical Schematic, S-60

Ford DSG-423 EFI Models (after serial number 14053)

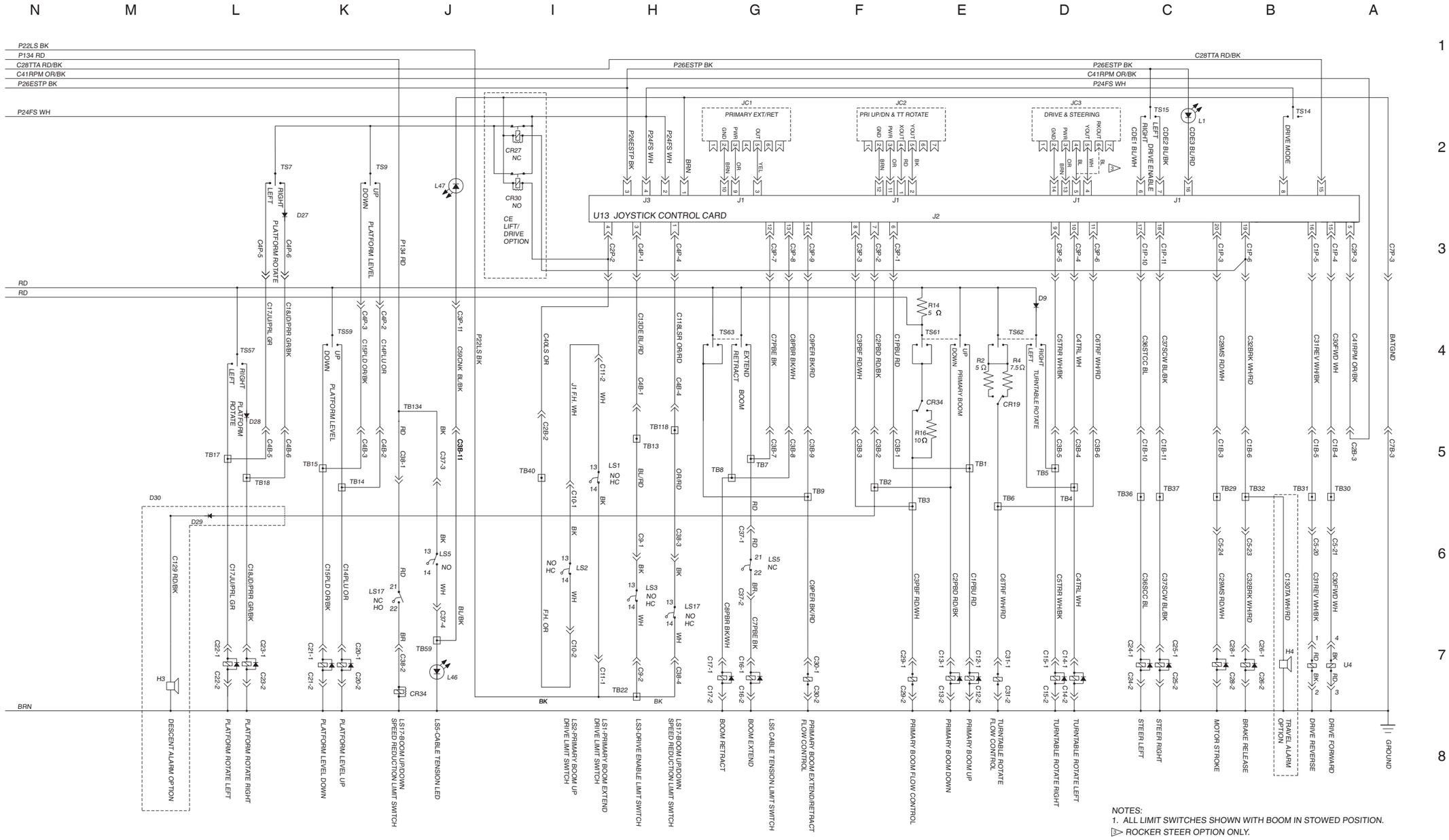

NOTES:
1. ALL LIMIT SWITCHES SHOWN WITH BOOM IN STOWED POSITION.
△ ROCKER STEER OPTION ONLY.

Electrical Schematic, S-60

Ford DSG-423 EFI Models (after serial number 14053)

Ground Control Box Terminal Strip Wiring Diagram, S-60

Ford LRG-425 EFI Models (before serial number 11880)

Ground Control Box Terminal Strip Wiring Diagram, S-60

Ford LRG-425 EFI Models (before serial number 11880)

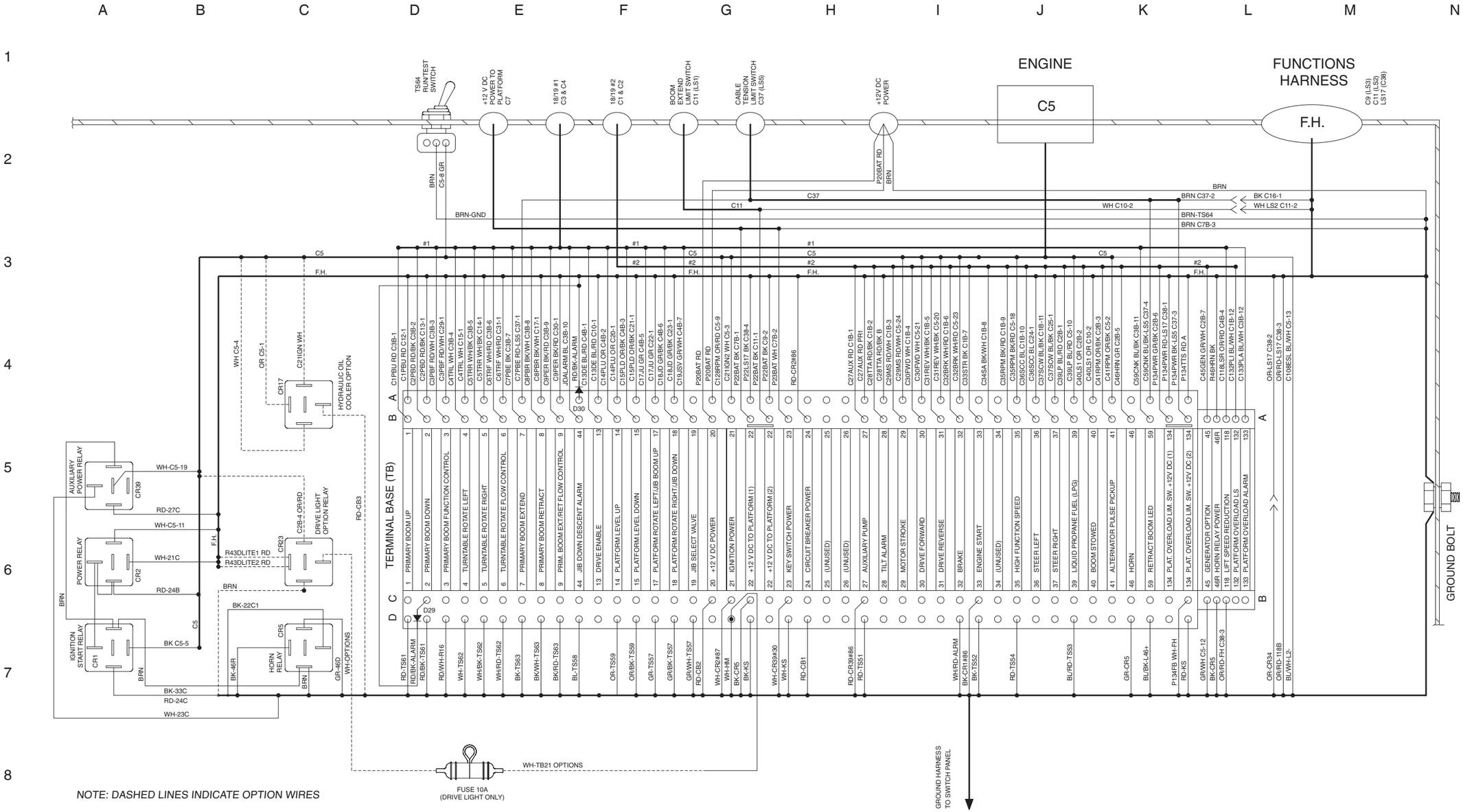

Ground Control Box Switch Panel Wiring Diagram, S-60

Ford LRG-425 EFI Models (before serial number 11880)

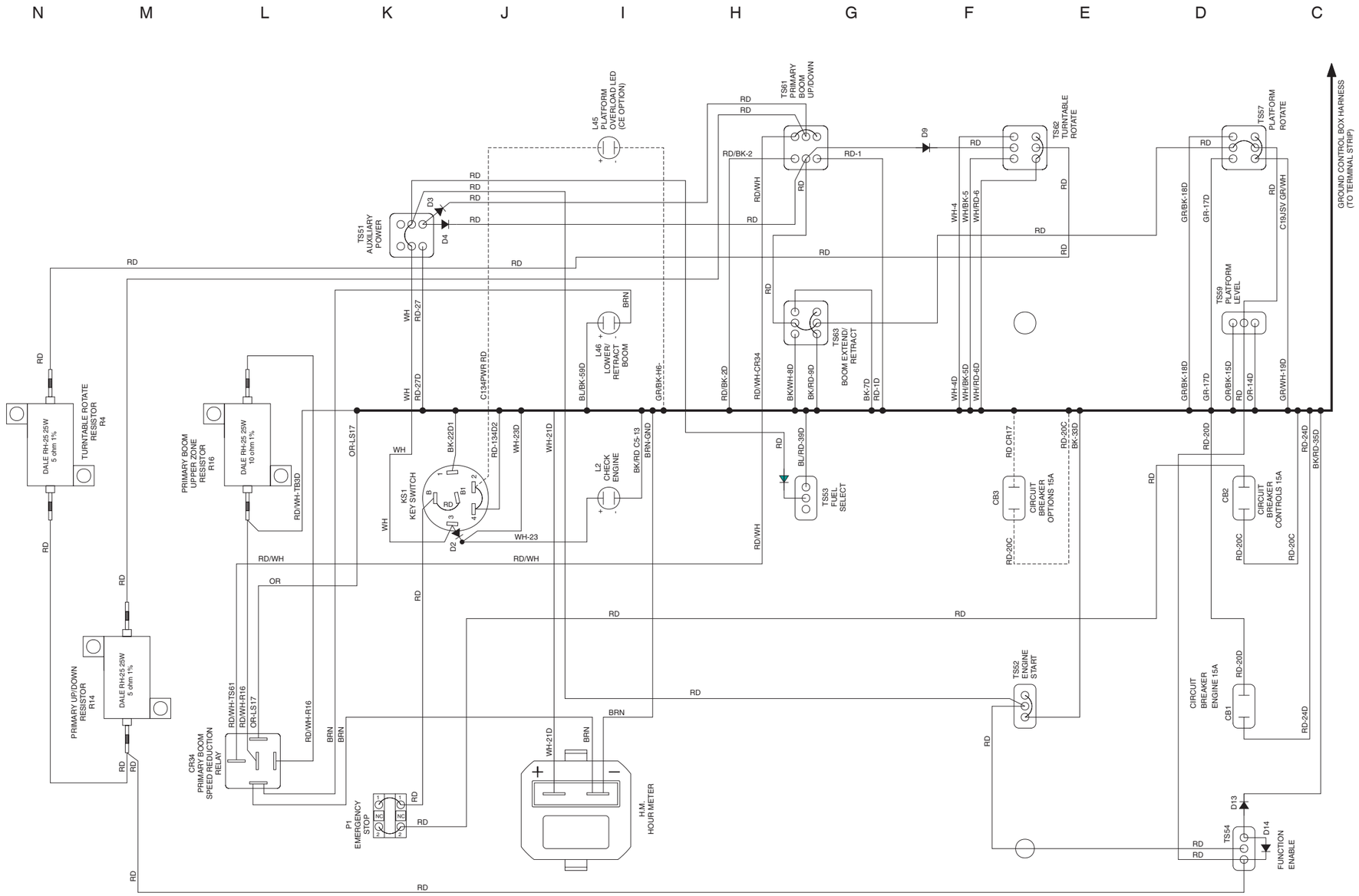

NOTE:
DASHED LINES INDICATE OPTION WIRES

LABEL	DESCRIPTION
CB1	CIRCUIT BREAKER, ENGINE, 15A
CB2	CIRCUIT BREAKER, CONTROLS, 15A
CB3	CIRCUIT BREAKER, OPTIONS, 15A
CR1	IGNITION / START RELAY
CR5	HORN RELAY
CR17	HYDRAULIC OIL COOLER FAN RELAY
CR23	DRIVE LIGHT RELAY (OPTION)
CR34	BOOM SPEED REDUCTION RELAY
CR39	AUXILIARY POWER RELAY
HM	HOUR METER
KS1	KEY SWITCH
L2	CHECK ENGINE LED
L46	LOWER/RETRACT BOOM LED
L45	PLATFORM OVERLOAD LED (CE OPTION)
P1	EMERGENCY STOP BUTTON
R4	SPEED LIMITING RESISTOR 5 OHMS
R14	SPEED LIMITING RESISTOR 5 OHMS
R16	SPEED LIMITING RESISTOR 10 OHMS
TS51	AUXILIARY POWER TOGGLE SWITCH
TS52	ENGINE START TOGGLE SWITCH
TS53	FUEL SELECT TOGGLE SWITCH
TS54	FUNCTION ENABLE TOGGLE SWITCH
TS57	PLATFORM ROTATE TOGGLE SWITCH
TS59	PLATFORM LEVEL TOGGLE SWITCH
TS61	PRIMARY BOOM UP/DOWN TOGGLE SWITCH
TS62	TURNTABLE ROTATE TOGGLE SWITCH
TS63	BOOM EXTEND/RETRACT TOGGLE SWITCH
TS64	RUN/TEST TOGGLE SWITCH

Ground Control Box Switch Panel Wiring Diagram, S-60

Ford LRG-425 EFI Models (before serial number 11880)

Ground Control Box Terminal Strip Wiring Diagram, S-60

Ford Models (after serial number 11879)

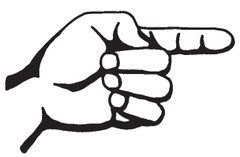

Ground Control Box Terminal Strip Wiring Diagram, S-60

Ford Models (after serial number 11879)

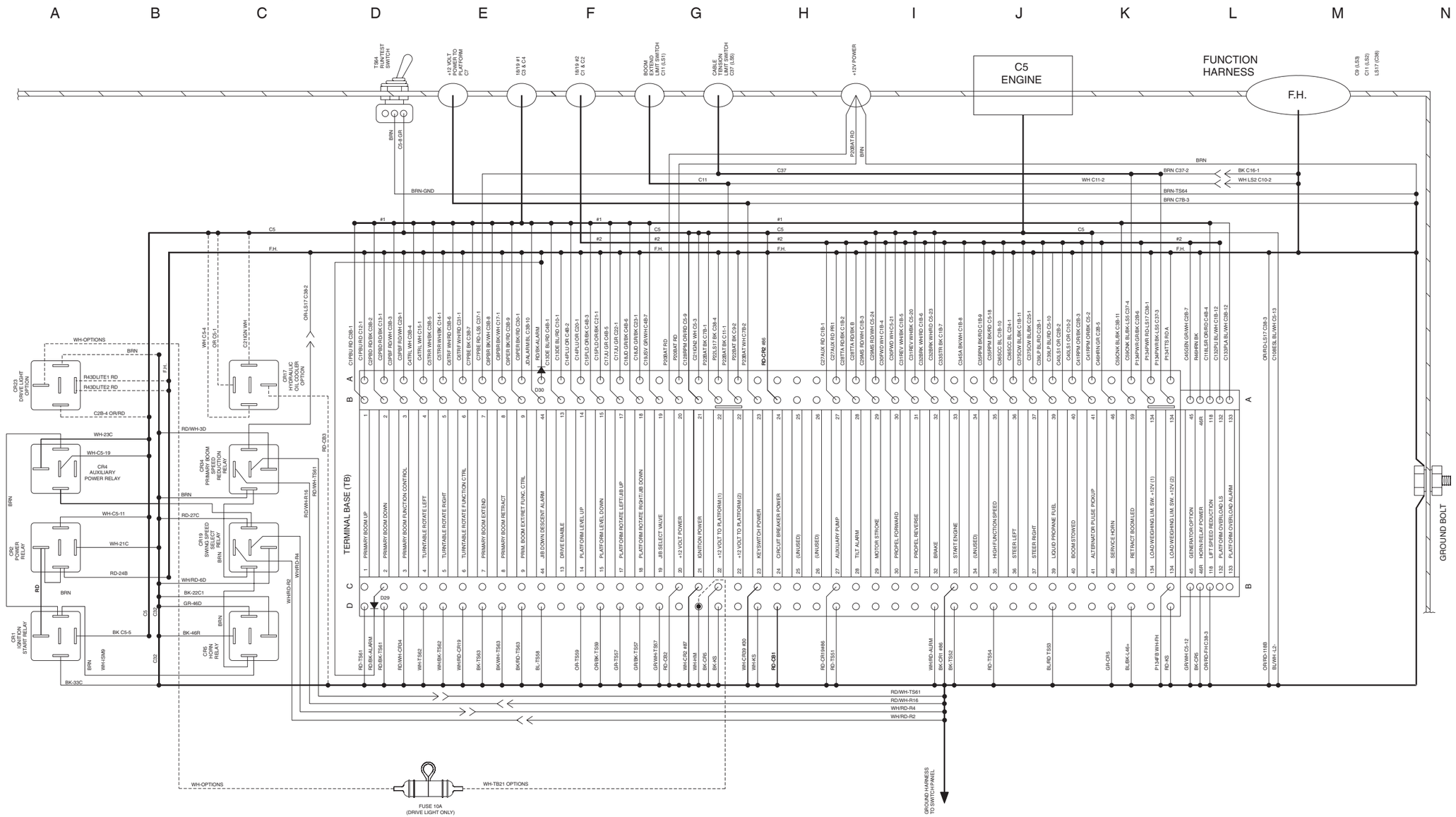

Ground Control Box Switch Panel Wiring Diagram, S-60

Ford Models (after serial number 11879)

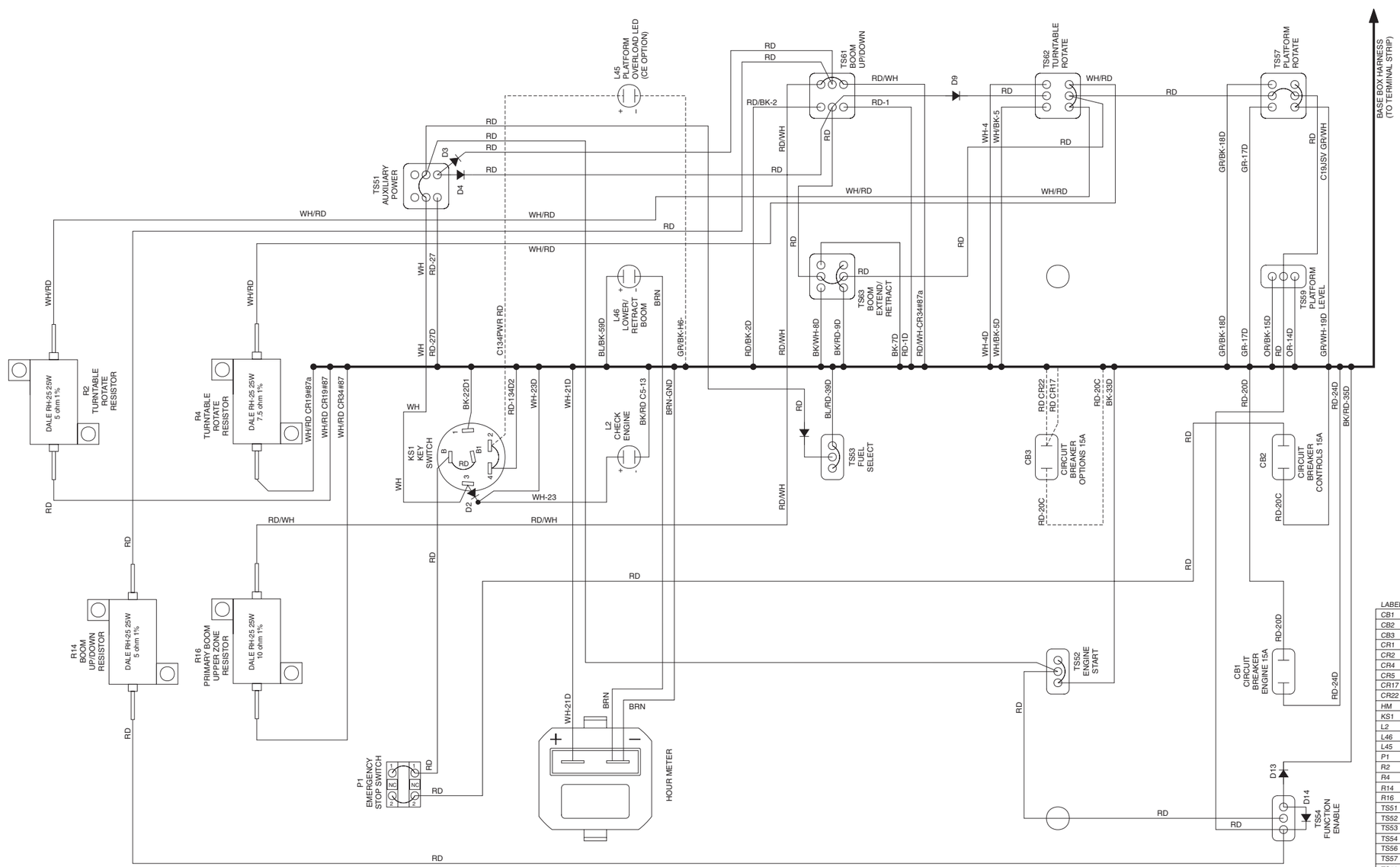

LABEL	DESCRIPTION
CB1	CIRCUIT BREAKER, ENGINE, 15A
CB2	CIRCUIT BREAKER, CONTROLS, 15A
CB3	CIRCUIT BREAKER, OPTIONS, 15A
CR1	IGNITION / START RELAY
CR2	IGNITION POWER RELAY
CR4	HIGH IDLE RELAY
CR5	HORN RELAY
CR17	HYDRAULIC OIL COOLER FAN RELAY
CR22	DRIVE LIGHT RELAY (OPTION)
HM	HOUR METER
KS1	KEY SWITCH
L2	CHECK ENGINE LED
L46	LOWER/RETRACT BOOM LED
L45	PLATFORM OVERLOAD LED (CE OPTION)
P1	EMERGENCY STOP BUTTON
R2	SPEED LIMITING RESISTOR 5 OHMS
R4	SPEED LIMITING RESISTOR 7.5 OHMS
R14	SPEED LIMITING RESISTOR 5 OHMS
R16	SPEED LIMITING RESISTOR 10 OHMS
TS51	AUXILIARY POWER TOGGLE SWITCH
TS52	ENGINE START TOGGLE SWITCH
TS53	FUEL SELECT TOGGLE SWITCH
TS54	FUNCTION ENABLE SWITCH
TS56	GLOW PLUG TOGGLE SWITCH
TS57	PLATFORM ROTATE TOGGLE SWITCH
TS59	PLATFORM LEVEL TOGGLE SWITCH
TS61	PRIMARY BOOM UP/DOWN TOGGLE SWITCH
TS62	TURNTABLE ROTATE TOGGLE SWITCH
TS63	BOOM EXTEND/RETRACT TOGGLE SWITCH

NOTE: DASHED LINES INDICATE OPTION WIRES

Ground Control Box Switch Panel Wiring Diagram, S-60

Ford Models (after serial number 11879)

Platform Control Box Wiring Diagram, S-60

Ford Models

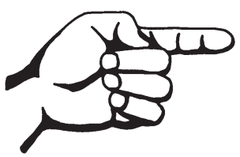

Platform Control Box Wiring Diagram, S-60

Ford Models

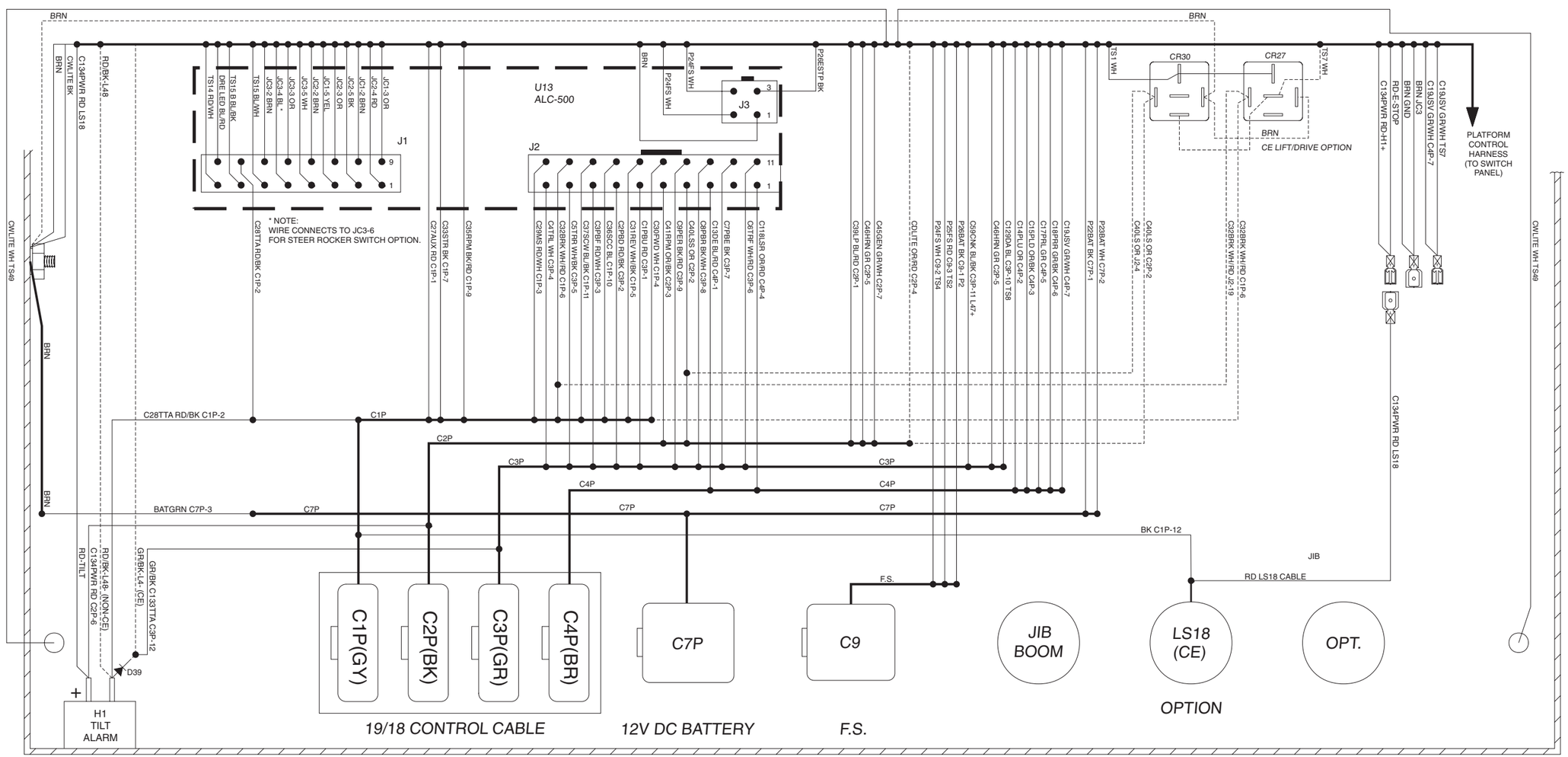

ITEM	DESCRIPTION
H1	TILT ALARM
C7P	12V DC PLATFORM POWER CONNECTOR
C9	FOOT SWITCH CONNECTOR
C1P-C4P	48 PIN CONNECTOR BLOCK
U13	ALC-500 CONTROL BOARD
J1	CONTROL BOARD INPUT CONNECTOR
J2	CONTROL BOARD OUTPUT CONNECTOR
J3	CONTROL BOARD POWER CONNECTOR
CR27	CONTROL RELAY (CE OPTION)
CR30	CONTROL RELAY (CE OPTION)
LS18	LOAD SENSE LIMIT SWITCH

Platform Control Box Switch Panel Wiring Diagram, S-60
Ford Models

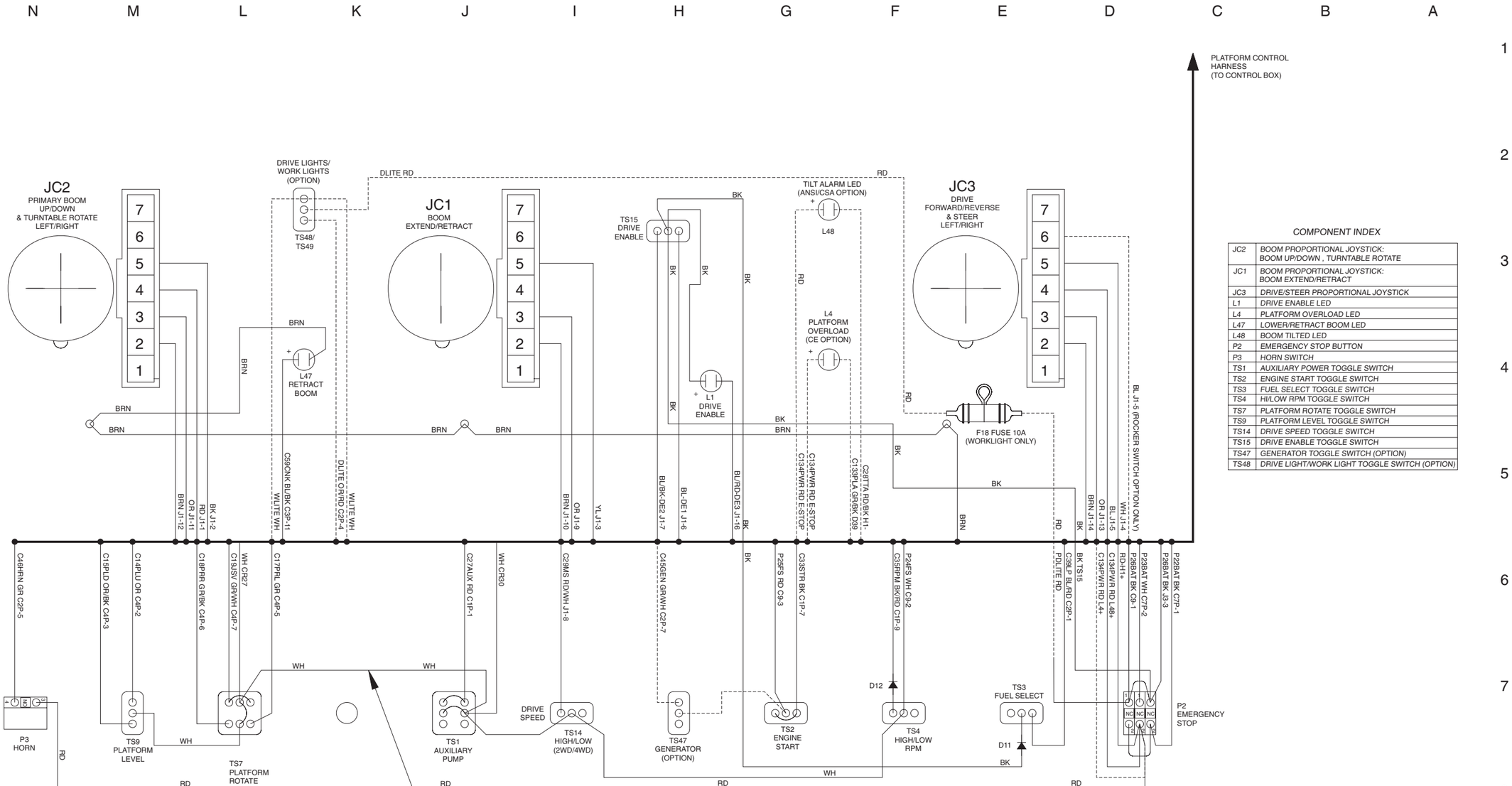

COMPONENT INDEX

JC2	*BOOM PROPORTIONAL JOYSTICK: BOOM UP/DOWN , TURNTABLE ROTATE*
JC1	*BOOM PROPORTIONAL JOYSTICK: BOOM EXTEND/RETRACT*
JC3	*DRIVE/STEER PROPORTIONAL JOYSTICK*
L1	*DRIVE ENABLE LED*
L4	*PLATFORM OVERLOAD LED*
L47	*LOWER/RETRACT BOOM LED*
L48	*BOOM TILTED LED*
P2	*EMERGENCY STOP BUTTON*
P3	*HORN SWITCH*
TS1	*AUXILIARY POWER TOGGLE SWITCH*
TS2	*ENGINE START TOGGLE SWITCH*
TS3	*FUEL SELECT TOGGLE SWITCH*
TS4	*HI/LOW RPM TOGGLE SWITCH*
TS7	*PLATFORM ROTATE TOGGLE SWITCH*
TS9	*PLATFORM LEVEL TOGGLE SWITCH*
TS14	*DRIVE SPEED TOGGLE SWITCH*
TS15	*DRIVE ENABLE TOGGLE SWITCH*
TS47	*GENERATOR TOGGLE SWITCH (OPTION)*
TS48	*DRIVE LIGHT/WORK LIGHT TOGGLE SWITCH (OPTION)*

NOTE: DASHED LINES INDICATE OPTION WIRES

CE LIFT/DRIVE OPTION, REPLACE WIRE WITH CR27 & CR30

Platform Control Box Switch Panel Wiring Diagram, S-60

Ford Models

Electrical Schematic, S-65

Ford LRG-425 EFI Models (before serial number 11880)

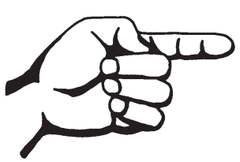

Electrical Schematic, S-65

Ford LRG-425 EFI Models (before serial number 11880)

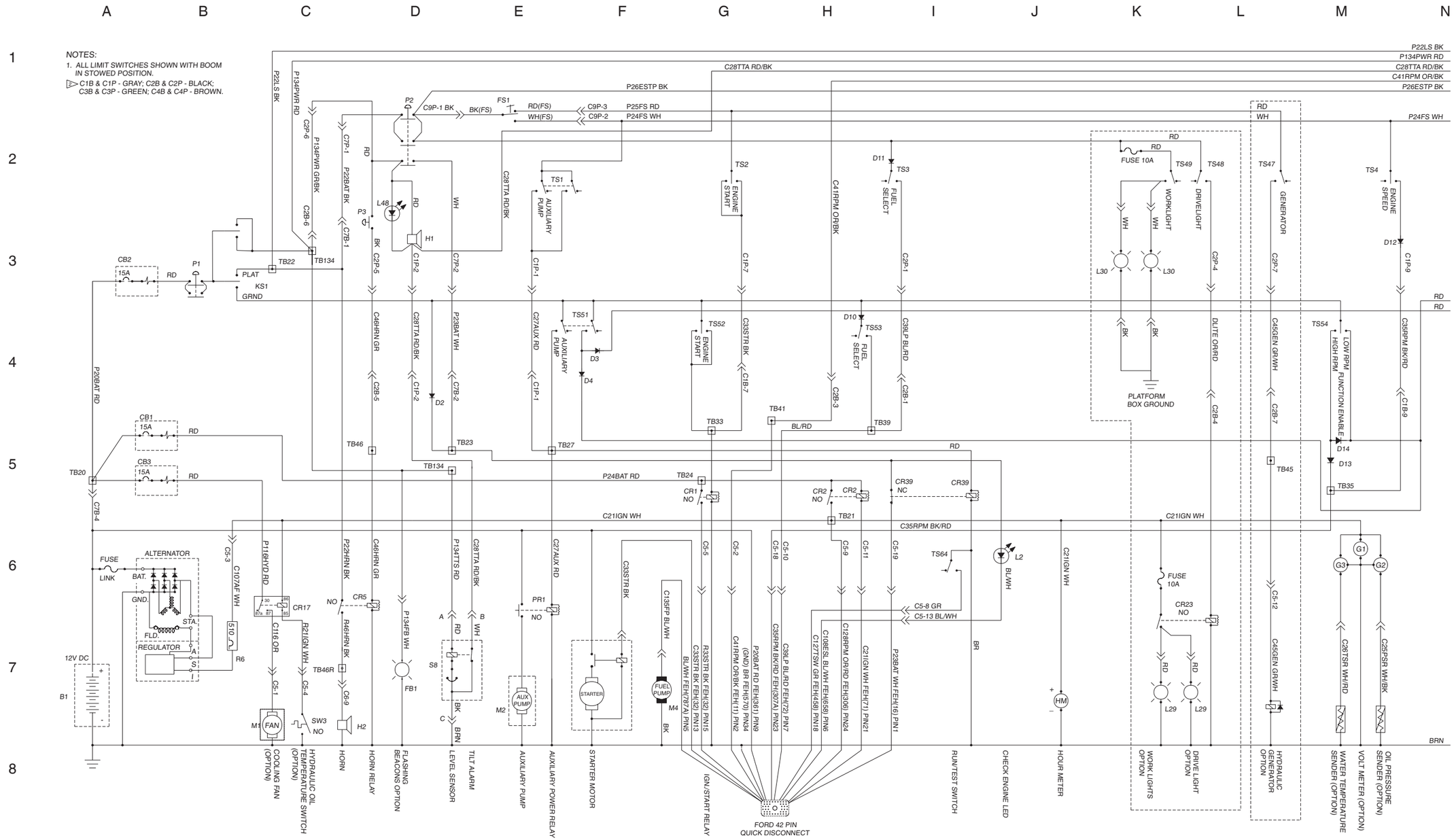

Electrical Schematic, S-65

Ford LRG-425 EFI Models (before serial number 11880)

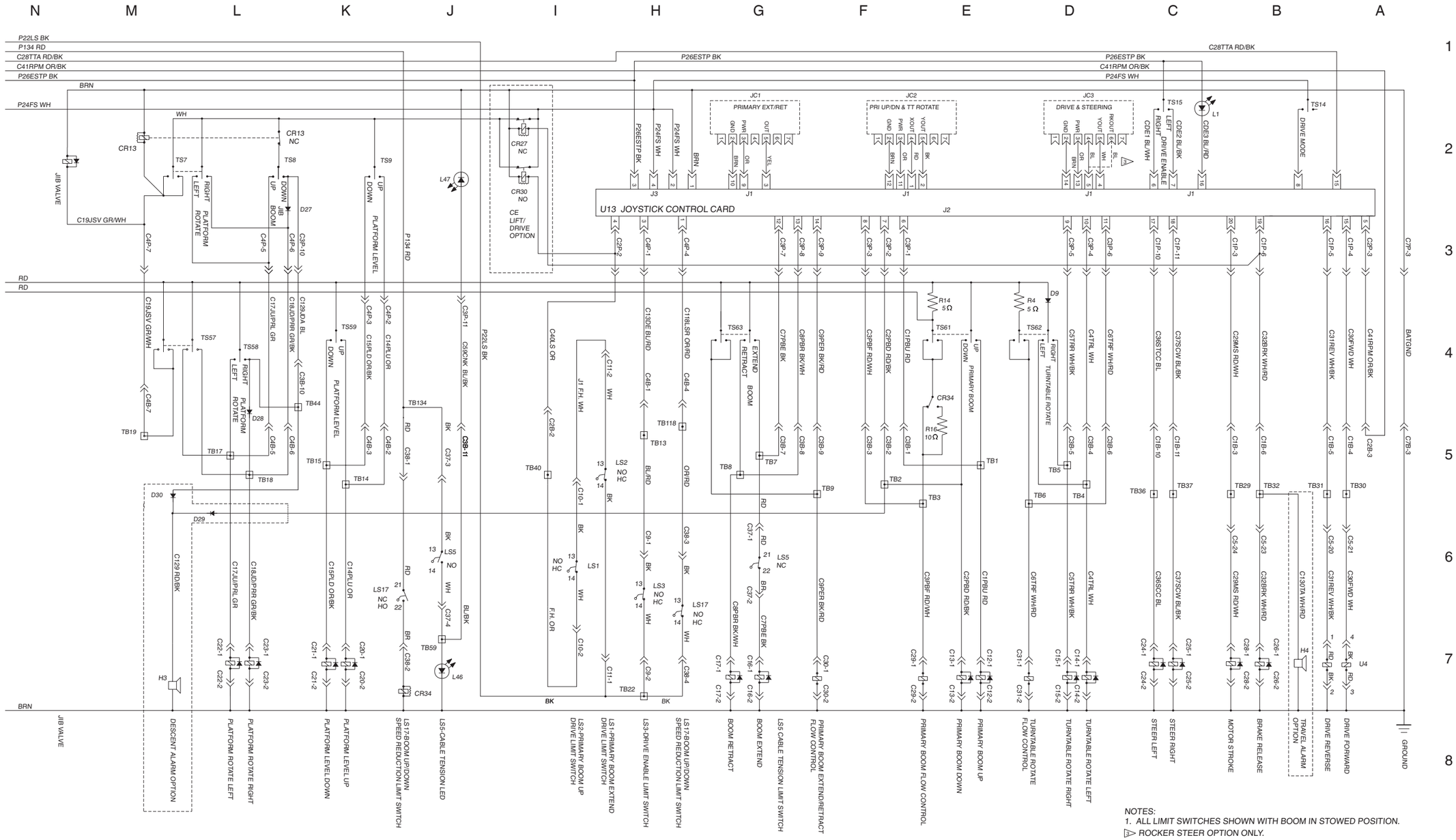

NOTES:
1. ALL LIMIT SWITCHES SHOWN WITH BOOM IN STOWED POSITION.
△ ROCKER STEER OPTION ONLY.

Electrical Schematic, S-65

Ford LRG-425 EFI Models (before serial number 11880)

Electrical Schematic, S-65

Ford LRG-425 EFI Models (from serial number 11880 to 14053)

Electrical Schematic, S-65

Ford LRG-425 EFI Models (from serial number 11880 to 14053)

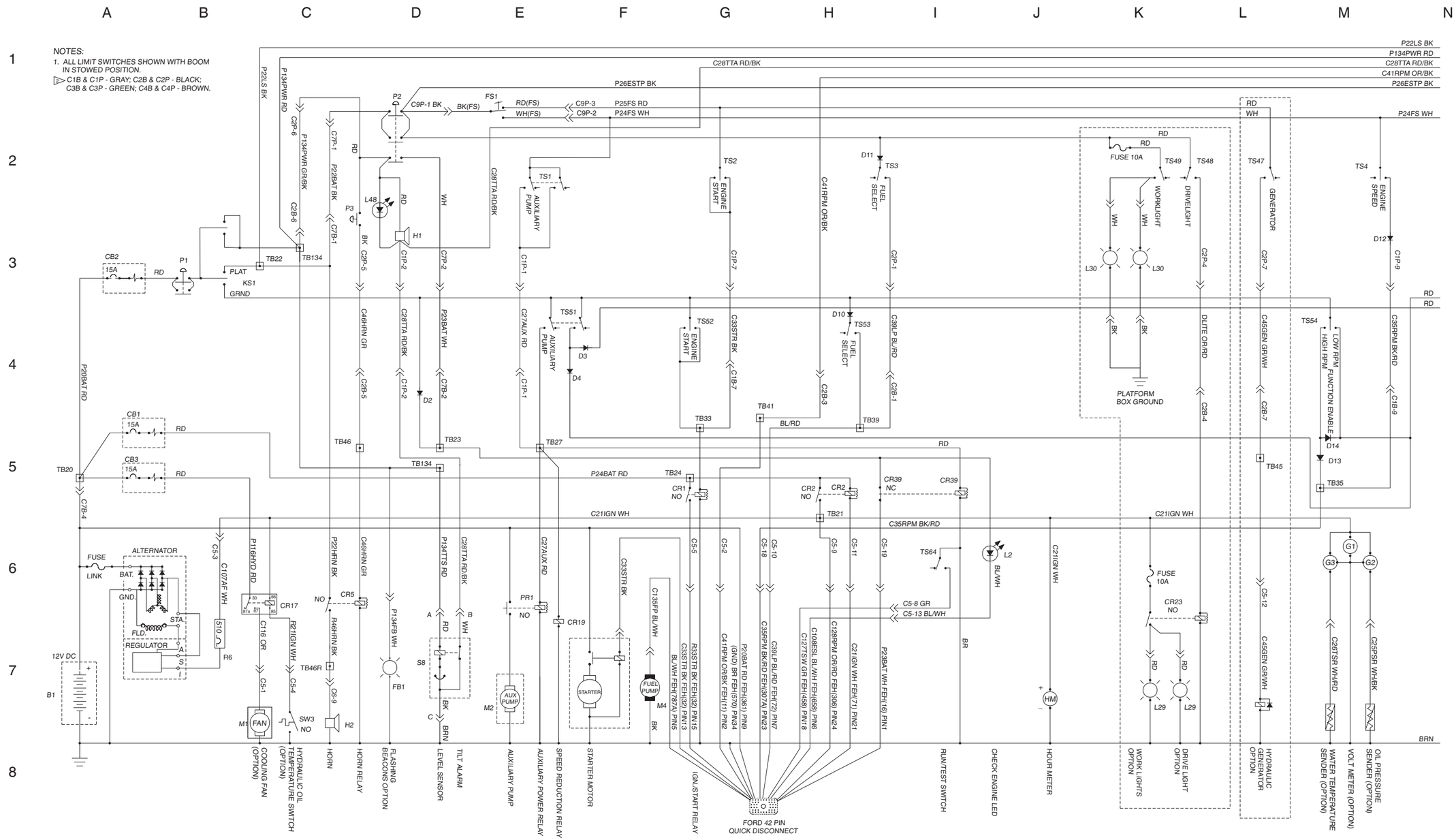

Electrical Schematic, S-65

Ford LRG-425 EFI Models (from serial number 11880 to 14053)

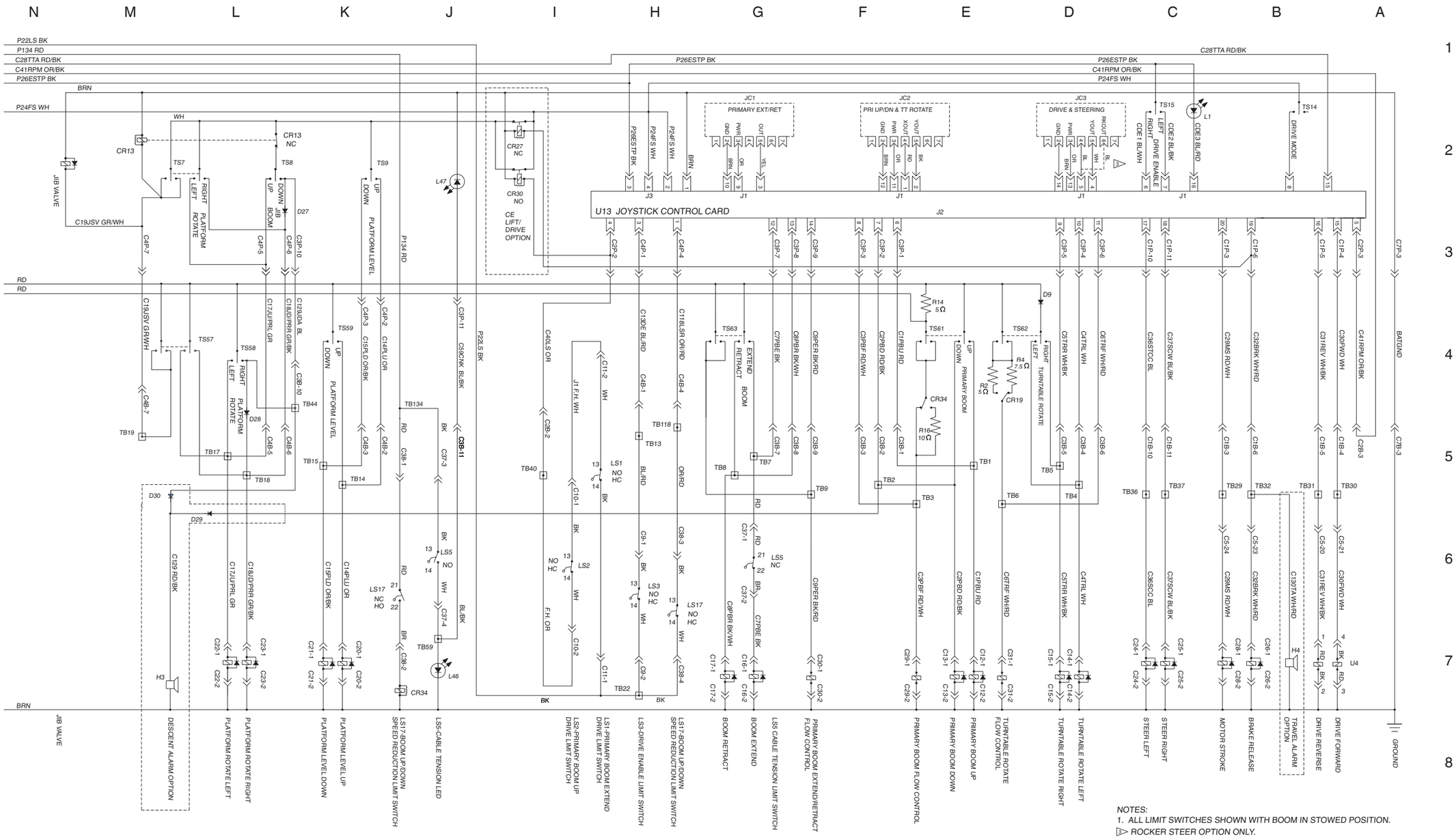

NOTES:
1. ALL LIMIT SWITCHES SHOWN WITH BOOM IN STOWED POSITION.
▷ ROCKER STEER OPTION ONLY.

Electrical Schematic, S-65

Ford LRG-425 EFI Models (from serial number 11880 to 14053)

Electrical Schematic, S-65

Ford DSG-423 EFI Models (after serial number 14053)

Electrical Schematic, S-65

Ford DSG-423 EFI Models (after serial number 14053)

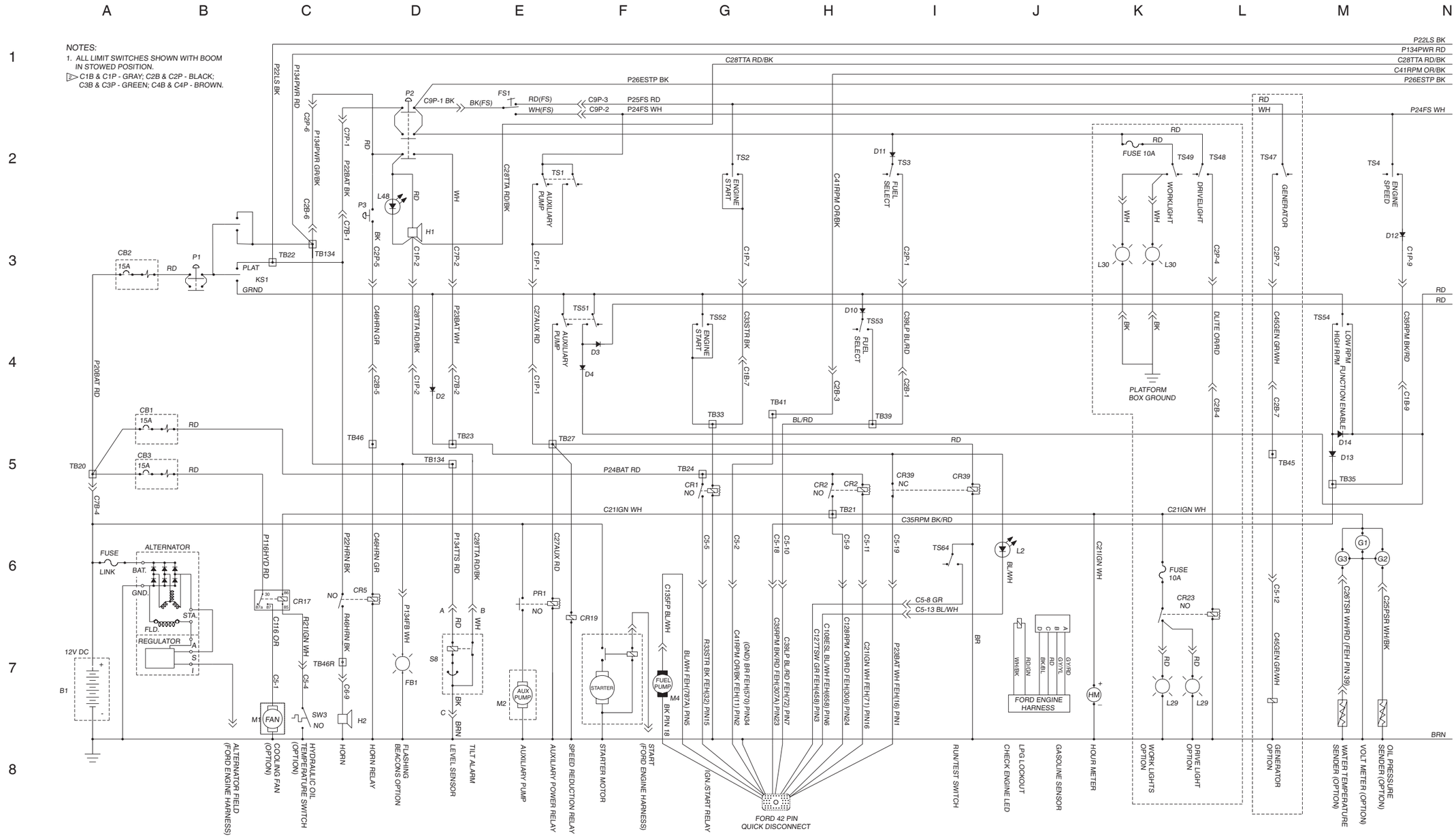

Electrical Schematic, S-65

Ford DSG-423 EFI Models (after serial number 14053)

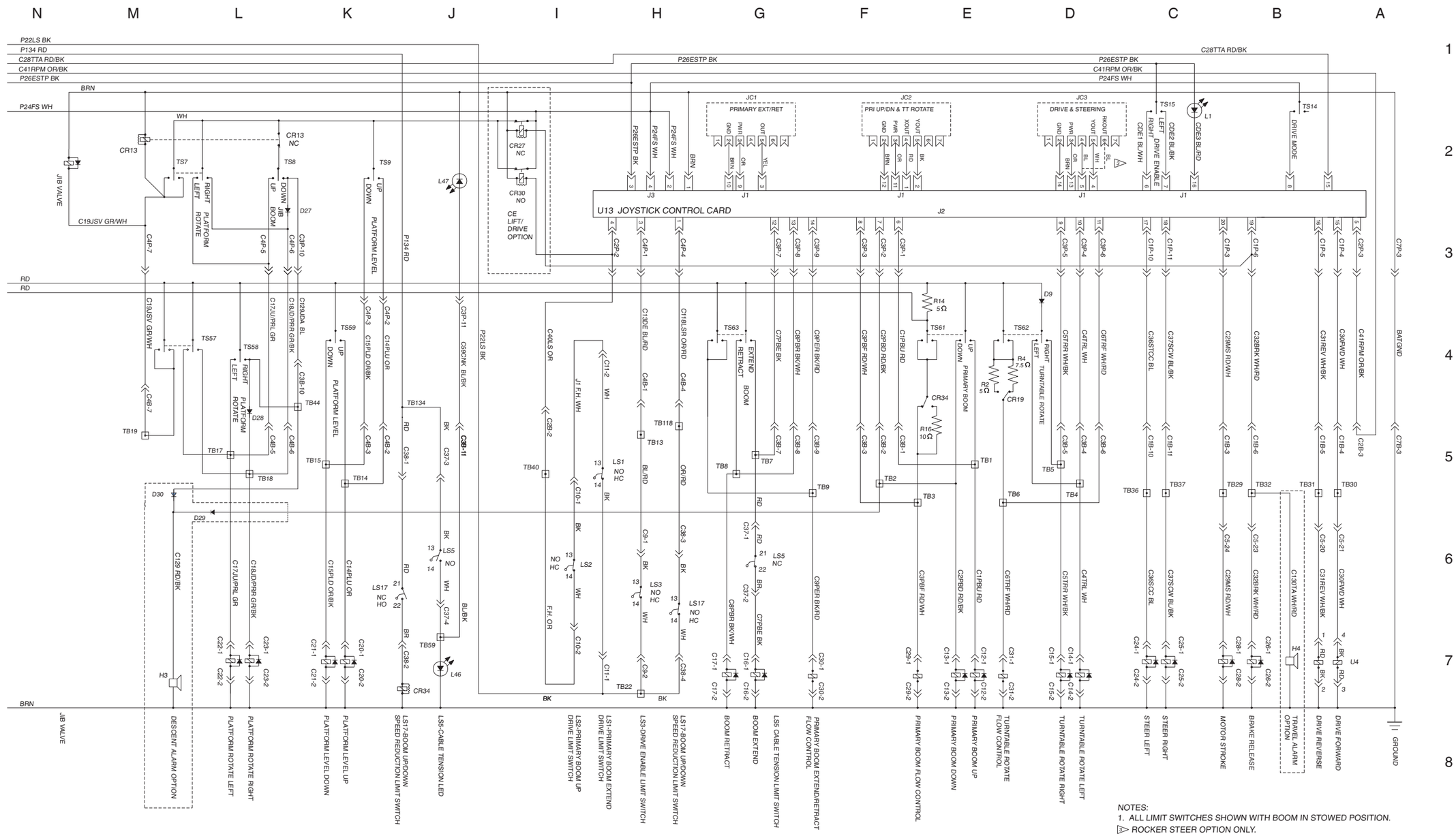

Electrical Schematic, S-65

Ford DSG-423 EFI Models (after serial number 14053)

Ground Control Box Terminal Strip Wiring Diagram, S-65

Ford LRG-425 EFI Models (before serial number 11880)

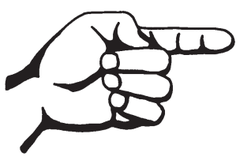

Ground Control Box Terminal Strip Wiring Diagram, S-65

Ford LRG-425 EFI Models (before serial number 11880)

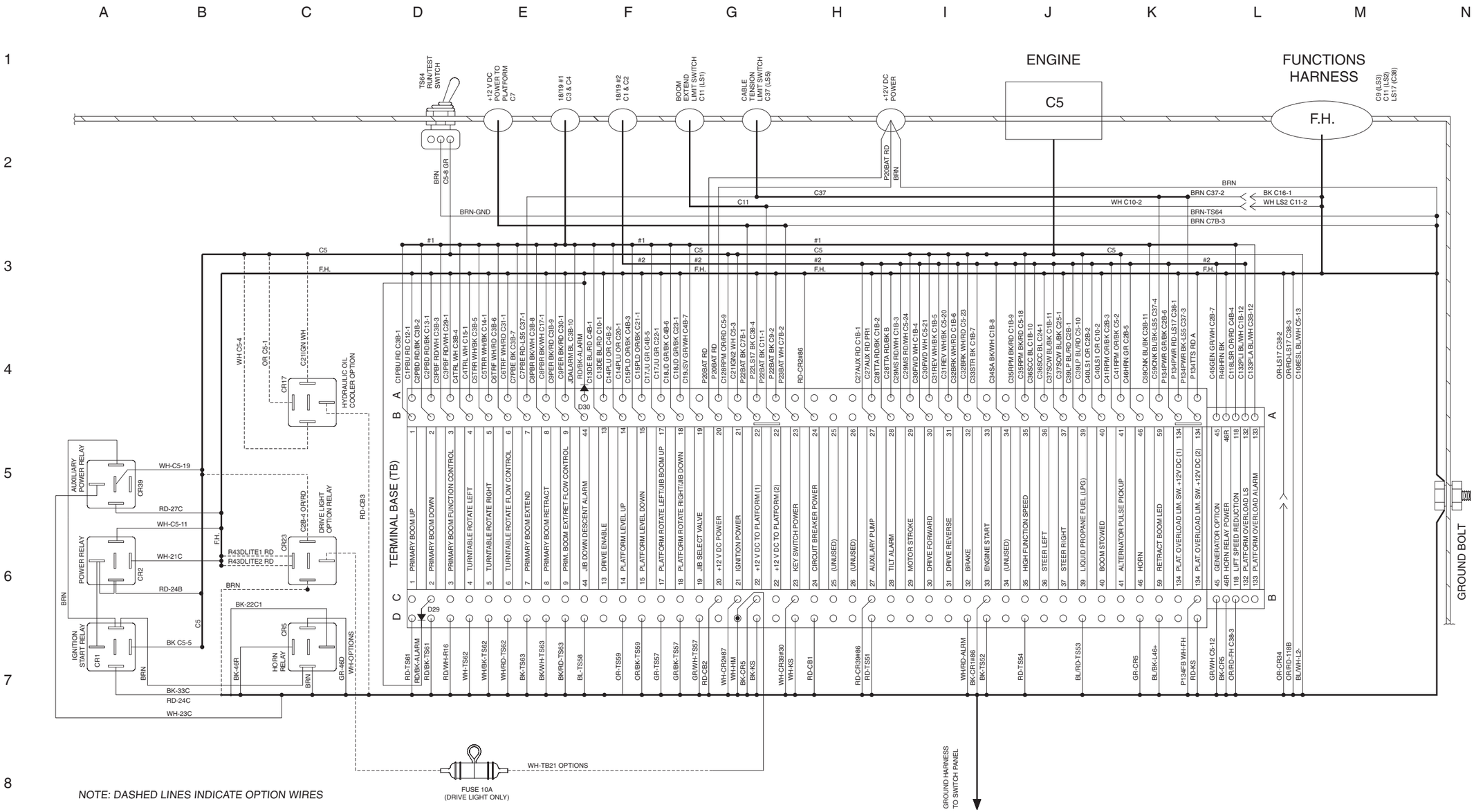

Ground Control Box Switch Panel Wiring Diagram, S-65

Ford LRG-425 EFI Models (before serial number 11880)

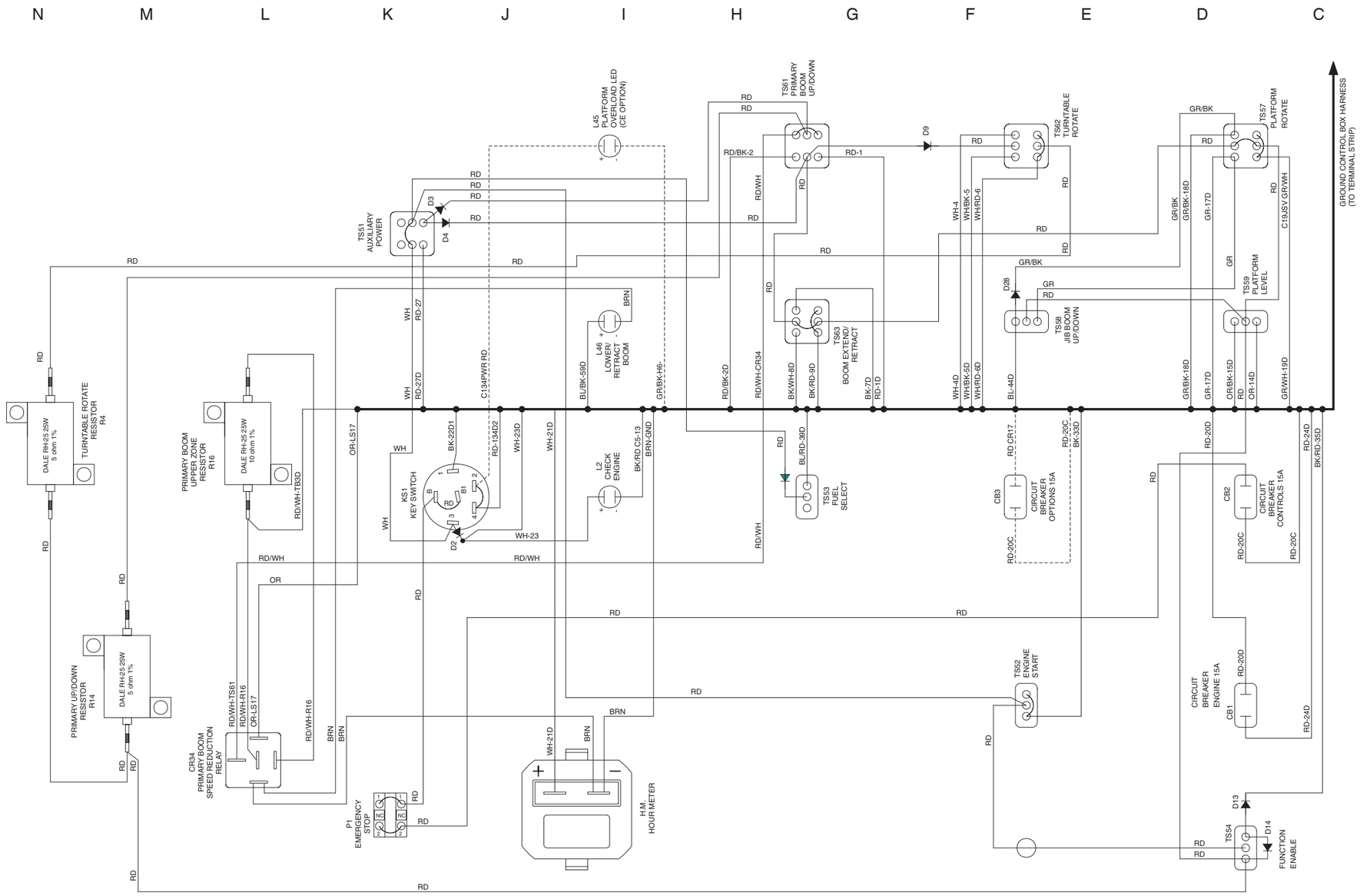

NOTE:
DASHED LINES INDICATE OPTION WIRES

LABEL	DESCRIPTION
CB1	CIRCUIT BREAKER, ENGINE, 15A
CB2	CIRCUIT BREAKER, CONTROLS, 15A
CB3	CIRCUIT BREAKER, OPTIONS, 15A
CR1	IGNITION / START RELAY
CR5	HORN RELAY
CR17	HYDRAULIC OIL COOLER FAN RELAY
CR23	DRIVE LIGHT RELAY (OPTION)
CR34	BOOM SPEED REDUCTION RELAY
CR39	AUXILIARY POWER RELAY
HM	HOUR METER
KS1	KEY SWITCH
L2	CHECK ENGINE LED
L46	LOWER/RETRACT BOOM LED
L45	PLATFORM OVERLOAD LED (CE OPTION)
P1	EMERGENCY STOP BUTTON
R4	SPEED LIMITING RESISTOR 5 OHMS
R14	SPEED LIMITING RESISTOR 5 OHMS
R16	SPEED LIMITING RESISTOR 10 OHMS
TS51	AUXILIARY POWER TOGGLE SWITCH
TS52	ENGINE START TOGGLE SWITCH
TS53	FUEL SELECT TOGGLE SWITCH
TS54	FUNCTION ENABLE TOGGLE SWITCH
TS57	PLATFORM ROTATE TOGGLE SWITCH
TS58	JIB BOOM UP/DOWN TOGGLE SWITCH
TS59	PLATFORM LEVEL TOGGLE SWITCH
TS61	PRIMARY BOOM UP/DOWN TOGGLE SWITCH
TS62	TURNTABLE ROTATE TOGGLE SWITCH
TS63	BOOM EXTEND/RETRACT TOGGLE SWITCH
TS64	RUN/TEST TOGGLE SWITCH

Ground Control Box Switch Panel Wiring Diagram, S-65

Ford LRG-425 EFI Models (before serial number 11880)

Ground Control Box Terminal Strip Wiring Diagram, S-65

Ford Models (after serial number 11879)

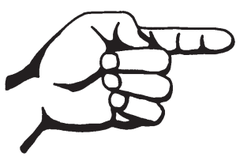

Ground Control Box Terminal Strip Wiring Diagram, S-65

Ford Models (after serial number 11879)

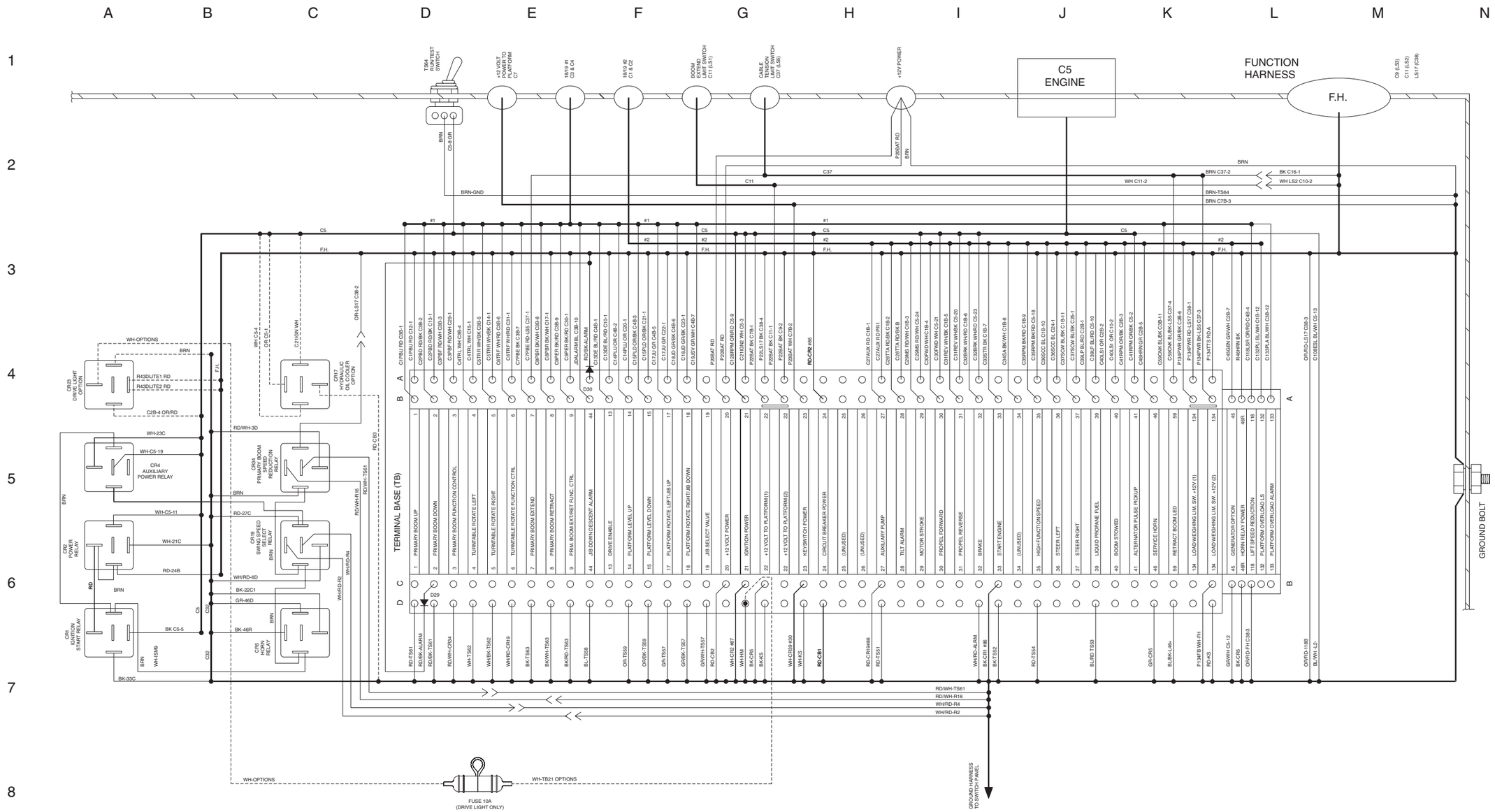

NOTE: DASHED LINES INDICATE OPTION WIRES

Ground Control Box Switch Panel Wiring Diagram, S-65

Ford Models (after serial number 11879)

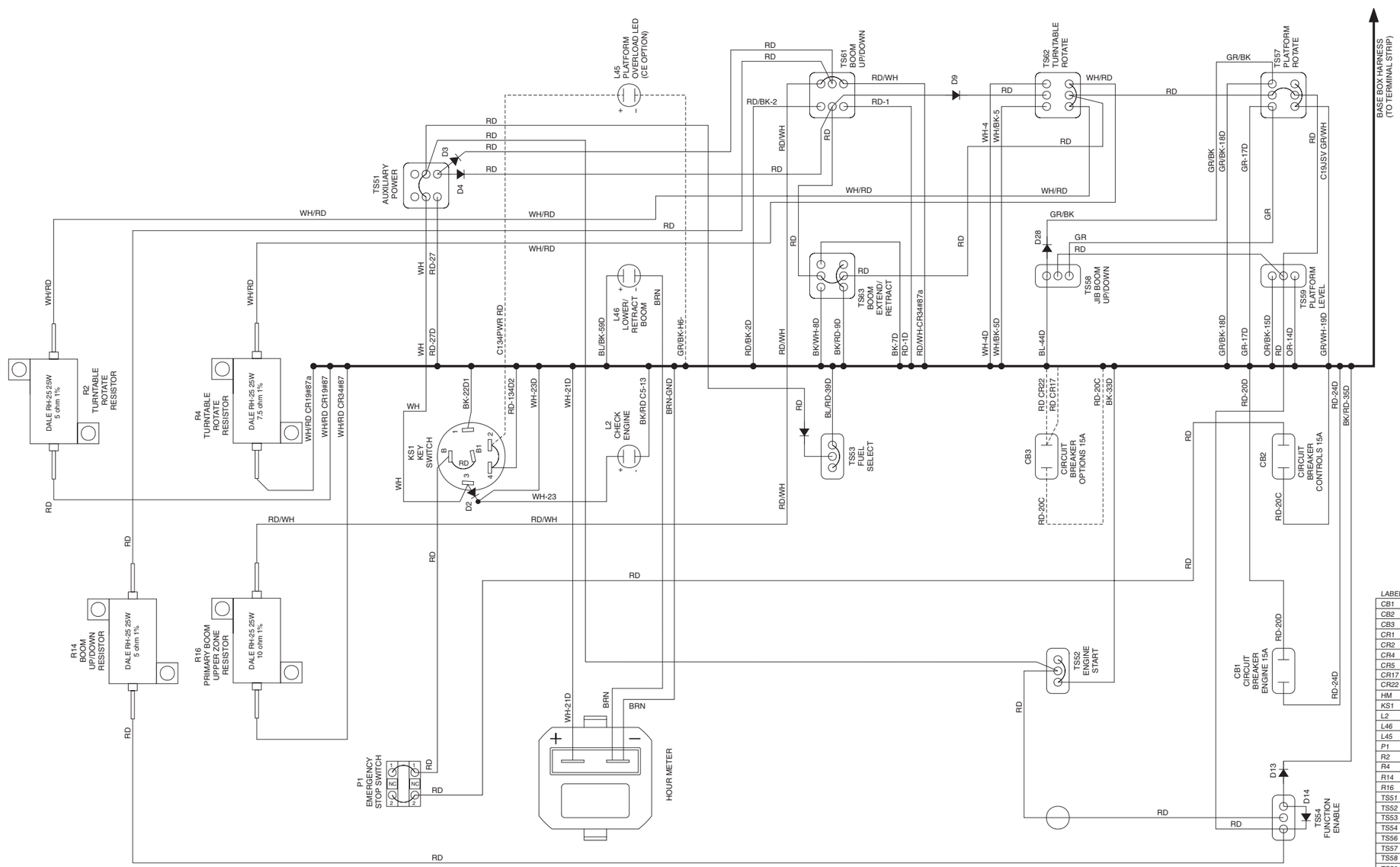

LABEL	DESCRIPTION
CB1	CIRCUIT BREAKER, ENGINE, 15A
CB2	CIRCUIT BREAKER, CONTROLS, 15A
CB3	CIRCUIT BREAKER, OPTIONS, 15A
CR1	IGNITION / START RELAY
CR2	IGNITION POWER RELAY
CR4	HIGH IDLE RELAY
CR5	HORN RELAY
CR17	HYDRAULIC OIL COOLER FAN RELAY
CR22	DRIVE LIGHT RELAY (OPTION)
HM	HOUR METER
KS1	KEY SWITCH
L2	CHECK ENGINE LED
L46	LOWER/RETRACT BOOM LED
L45	PLATFORM OVERLOAD LED (CE OPTION)
P1	EMERGENCY STOP BUTTON
R2	SPEED LIMITING RESISTOR 5 OHMS
R4	SPEED LIMITING RESISTOR 7.5 OHMS
R14	SPEED LIMITING RESISTOR 5 OHMS
R16	SPEED LIMITING RESISTOR 10 OHMS
TS51	AUXILIARY POWER TOGGLE SWITCH
TS52	ENGINE START TOGGLE SWITCH
TS53	FUEL SELECT TOGGLE SWITCH
TS54	FUNCTION ENABLE SWITCH
TS56	GLOW PLUG TOGGLE SWITCH
TS57	PLATFORM ROTATE TOGGLE SWITCH
TS58	JIB BOOM UP/DOWN TOGGLE SWITCH
TS59	PLATFORM LEVEL TOGGLE SWITCH
TS61	PRIMARY BOOM UP/DOWN TOGGLE SWITCH
TS62	TURNTABLE ROTATE TOGGLE SWITCH
TS63	BOOM EXTEND/RETRACT TOGGLE SWITCH

NOTE: DASHED LINES INDICATE OPTION WIRES

Ground Control Box Switch Panel Wiring Diagram, S-65

Ford Models (after serial number 11879)

Platform Control Box Wiring Diagram, S-65

Ford Models

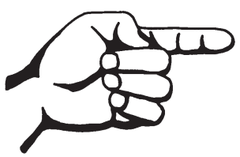

Platform Control Box Wiring Diagram, S-65

Ford Models

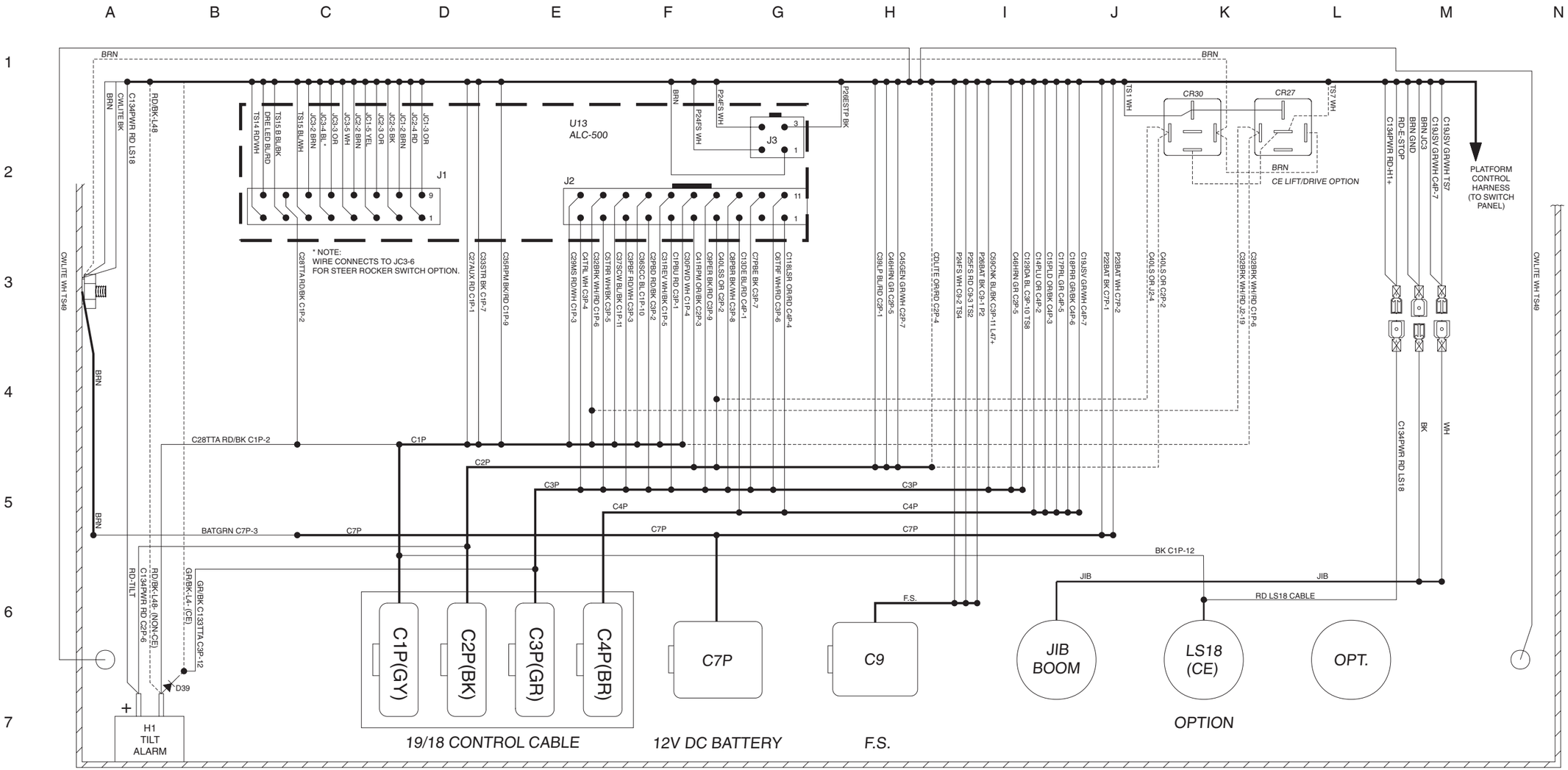

ITEM	DESCRIPTION
H1	TILT ALARM
C7P	12V DC PLATFORM POWER CONNECTOR
C9	FOOT SWITCH CONNECTOR
C1P-C4P	48 PIN CONNECTOR BLOCK
U13	ALC-500 CONTROL BOARD
J1	CONTROL BOARD INPUT CONNECTOR
J2	CONTROL BOARD OUTPUT CONNECTOR
J3	CONTROL BOARD POWER CONNECTOR
CR27	CONTROL RELAY (CE OPTION)
CR30	CONTROL RELAY (CE OPTION)
LS18	LOAD SENSE LIMIT SWITCH

Platform Control Box Switch Panel Wiring Diagram, S-65

Ford Models

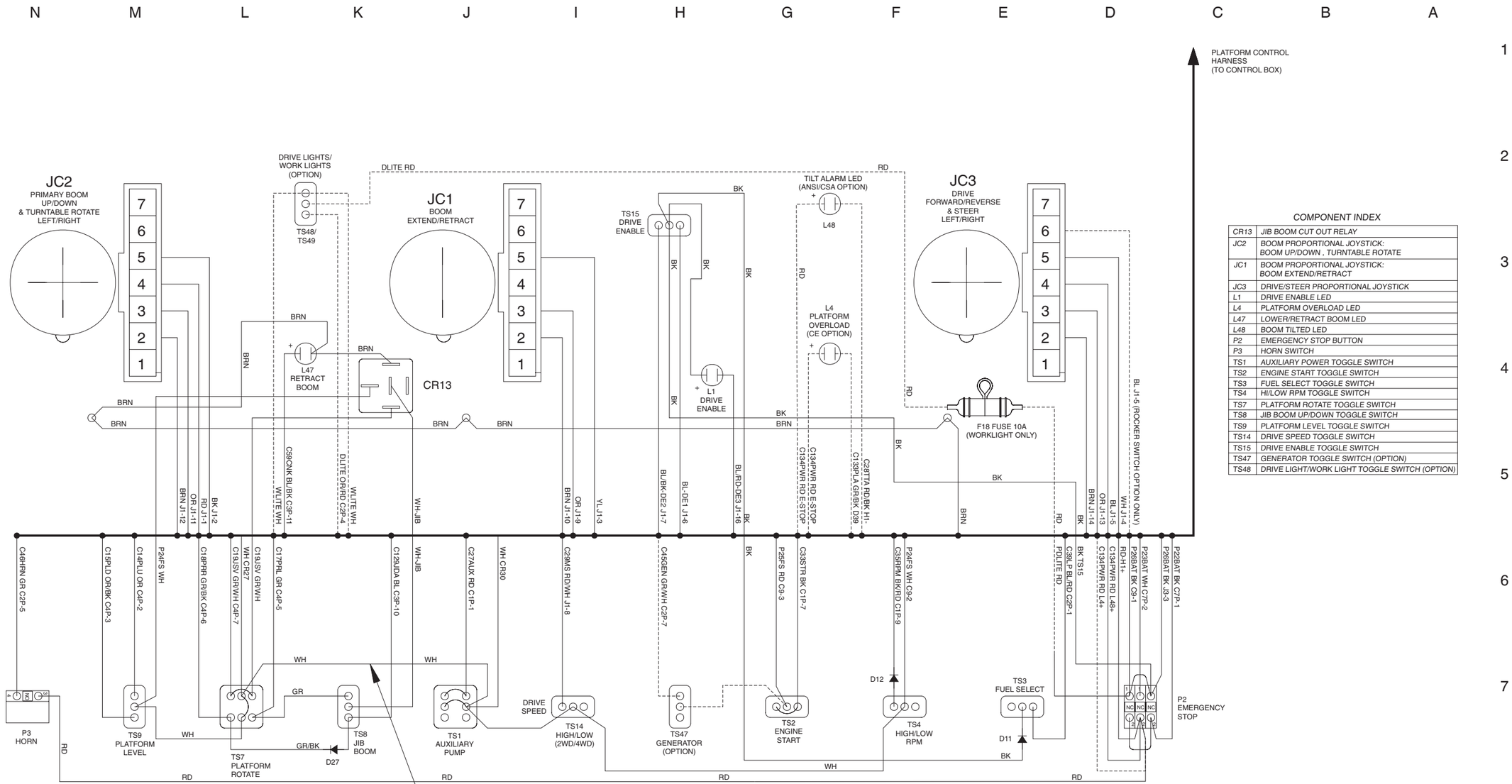

COMPONENT INDEX

CR13	JIB BOOM CUT OUT RELAY
JC2	BOOM PROPORTIONAL JOYSTICK: BOOM UP/DOWN , TURNTABLE ROTATE
JC1	BOOM PROPORTIONAL JOYSTICK: BOOM EXTEND/RETRACT
JC3	DRIVE/STEER PROPORTIONAL JOYSTICK
L1	DRIVE ENABLE LED
L4	PLATFORM OVERLOAD LED
L47	LOWER/RETRACT BOOM LED
L48	BOOM TILTED LED
P2	EMERGENCY STOP BUTTON
P3	HORN SWITCH
TS1	AUXILIARY POWER TOGGLE SWITCH
TS2	ENGINE START TOGGLE SWITCH
TS3	FUEL SELECT TOGGLE SWITCH
TS4	HI/LOW RPM TOGGLE SWITCH
TS7	PLATFORM ROTATE TOGGLE SWITCH
TS8	JIB BOOM UP/DOWN TOGGLE SWITCH
TS9	PLATFORM LEVEL TOGGLE SWITCH
TS14	DRIVE SPEED TOGGLE SWITCH
TS15	DRIVE ENABLE TOGGLE SWITCH
TS47	GENERATOR TOGGLE SWITCH (OPTION)
TS48	DRIVE LIGHT/WORK LIGHT TOGGLE SWITCH (OPTION)

Platform Control Box Switch Panel Wiring Diagram, S-65

Ford Models

Electrical Schematic, S-60

Deutz F3L-2011 Models (before serial number 11880)

Electrical Schematic, S-60

Deutz F3L-2011 Models (before serial number 11880)

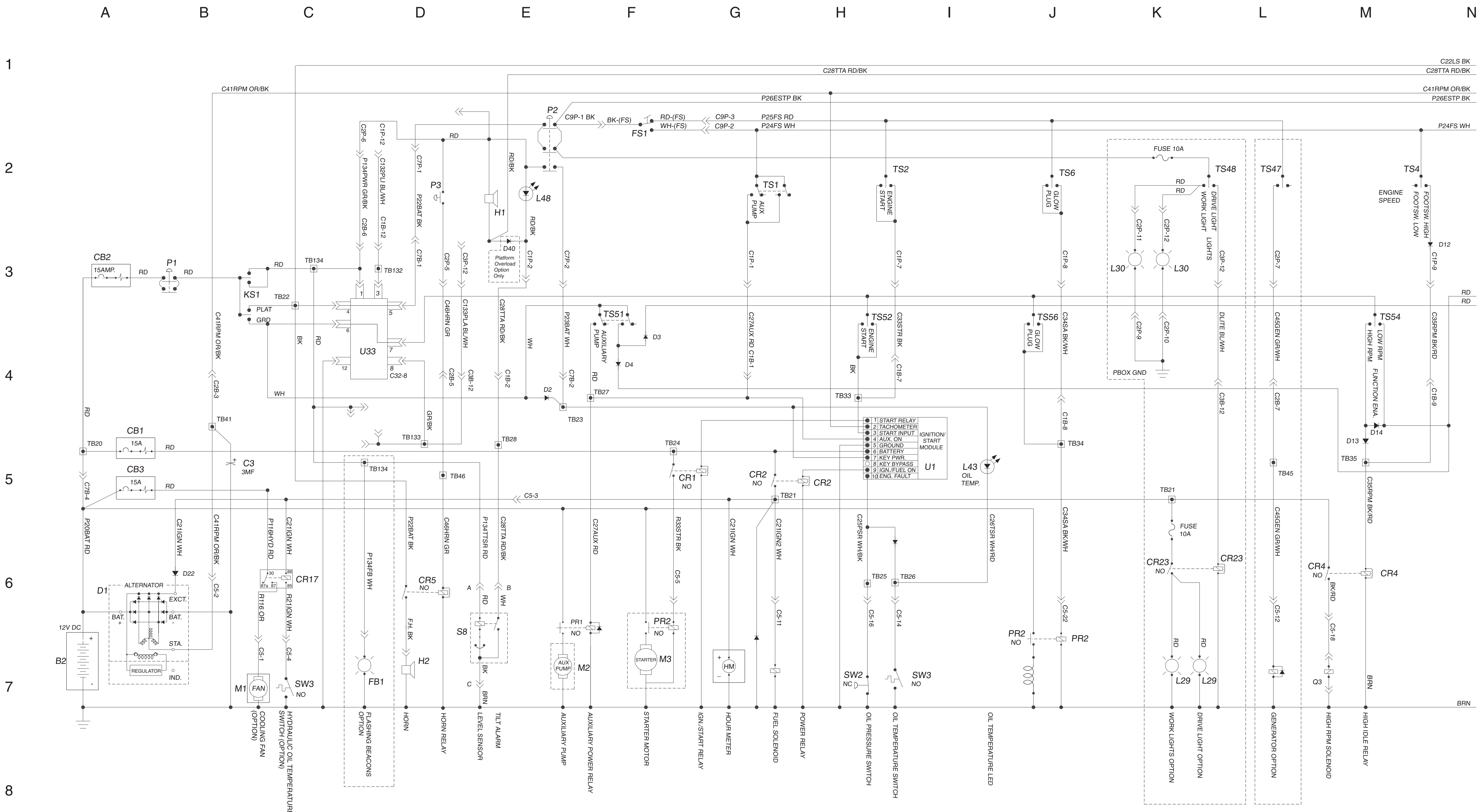

NOTES:
1 CE AND PLATFORM OVERLOAD OPTION ONLY.

Electrical Schematic, S-60

Deutz F3L-2011 Models (before serial number 11880)

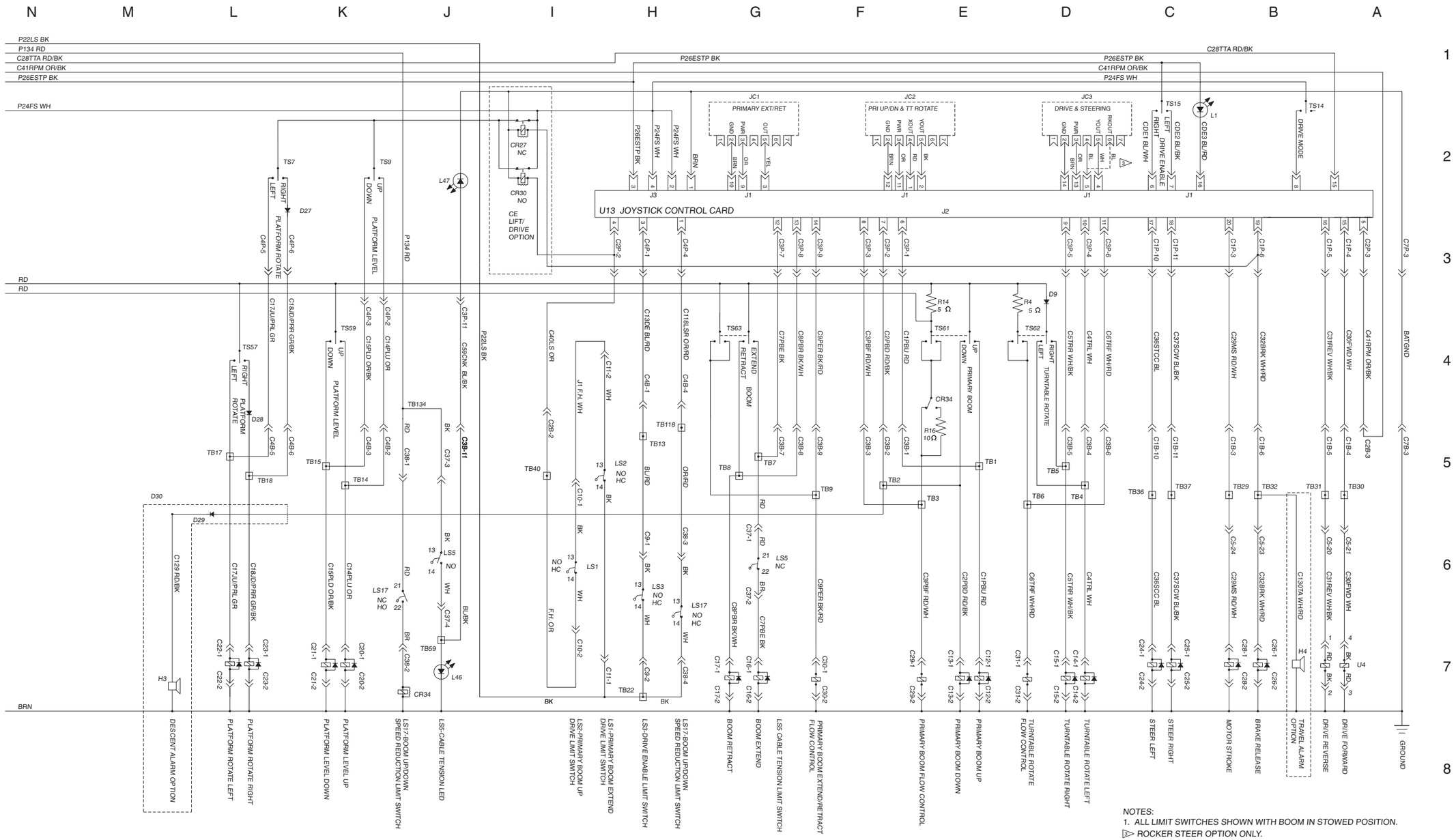

Electrical Schematic, S-60

Deutz F3L-2011 Models (before serial number 11880)

Electrical Schematic, S-60

Deutz F3L-2011 Models (after serial number 11879)

Electrical Schematic, S-60

Deutz F3L-2011 Models (after serial number 11879)

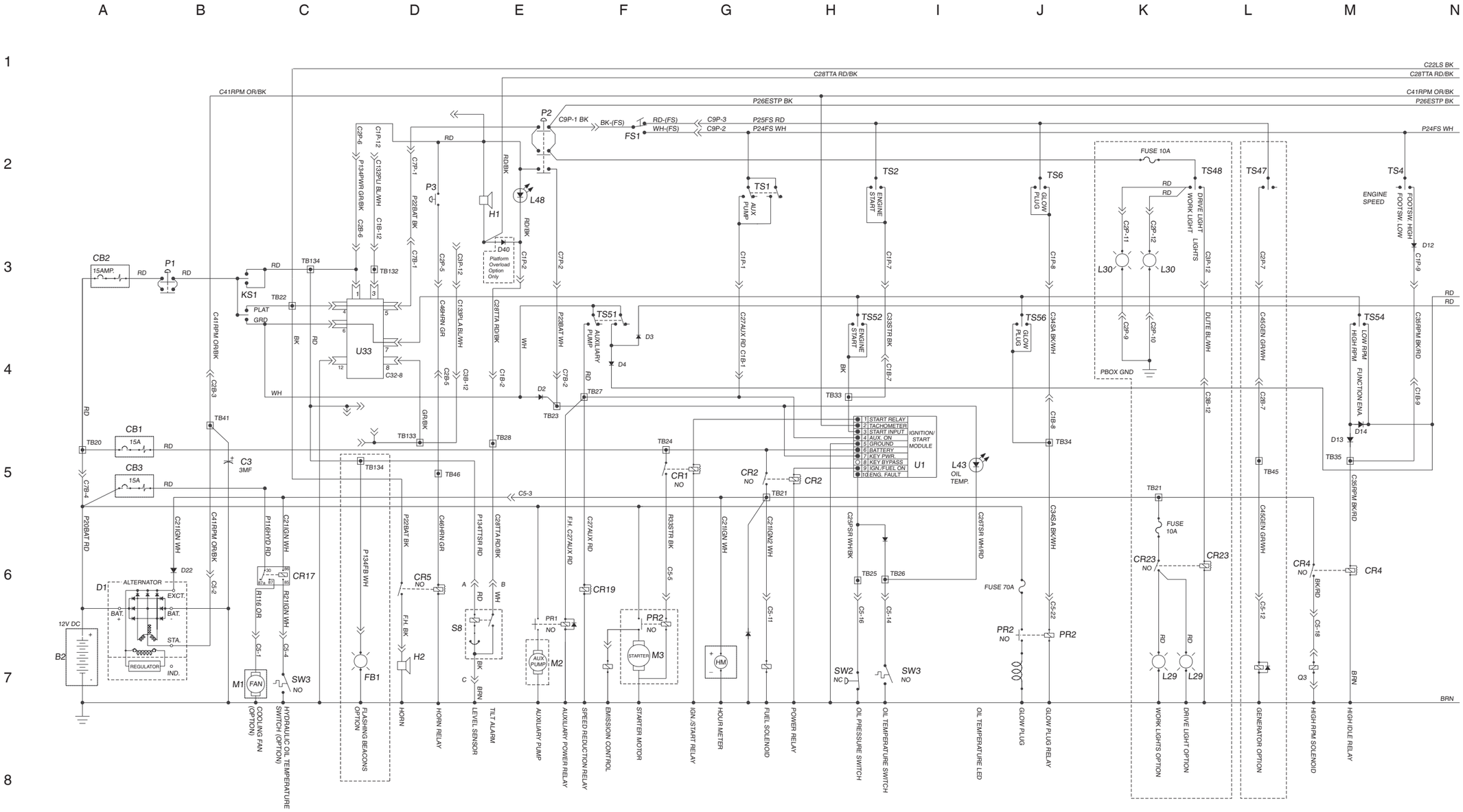

NOTES:
CE AND PLATFORM OVERLOAD OPTION ONLY.

Electrical Schematic, S-60

Deutz F3L-2011 Models (after serial number 11879)

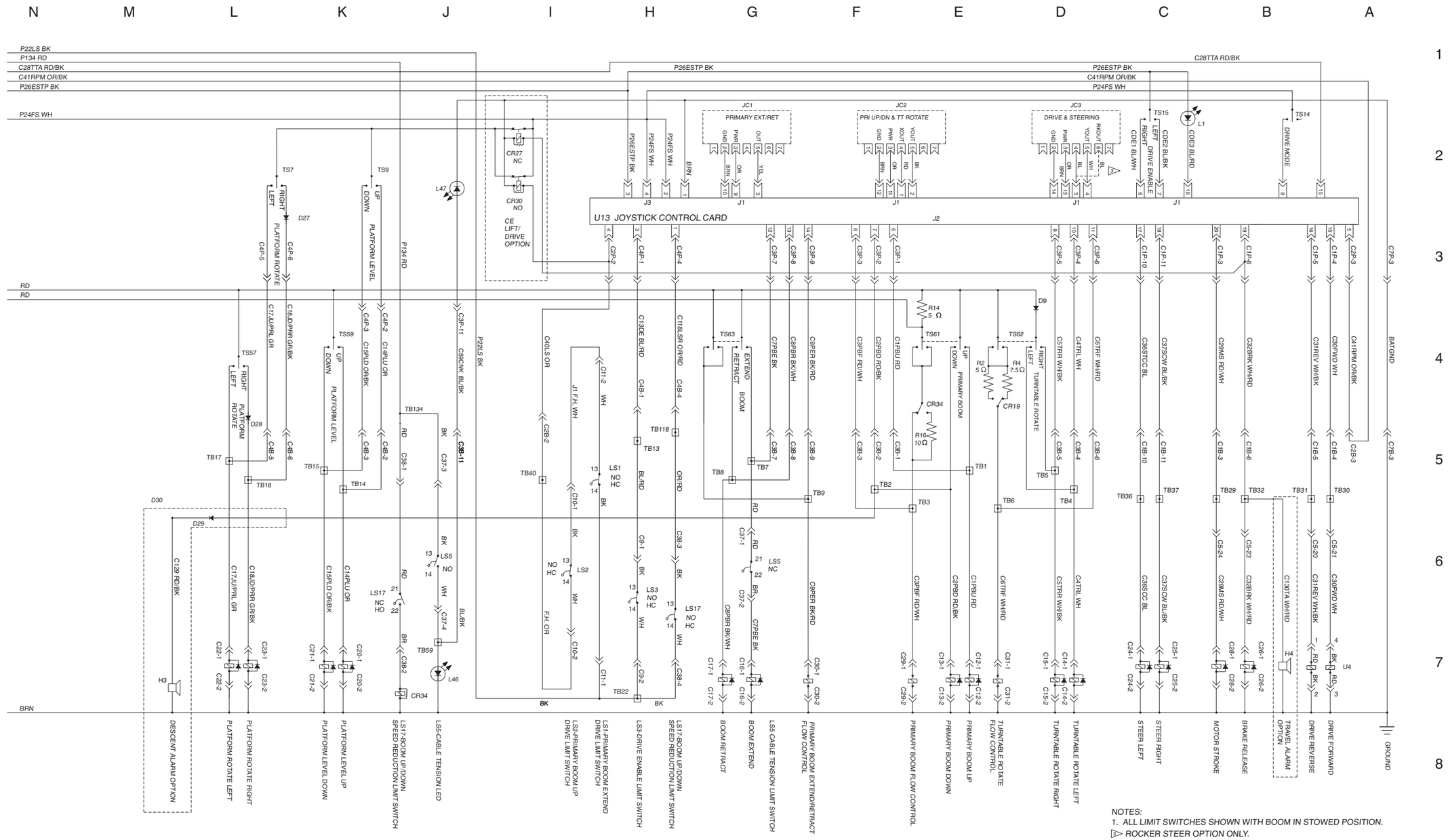

NOTES:
1. ALL LIMIT SWITCHES SHOWN WITH BOOM IN STOWED POSITION.
▷ ROCKER STEER OPTION ONLY.

Electrical Schematic, S-60

Deutz F3L-2011 Models (after serial number 11879)

Electrical Schematic, S-60, CE Models

Deutz F3L-2011 Models (before serial number 11880)

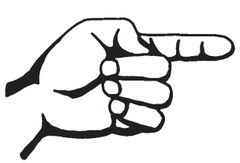

Electrical Schematic, S-60, CE Models

Deutz F3L-2011 Models (before serial number 11880)

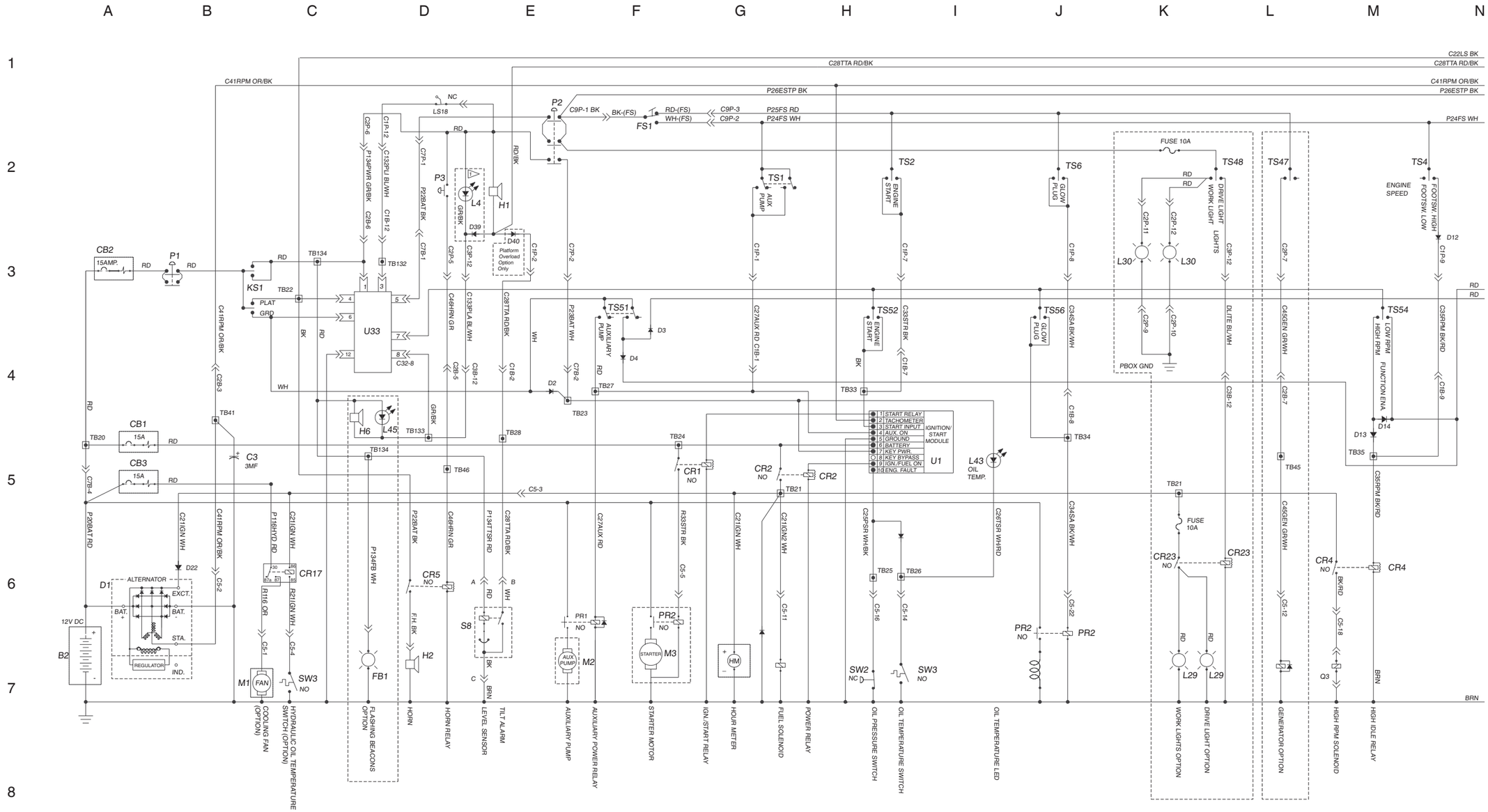

NOTES:
CE AND PLATFORM OVERLOAD OPTION ONLY.

Electrical Schematic, S-60, CE Models

Deutz F3L-2011 Models (before serial number 11880)

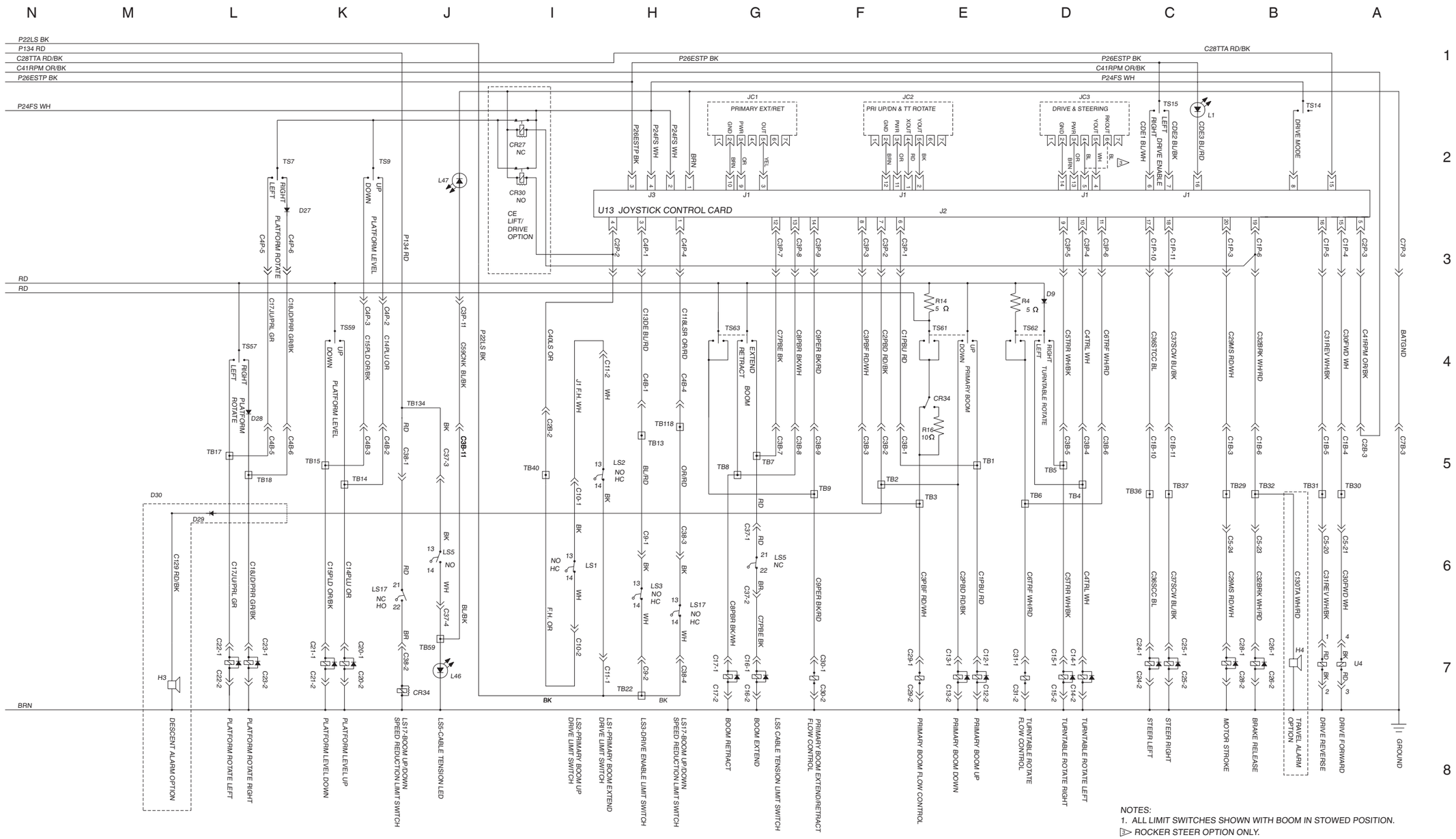

NOTES:
1. ALL LIMIT SWITCHES SHOWN WITH BOOM IN STOWED POSITION.
▷ ROCKER STEER OPTION ONLY.

Electrical Schematic, S-60, CE Models

Deutz F3L-2011 Models (before serial number 11880)

Electrical Schematic, S-60, CE Models

Deutz F3L-2011 Models (after serial number 11879)

Electrical Schematic, S-60, CE Models

Deutz F3L-2011 Models (after serial number 11879)

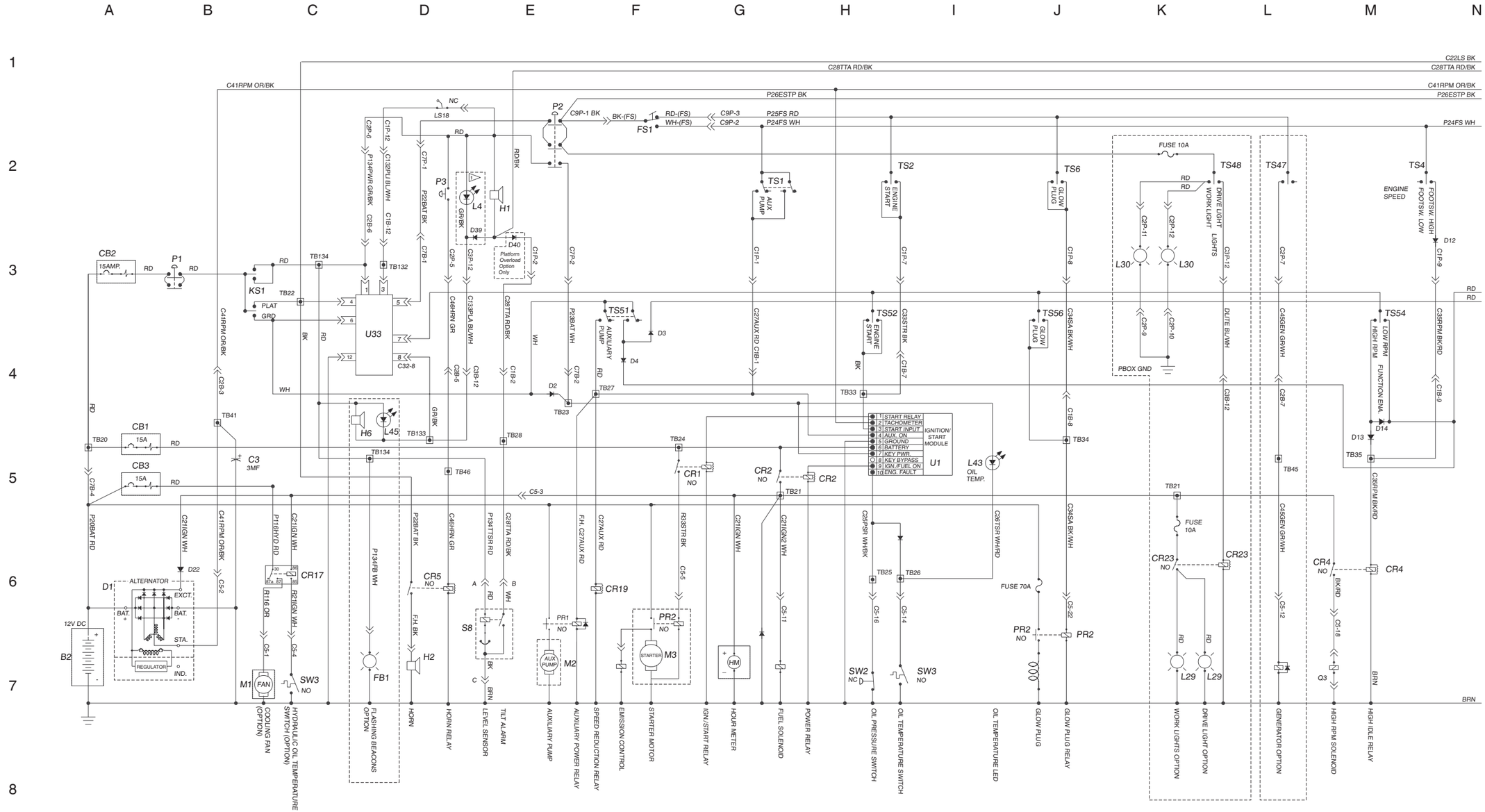

NOTES:
▷ CE AND PLATFORM OVERLOAD OPTION ONLY.

Electrical Schematic, S-60, CE Models

Deutz F3L-2011 Models (after serial number 11879)

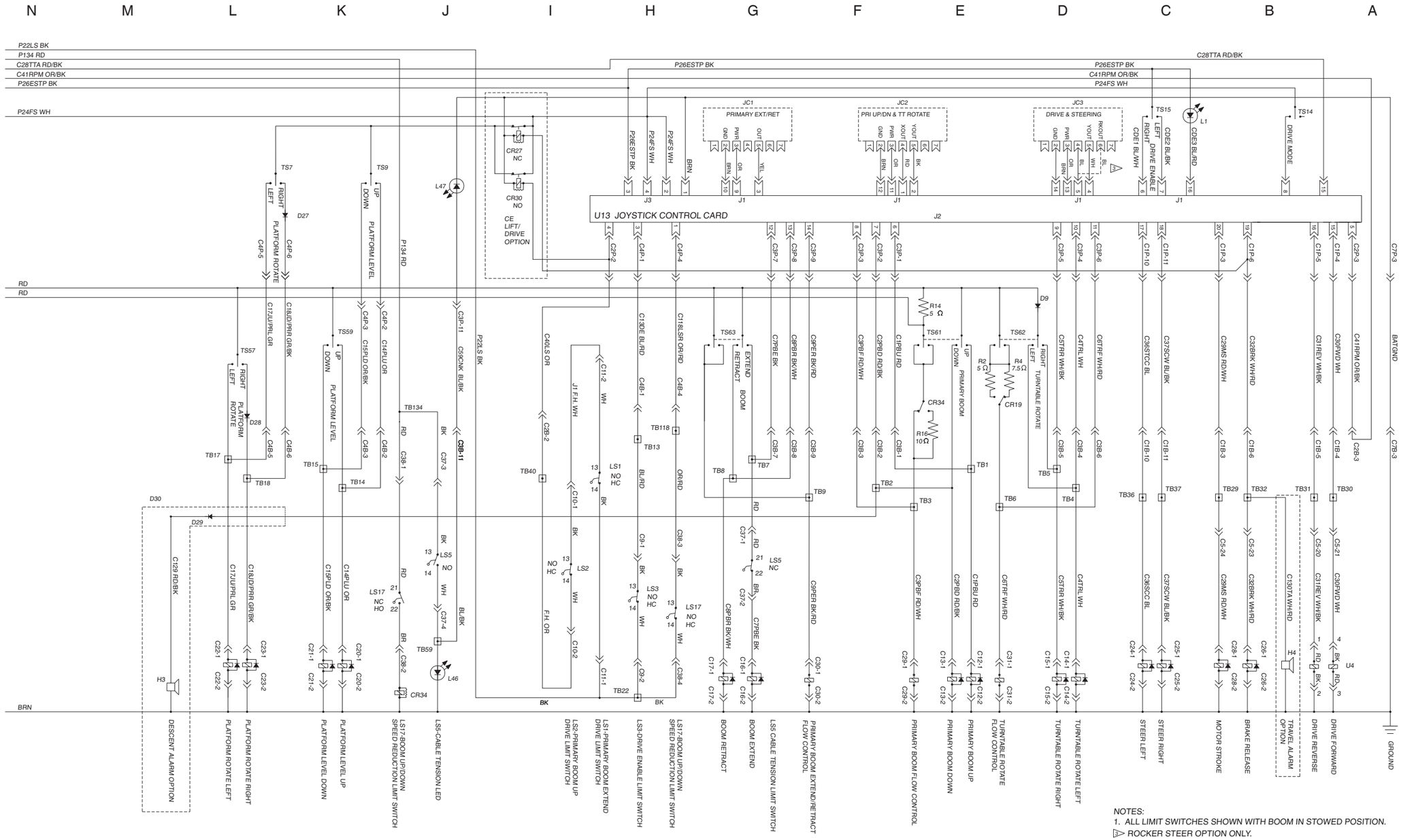

NOTES:
1. ALL LIMIT SWITCHES SHOWN WITH BOOM IN STOWED POSITION.
▷ ROCKER STEER OPTION ONLY.

Electrical Schematic, S-60, CE Models

Deutz F3L-2011 Models (after serial number 11879)

Ground Control Box Terminal Strip Wiring Diagram, S-60

Deutz F3L-2011 Models (before serial number 11880)

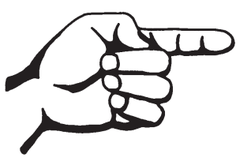

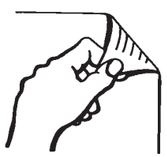

Ground Control Box Terminal Strip Wiring Diagram, S-60

Deutz F3L-2011 Models (before serial number 11880)

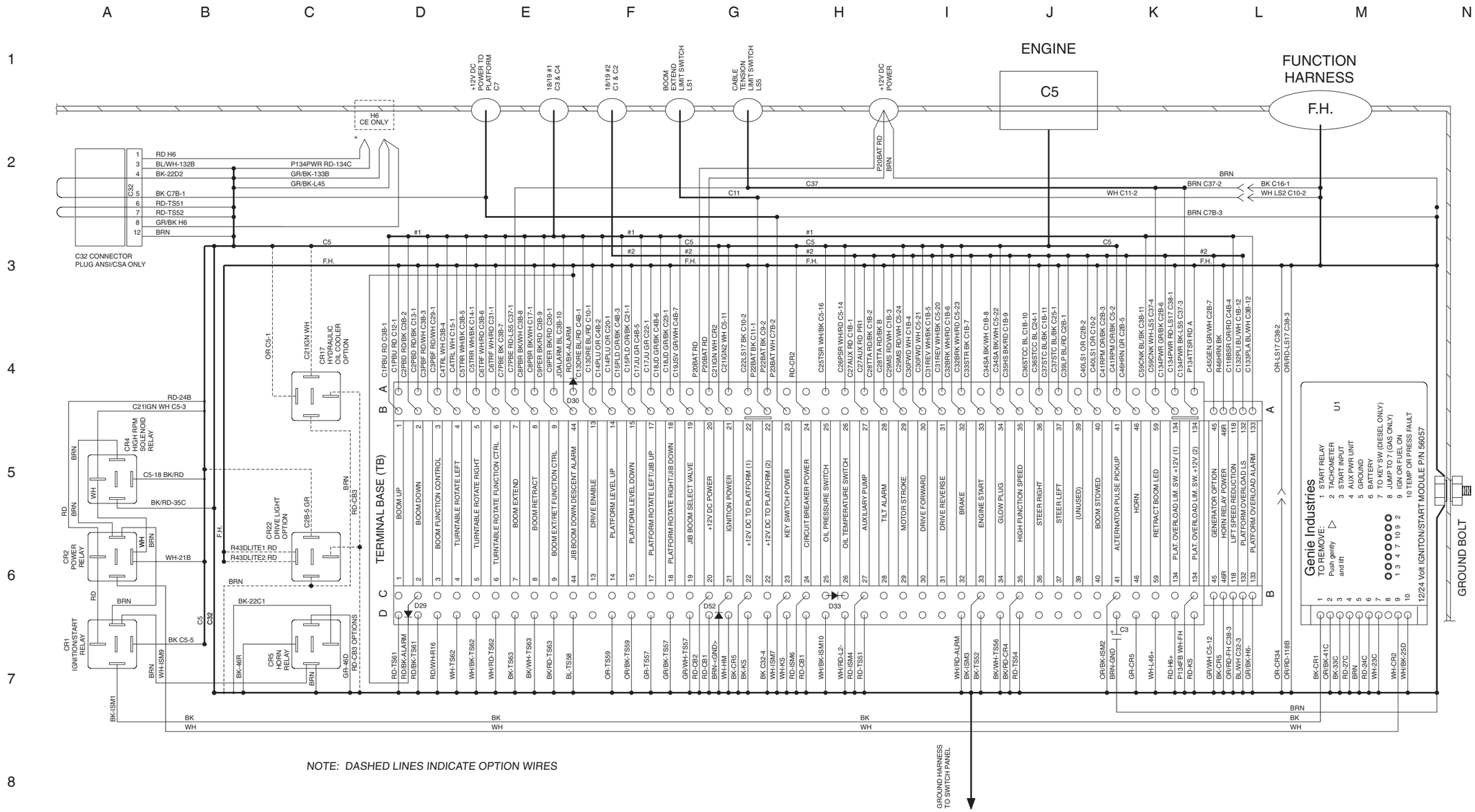

NOTE: DASHED LINES INDICATE OPTION WIRES

Ground Control Box Switch Panel Wiring Diagram, S-60

Deutz F3L-2011 Models (before serial number 11880)

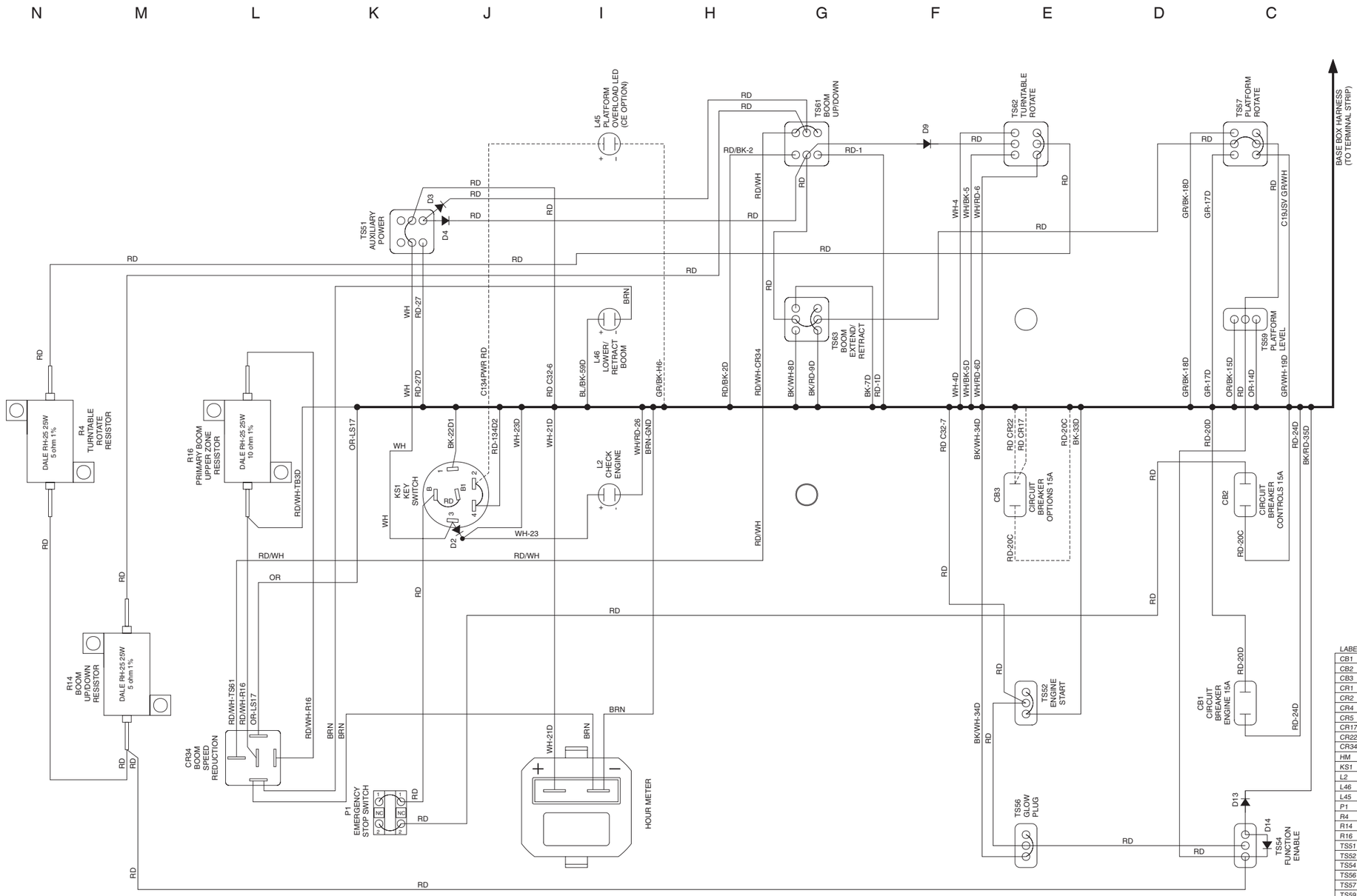

NOTE: DASHED LINES INDICATE OPTION WIRES

LABEL	DESCRIPTION
CB1	CIRCUIT BREAKER, ENGINE, 15A
CB2	CIRCUIT BREAKER, CONTROLS, 15A
CB3	CIRCUIT BREAKER, OPTIONS, 15A
CR1	IGNITION / START RELAY
CR2	IGNITION POWER RELAY
CR4	HIGH IDLE RELAY
CR5	HORN RELAY
CR17	HYDRAULIC OIL COOLER FAN RELAY
CR22	DRIVE LIGHT RELAY (OPTION)
CR34	BOOM SPEED REDUCTION RELAY
HM	HOUR METER
KS1	KEY SWITCH
L2	CHECK ENGINE LED
L46	LOWER/RETRACT BOOM LED
L45	PLATFORM OVERLOAD LED (CE OPTION)
P1	EMERGENCY STOP BUTTON
R4	SPEED LIMITING RESISTOR 5 OHMS
R14	SPEED LIMITING RESISTOR 5 OHMS
R16	SPEED LIMITING RESISTOR 10 OHMS
TS51	AUXILIARY POWER TOGGLE SWITCH
TS52	ENGINE START TOGGLE SWITCH
TS54	FUNCTION ENABLE SWITCH
TS56	GLOW PLUG TOGGLE SWITCH
TS57	PLATFORM ROTATE TOGGLE SWITCH
TS59	PLATFORM LEVEL TOGGLE SWITCH
TS61	PRIMARY BOOM UP/DOWN TOGGLE SWITCH
TS62	TURNTABLE ROTATE TOGGLE SWITCH
TS63	BOOM EXTEND/RETRACT TOGGLE SWITCH

Ground Control Box Switch Panel Wiring Diagram, S-60

Deutz F3L-2011 Models (before serial number 11880)

Ground Control Box Terminal Strip Wiring Diagram, S-60

Deutz F3L-2011 Models (after serial number 11879)

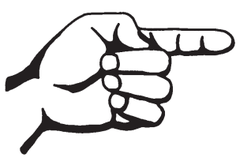

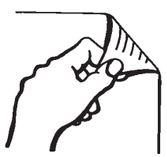

Ground Control Box Terminal Strip Wiring Diagram, S-60

Deutz F3L-2011 Models (after serial number 11879)

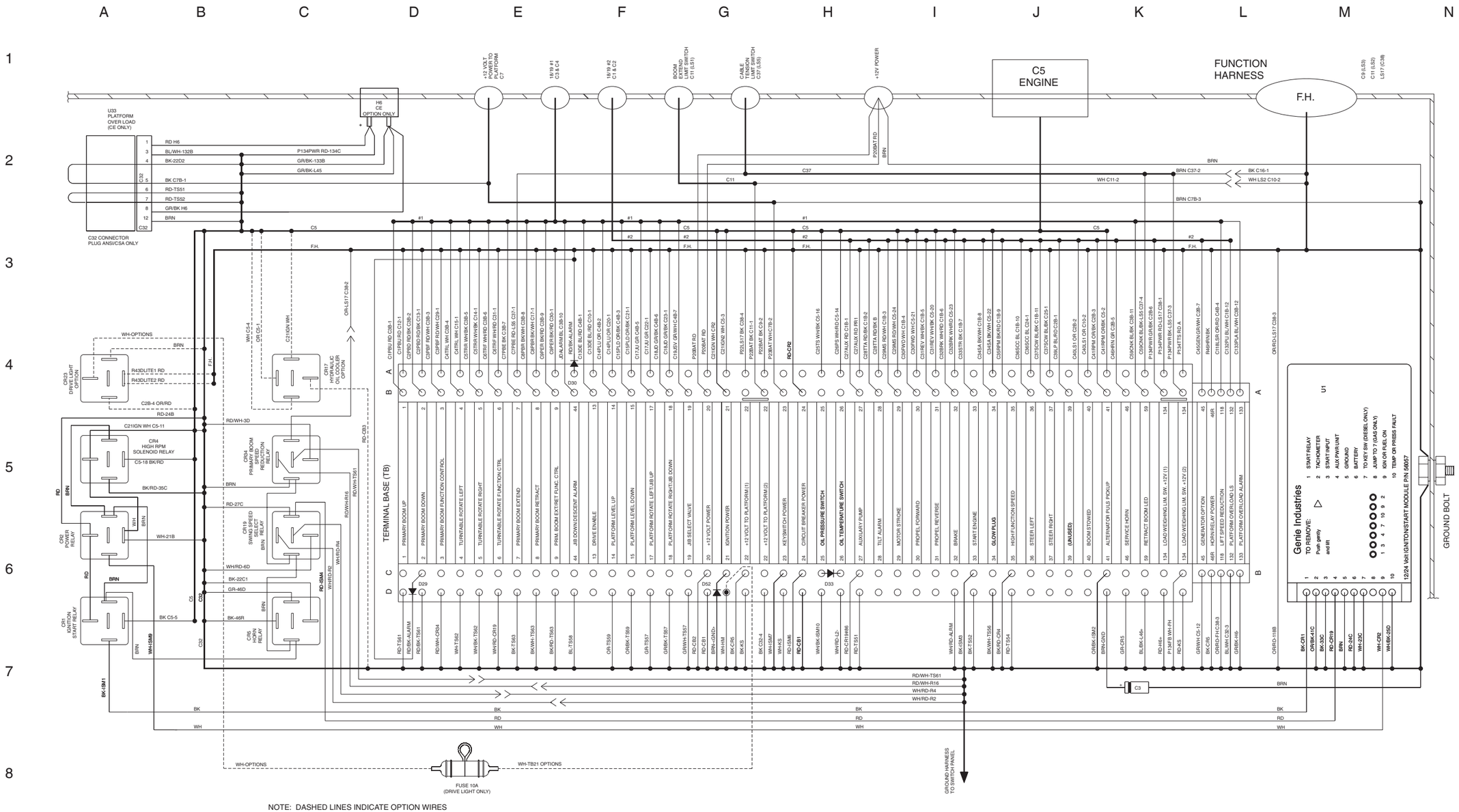

Ground Control Box Switch Panel Wiring Diagram, S-60

Deutz F3L-2011 Models (after serial number 11879)

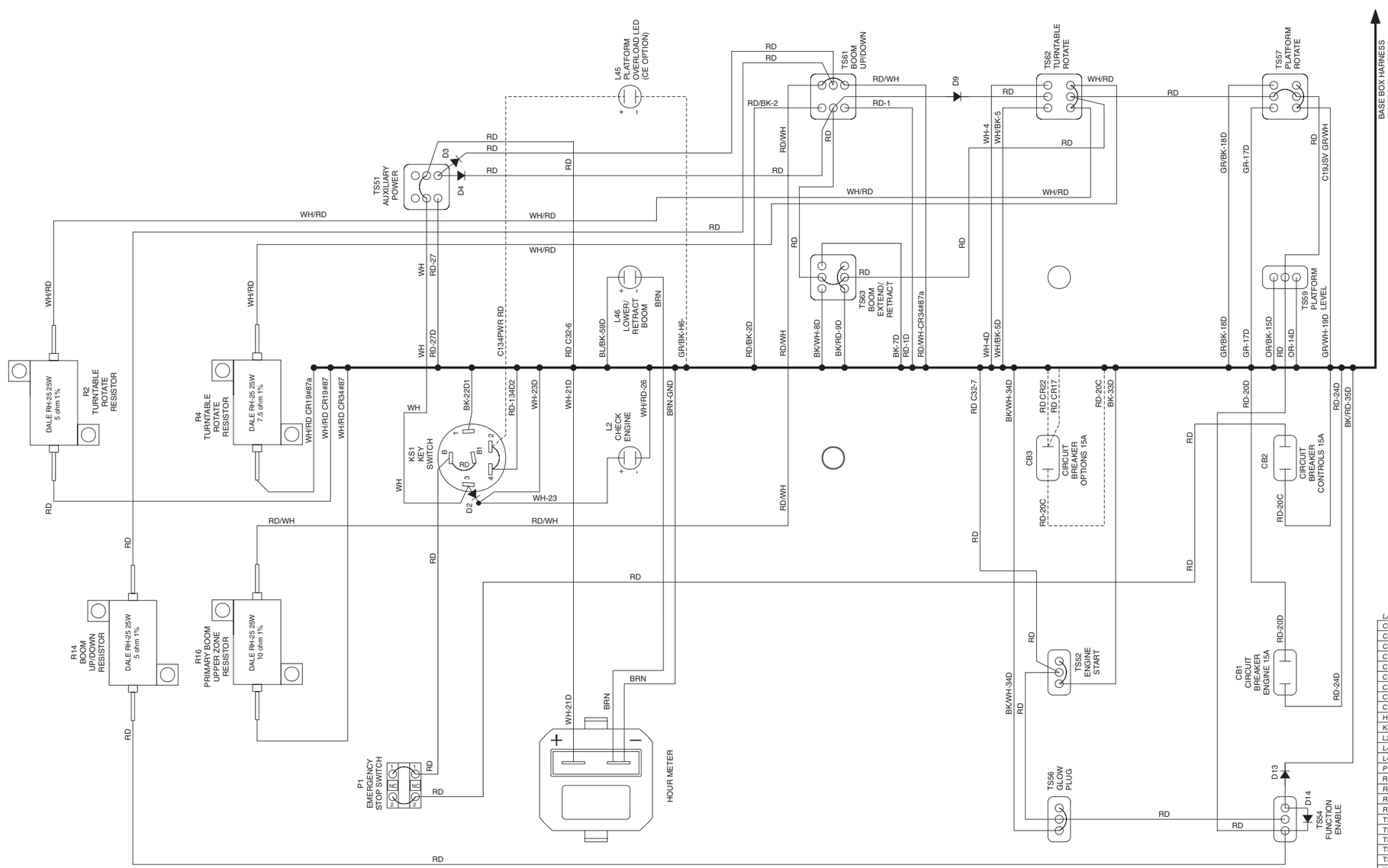

NOTE: DASHED LINES INDICATE OPTION WIRES

LABEL	DESCRIPTION
CB1	CIRCUIT BREAKER, ENGINE, 15A
CB2	CIRCUIT BREAKER, CONTROLS, 15A
CB3	CIRCUIT BREAKER, OPTIONS, 15A
CR1	IGNITION / START RELAY
CR2	IGNITION POWER RELAY
CR4	HIGH IDLE RELAY
CR5	HORN RELAY
CR17	HYDRAULIC OIL COOLER FAN RELAY
CR22	DRIVE LIGHT RELAY (OPTION)
HM	HOUR METER
KS1	KEY SWITCH
L2	CHECK ENGINE LED
L46	LOWER/RETRACT BOOM LED
L45	PLATFORM OVERLOAD LED (CE OPTION)
P1	EMERGENCY STOP BUTTON
R2	SPEED LIMITING RESISTOR 5 OHMS
R4	SPEED LIMITING RESISTOR 7.5 OHMS
R14	SPEED LIMITING RESISTOR 5 OHMS
R16	SPEED LIMITING RESISTOR 10 OHMS
TS51	AUXILIARY POWER TOGGLE SWITCH
TS52	ENGINE START TOGGLE SWITCH
TS54	FUNCTION ENABLE SWITCH
TS56	GLOW PLUG TOGGLE SWITCH
TS57	PLATFORM ROTATE TOGGLE SWITCH
TS59	PLATFORM LEVEL TOGGLE SWITCH
TS61	PRIMARY BOOM UP/DOWN TOGGLE SWITCH
TS62	TURNTABLE ROTATE TOGGLE SWITCH
TS63	BOOM EXTEND/RETRACT TOGGLE SWITCH

Ground Control Box Switch Panel Wiring Diagram, S-60

Deutz F3L-2011 Models (after serial number 11879)

Ground Control Box Terminal Strip Wiring Diagram, S-60, CE Models

Deutz F3L-2011 Models (before serial number 11880)

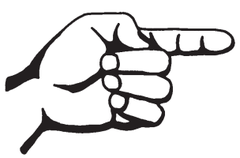

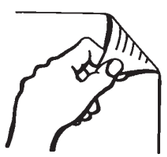

Ground Control Box Terminal Strip Wiring Diagram, S-60, CE Models

Deutz F3L-2011 Models (before serial number 11880)

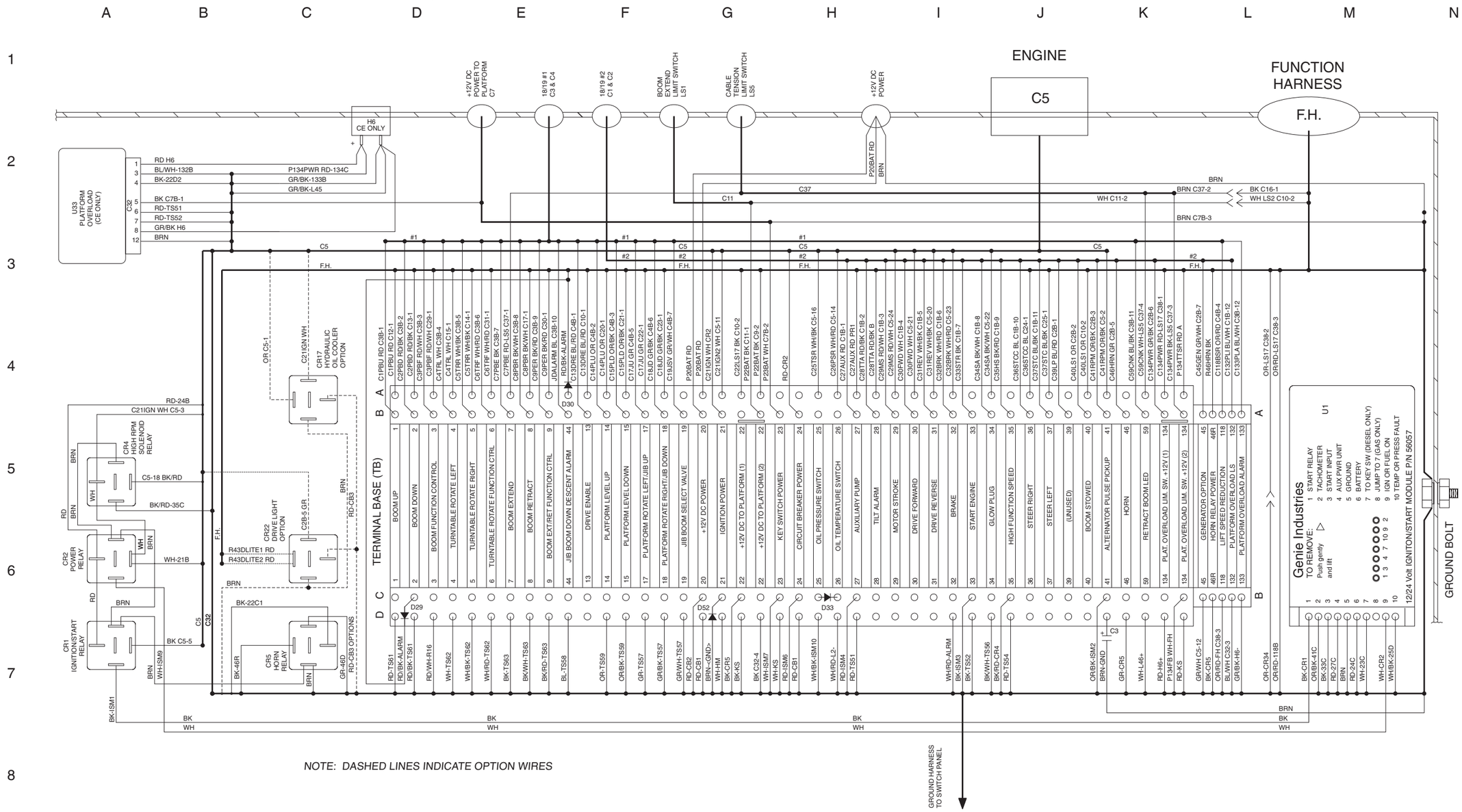

NOTE: DASHED LINES INDICATE OPTION WIRES

Ground Control Box Switch Panel Wiring Diagram, S-60, CE Models

Deutz F3L-2011 Models (before serial number 11880)

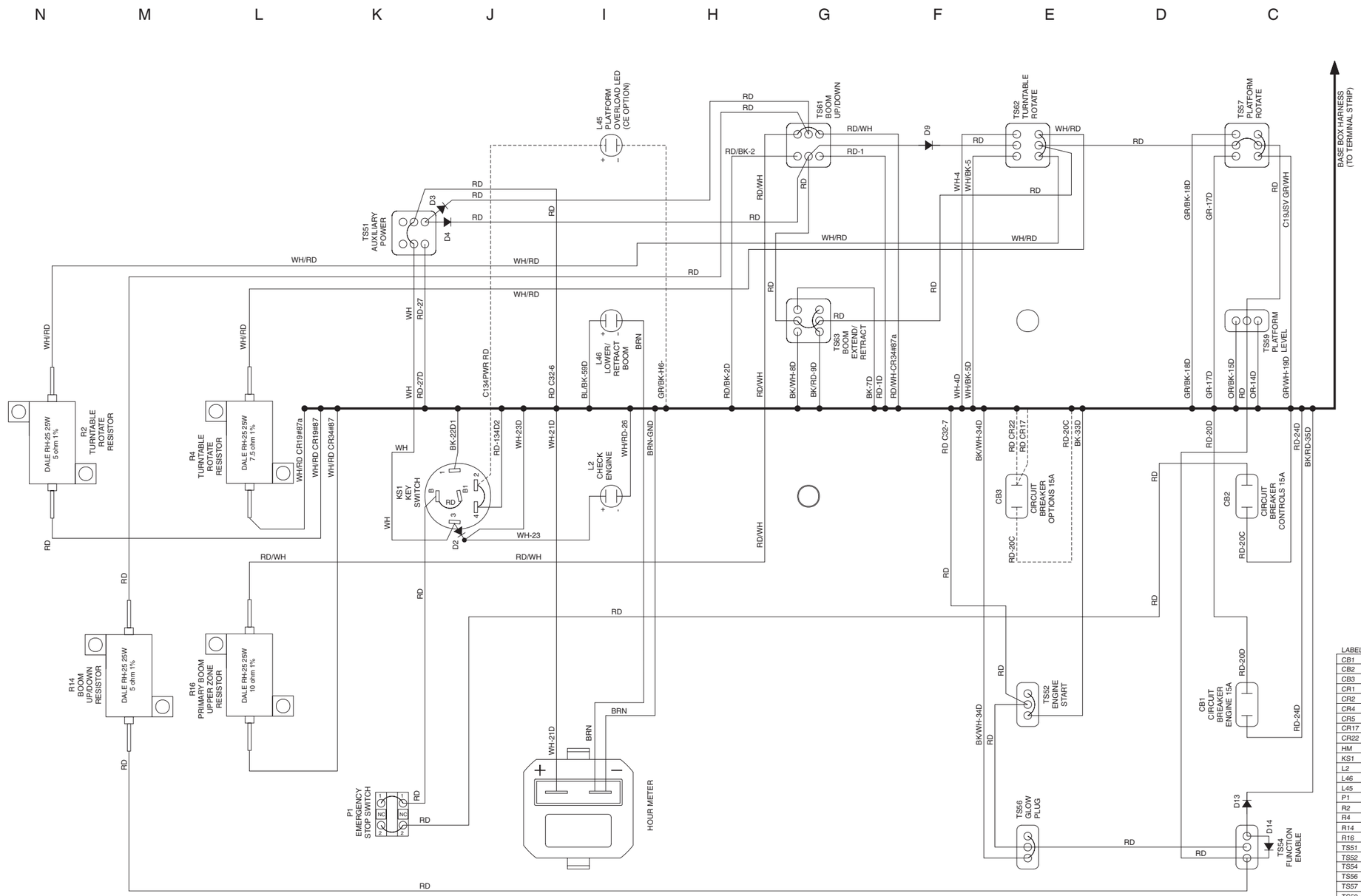

LABEL	DESCRIPTION
CB1	CIRCUIT BREAKER, ENGINE, 15A
CB2	CIRCUIT BREAKER, CONTROLS, 15A
CB3	CIRCUIT BREAKER, OPTIONS, 15A
CR1	IGNITION / START RELAY
CR2	IGNITION POWER RELAY
CR4	HIGH IDLE RELAY
CR5	HORN RELAY
CR17	HYDRAULIC OIL COOLER FAN RELAY
CR22	DRIVE LIGHT RELAY (OPTION)
HM	HOUR METER
KS1	KEY SWITCH
L2	CHECK ENGINE LED
L46	LOWER/RETRACT BOOM LED
L45	PLATFORM OVERLOAD LED (CE OPTION)
P1	EMERGENCY STOP BUTTON
R2	SPEED LIMITING RESISTOR 5 OHMS
R4	SPEED LIMITING RESISTOR 7.5 OHMS
R14	SPEED LIMITING RESISTOR 5 OHMS
R16	SPEED LIMITING RESISTOR 10 OHMS
TS51	AUXILIARY POWER TOGGLE SWITCH
TS52	ENGINE START TOGGLE SWITCH
TS54	FUNCTION ENABLE SWITCH
TS56	GLOW PLUG TOGGLE SWITCH
TS57	PLATFORM ROTATE TOGGLE SWITCH
TS59	PLATFORM LEVEL TOGGLE SWITCH
TS61	PRIMARY BOOM UP/DOWN TOGGLE SWITCH
TS62	TURNTABLE ROTATE TOGGLE SWITCH
TS63	BOOM EXTEND/RETRACT TOGGLE SWITCH

NOTE: DASHED LINES INDICATE OPTION WIRES

Ground Control Box Switch Panel Wiring Diagram, S-60, CE Models

Deutz F3L-2011 Models (before serial number 11880)

Ground Control Box Terminal Strip Wiring Diagram, S-60, CE Models, Deutz F3L-2011 Models (after serial number 11879)

Ground Control Box Terminal Strip Wiring Diagram, S-60, CE Models

Deutz F3L-2011 Models (after serial number 11879)

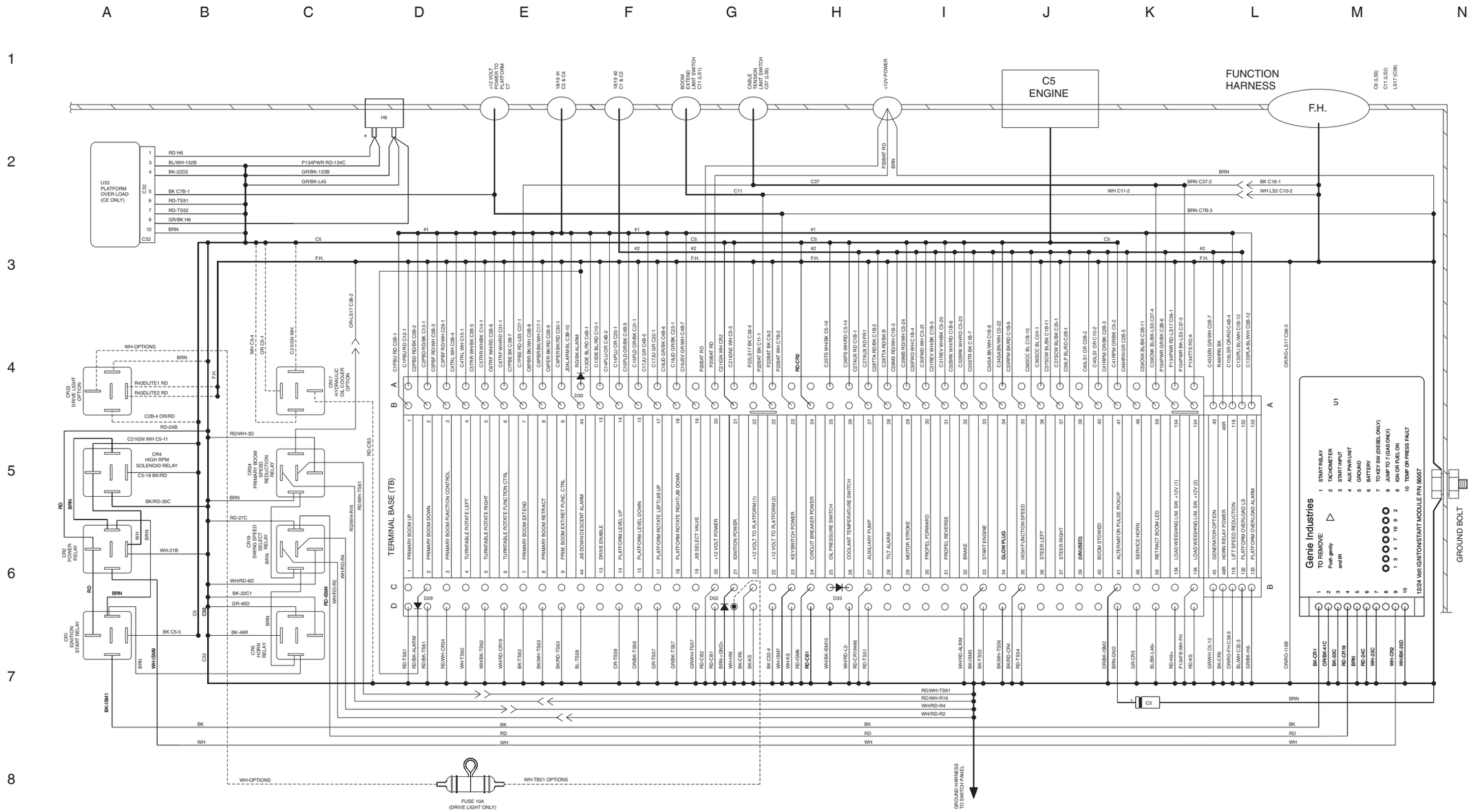

Ground Control Box Switch Panel Wiring Diagram, S-60, CE Models

Deutz F3L-2011 Models (after serial number 11879)

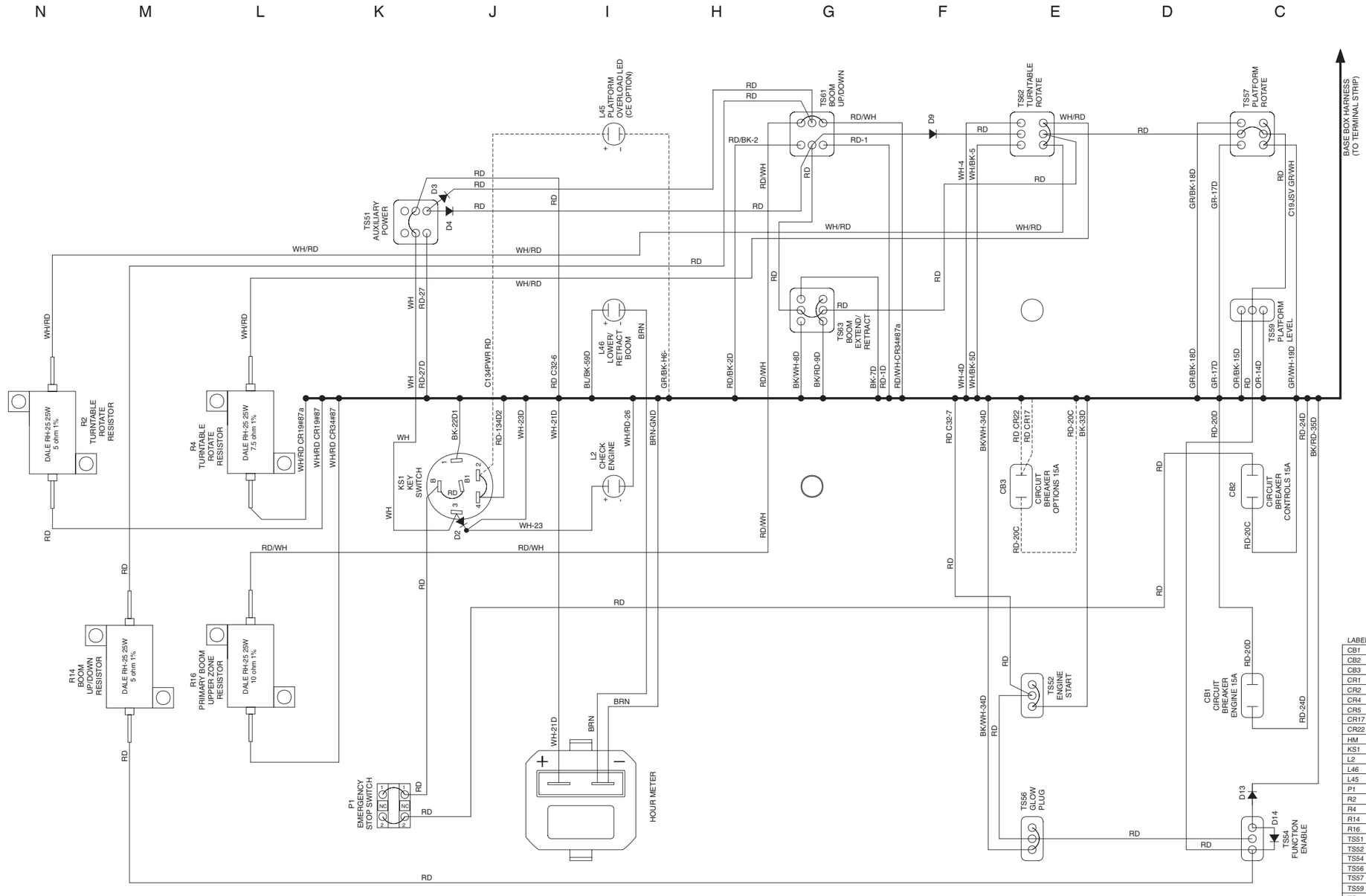

LABEL	DESCRIPTION
CB1	CIRCUIT BREAKER, ENGINE, 15A
CB2	CIRCUIT BREAKER, CONTROLS, 15A
CB3	CIRCUIT BREAKER, OPTIONS, 15A
CR1	IGNITION / START RELAY
CR2	IGNITION POWER RELAY
CR4	HIGH IDLE RELAY
CR5	HORN RELAY
CR17	HYDRAULIC OIL COOLER FAN RELAY
CR22	DRIVE LIGHT RELAY (OPTION)
HM	HOUR METER
KS1	KEY SWITCH
L2	CHECK ENGINE LED
L46	LOWER/RETRACT BOOM LED
L45	PLATFORM OVERLOAD LED (CE OPTION)
P1	EMERGENCY STOP BUTTON
R2	SPEED LIMITING RESISTOR 5 OHMS
R4	SPEED LIMITING RESISTOR 7.5 OHMS
R14	SPEED LIMITING RESISTOR 5 OHMS
R16	SPEED LIMITING RESISTOR 10 OHMS
TS51	AUXILIARY POWER TOGGLE SWITCH
TS52	ENGINE START TOGGLE SWITCH
TS54	FUNCTION ENABLE SWITCH
TS56	GLOW PLUG TOGGLE SWITCH
TS57	PLATFORM ROTATE TOGGLE SWITCH
TS59	PLATFORM LEVEL TOGGLE SWITCH
TS61	PRIMARY BOOM UP/DOWN TOGGLE SWITCH
TS62	TURNTABLE ROTATE TOGGLE SWITCH
TS63	BOOM EXTEND/RETRACT TOGGLE SWITCH

NOTE: DASHED LINES INDICATE OPTION WIRES

Ground Control Box Switch Panel Wiring Diagram, S-60, CE Models

Deutz F3L-2011 Models (after serial number 11879)

Platform Control Box Wiring Diagram, S-60

Deutz F3L-2011 Models

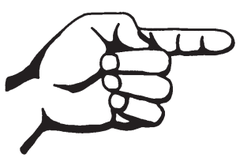

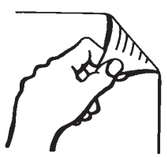

Platform Control Box Wiring Diagram, S-60

Deutz F3L-2011 Models

ITEM	DESCRIPTION
H1	TILT ALARM
C7P	12V DC PLATFORM POWER CONNECTOR
C9	FOOT SWITCH CONNECTOR
C1P-C4P	48 PIN CONNECTOR BLOCK
U13	ALC-500 CONTROL BOARD
J1	CONTROL BOARD INPUT CONNECTOR
J2	CONTROL BOARD OUTPUT CONNECTOR
J3	CONTROL BOARD POWER CONNECTOR
CR27	CONTROL RELAY (CE OPTION)
CR30	CONTROL RELAY (CE OPTION)
LS18	LOAD SENSE LIMIT SWITCH

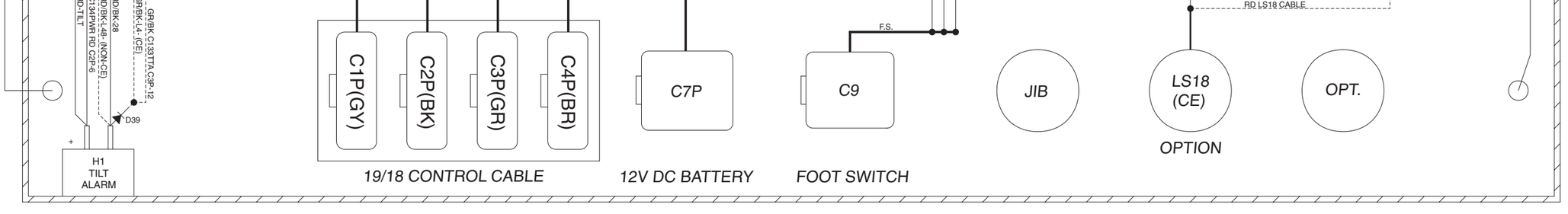

Platform Control Box Switch Panel Wiring Diagram, S-60

Deutz F3L-2011 Models

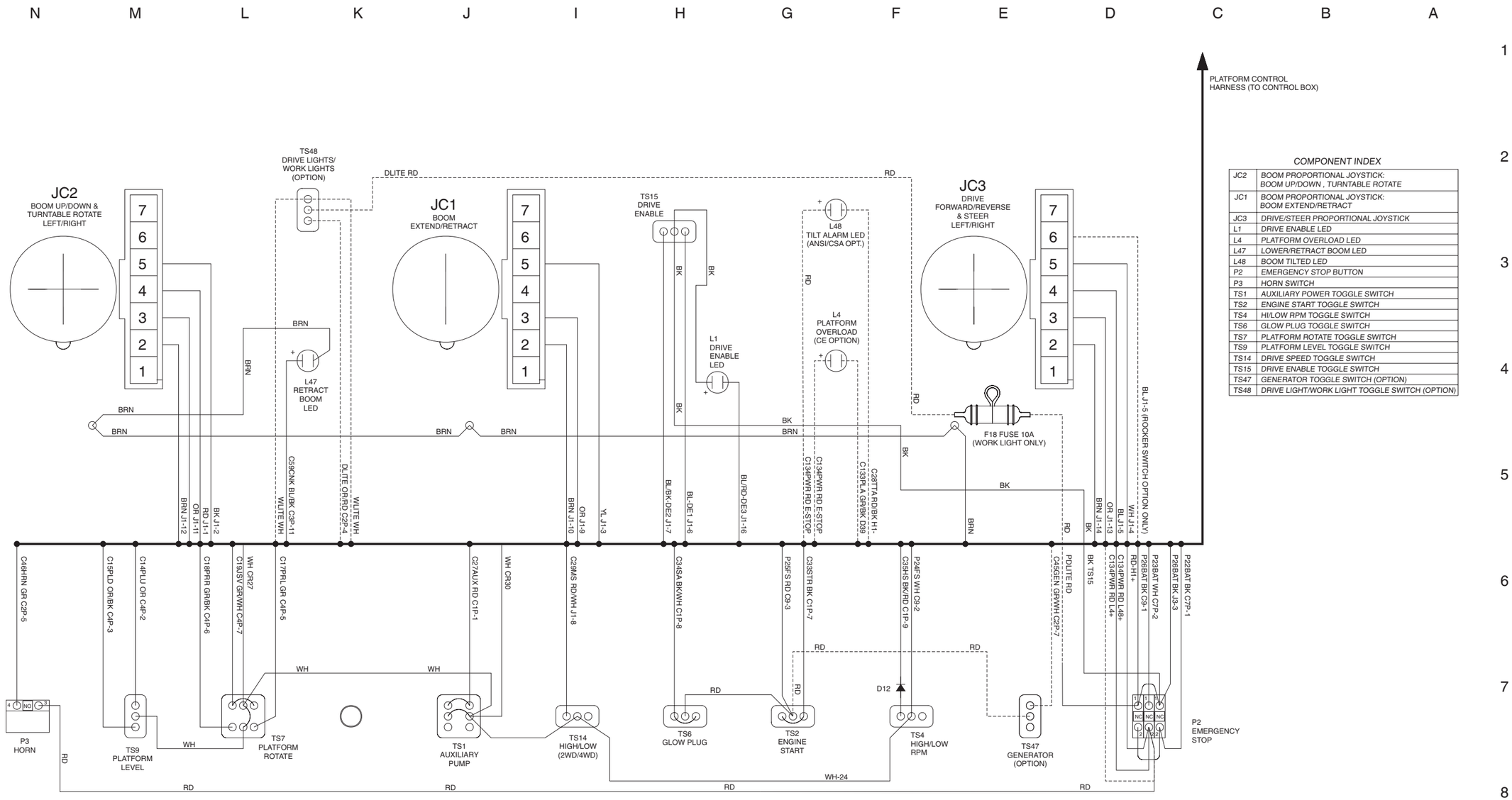

COMPONENT INDEX

JC2	*BOOM PROPORTIONAL JOYSTICK: BOOM UP/DOWN , TURNTABLE ROTATE*
JC1	*BOOM PROPORTIONAL JOYSTICK: BOOM EXTEND/RETRACT*
JC3	*DRIVE/STEER PROPORTIONAL JOYSTICK*
L1	*DRIVE ENABLE LED*
L4	*PLATFORM OVERLOAD LED*
L47	*LOWER/RETRACT BOOM LED*
L48	*BOOM TILTED LED*
P2	*EMERGENCY STOP BUTTON*
P3	*HORN SWITCH*
TS1	*AUXILIARY POWER TOGGLE SWITCH*
TS2	*ENGINE START TOGGLE SWITCH*
TS4	*HI/LOW RPM TOGGLE SWITCH*
TS6	*GLOW PLUG TOGGLE SWITCH*
TS7	*PLATFORM ROTATE TOGGLE SWITCH*
TS9	*PLATFORM LEVEL TOGGLE SWITCH*
TS14	*DRIVE SPEED TOGGLE SWITCH*
TS15	*DRIVE ENABLE TOGGLE SWITCH*
TS47	*GENERATOR TOGGLE SWITCH (OPTION)*
TS48	*DRIVE LIGHT/WORK LIGHT TOGGLE SWITCH (OPTION)*

NOTE: DASHED LINES INDICATE OPTION WIRES

Platform Control Box Switch Panel Wiring Diagram, S-60

Deutz F3L-2011 Models

Electrical Schematic, S-65

Deutz F3L-2011 Models (before serial number 11880)

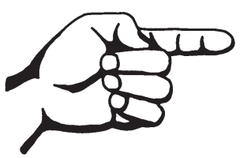

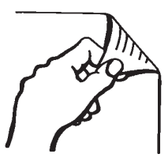

Electrical Schematic, S-65

Deutz F3L-2011 Models (before serial number 11880)

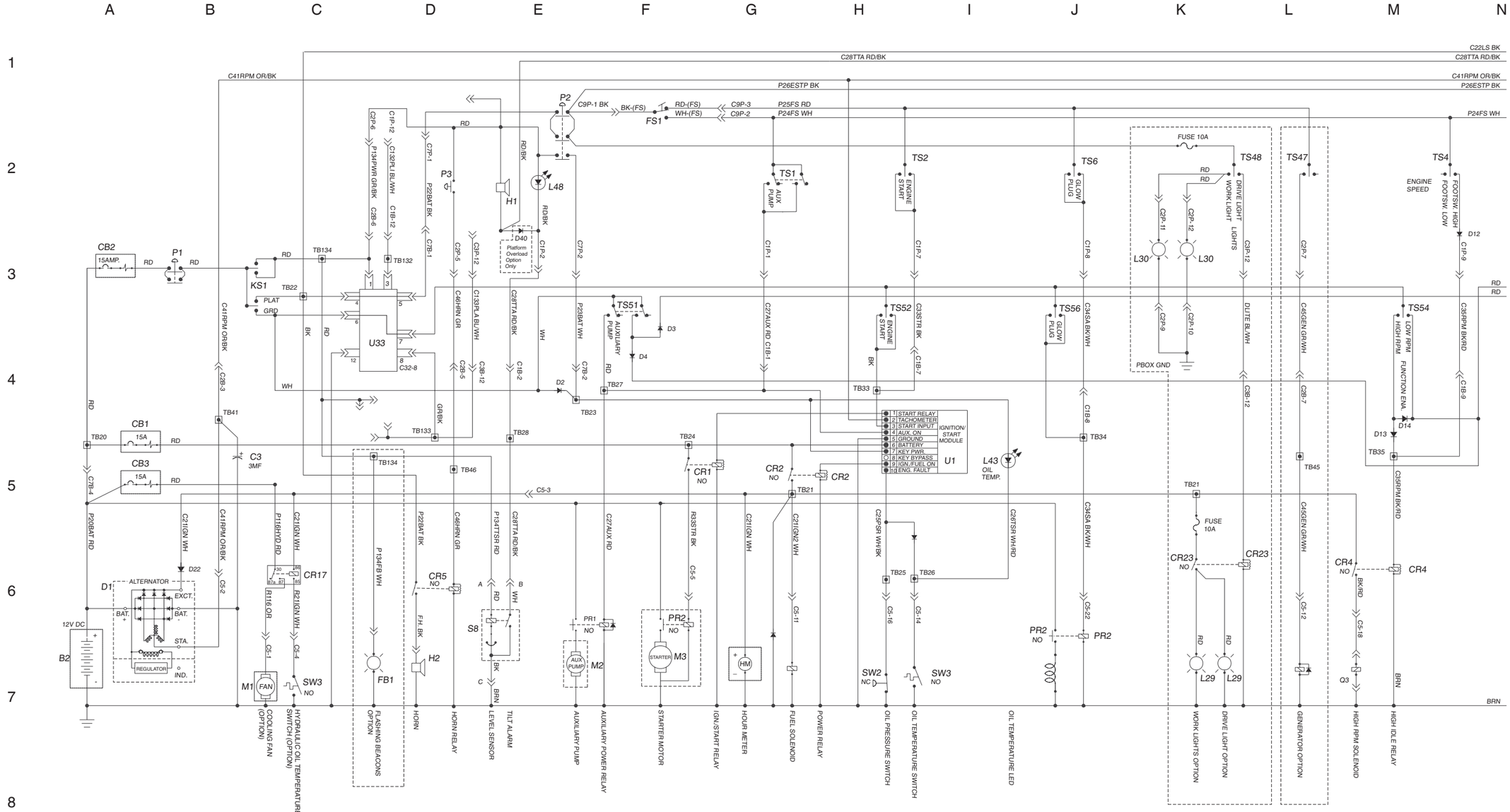

NOTES:
CE AND PLATFORM OVERLOAD OPTION ONLY.

Electrical Schematic, S-65

Deutz F3L-2011 Models (before serial number 11880)

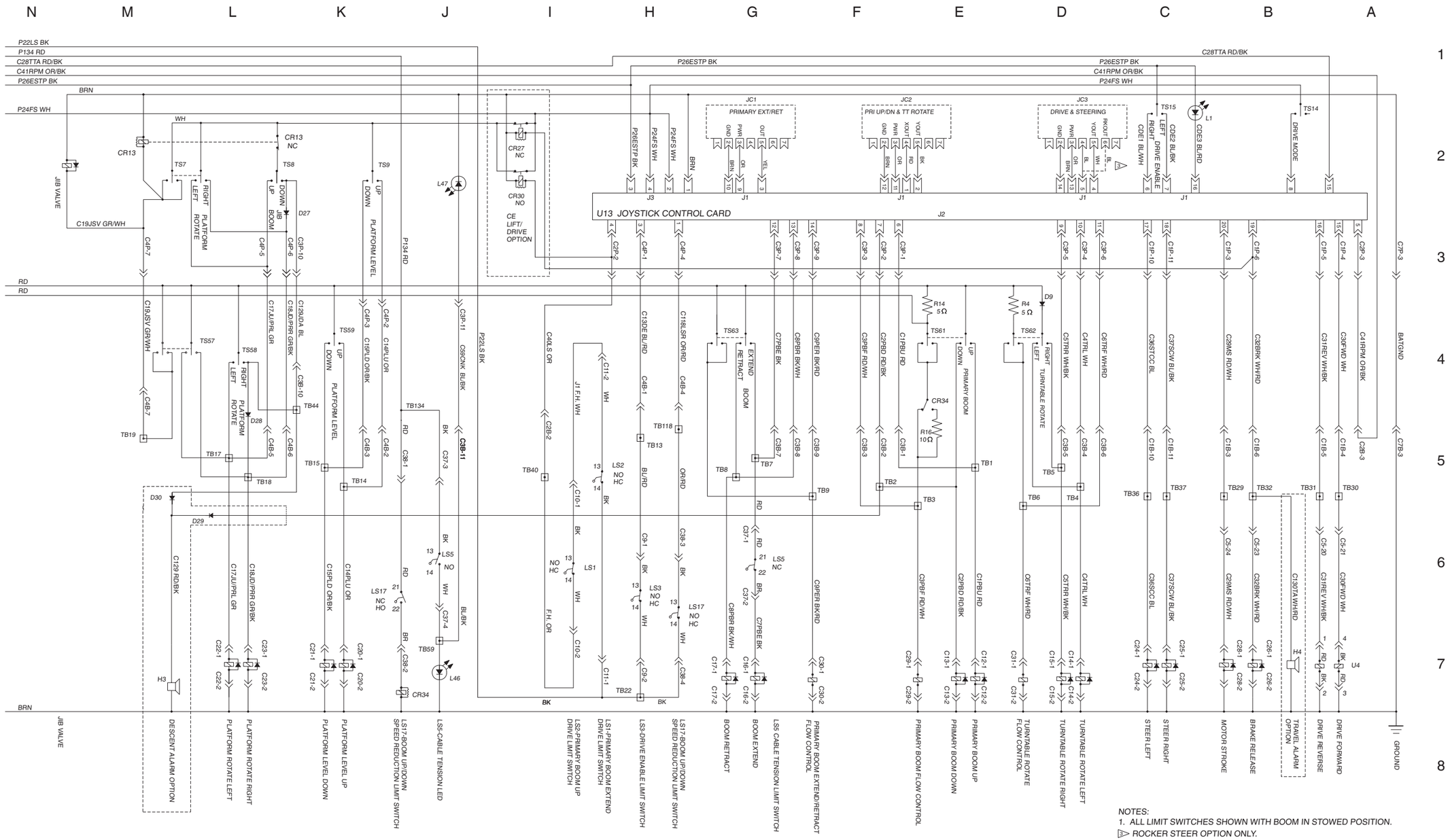

Electrical Schematic, S-65

Deutz F3L-2011 Models (before serial number 11880)

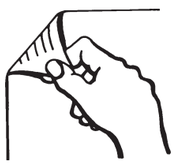

Electrical Schematic, S-65

Deutz F3L-2011 Models (after serial number 11879)

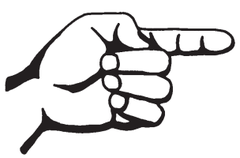

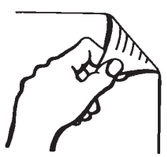

Electrical Schematic, S-65

Deutz F3L-2011 Models (after serial number 11879)

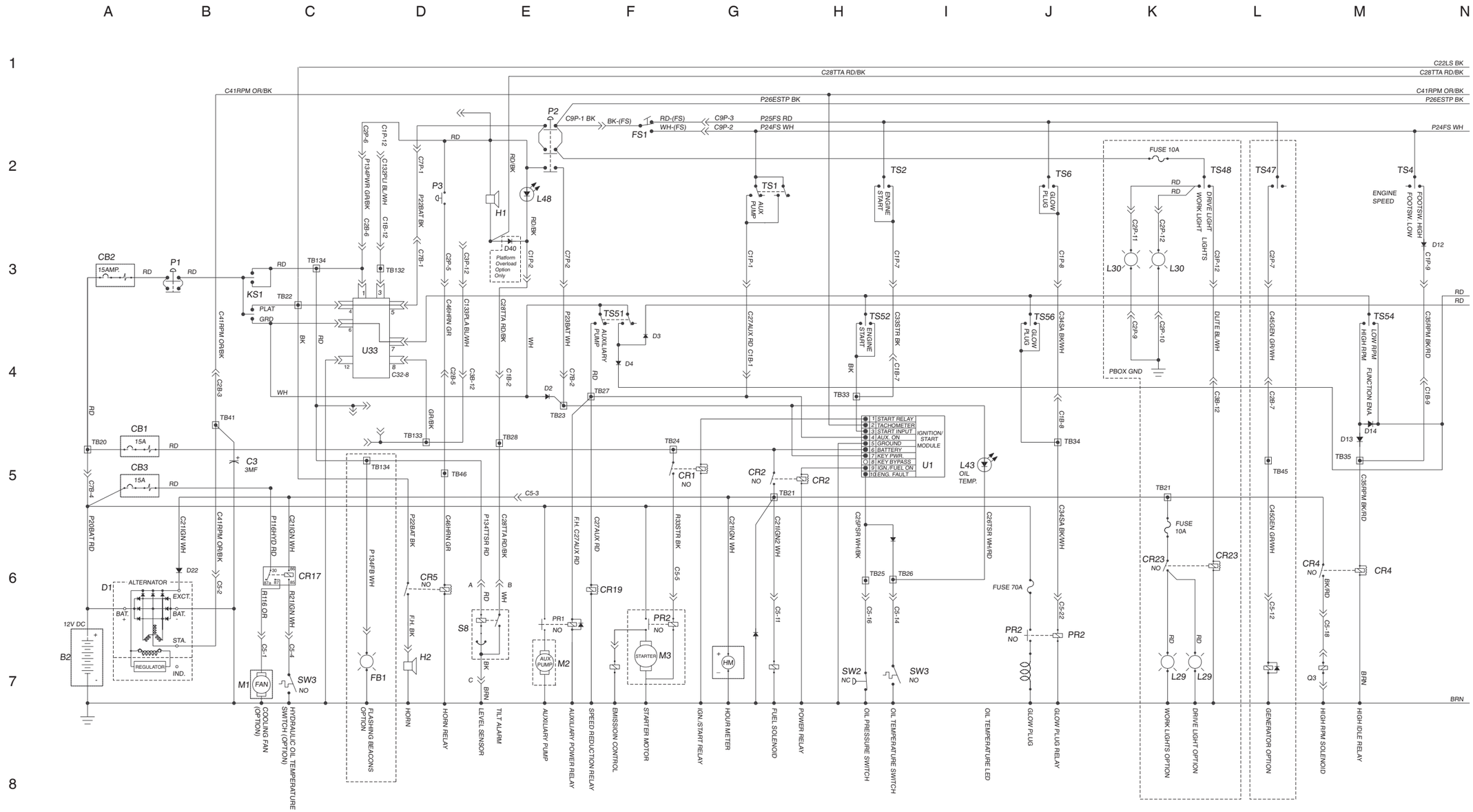

NOTES:
1 CE AND PLATFORM OVERLOAD OPTION ONLY.

Electrical Schematic, S-65

Deutz F3L-2011 Models (after serial number 11879)

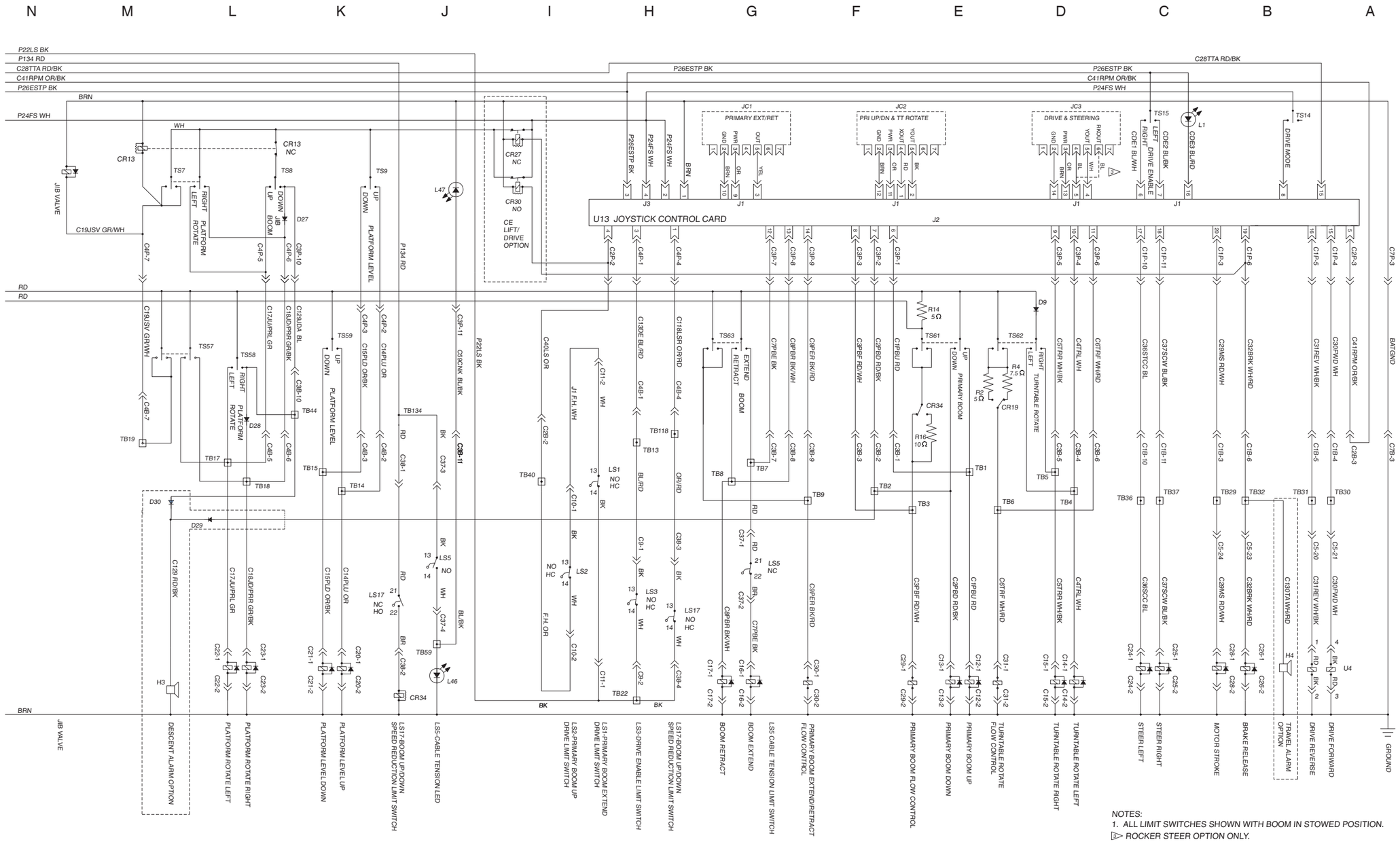

Electrical Schematic, S-65

Deutz F3L-2011 Models (after serial number 11879)

Electrical Schematic, S-65, CE Models

Deutz F3L-2011 Models (before serial number 11880)

Electrical Schematic, S-65, CE Models

Deutz F3L-2011 Models (before serial number 11880)

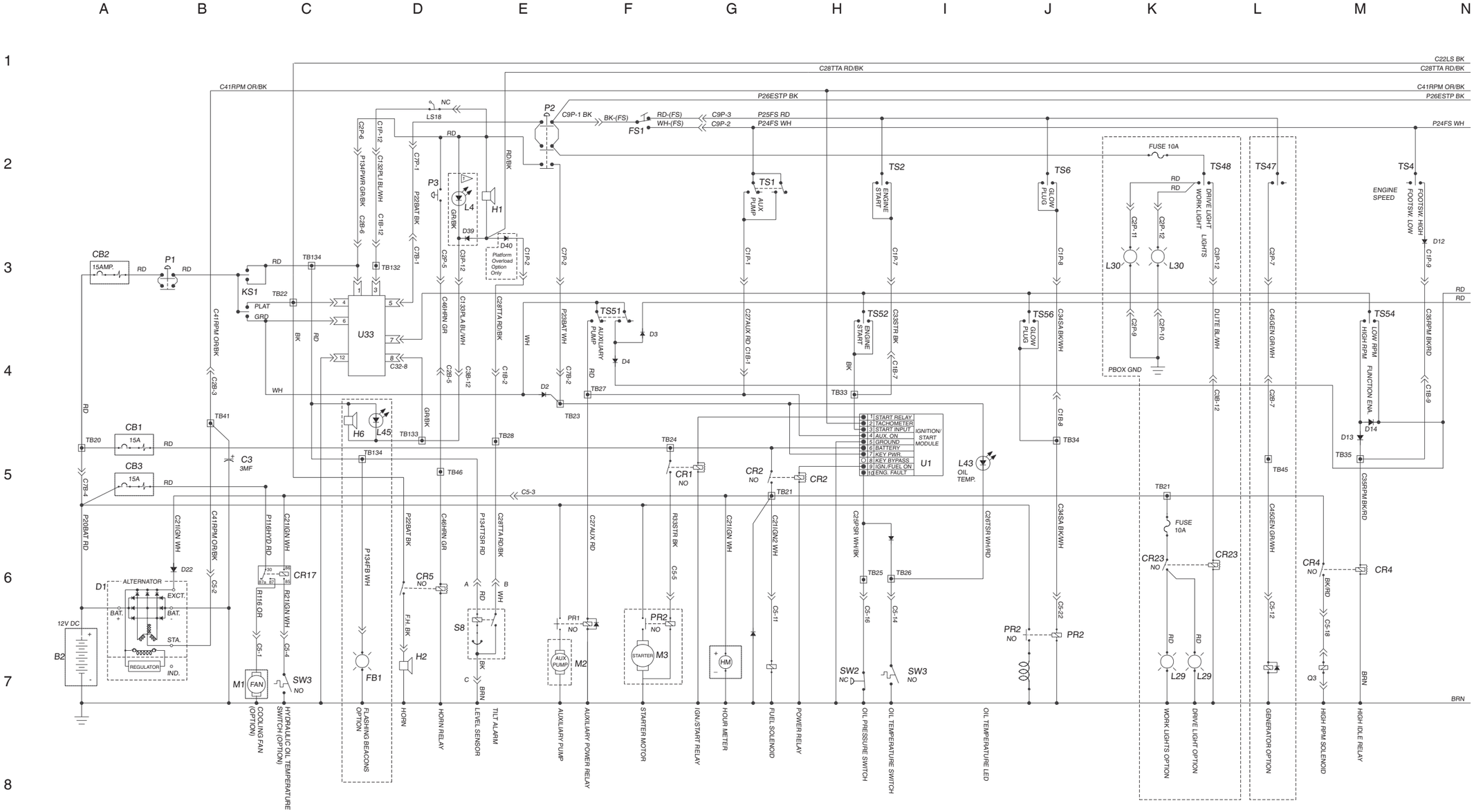

NOTES:
▷ CE AND PLATFORM OVERLOAD OPTION ONLY.

Electrical Schematic, S-65, CE Models

Deutz F3L-2011 Models (before serial number 11880)

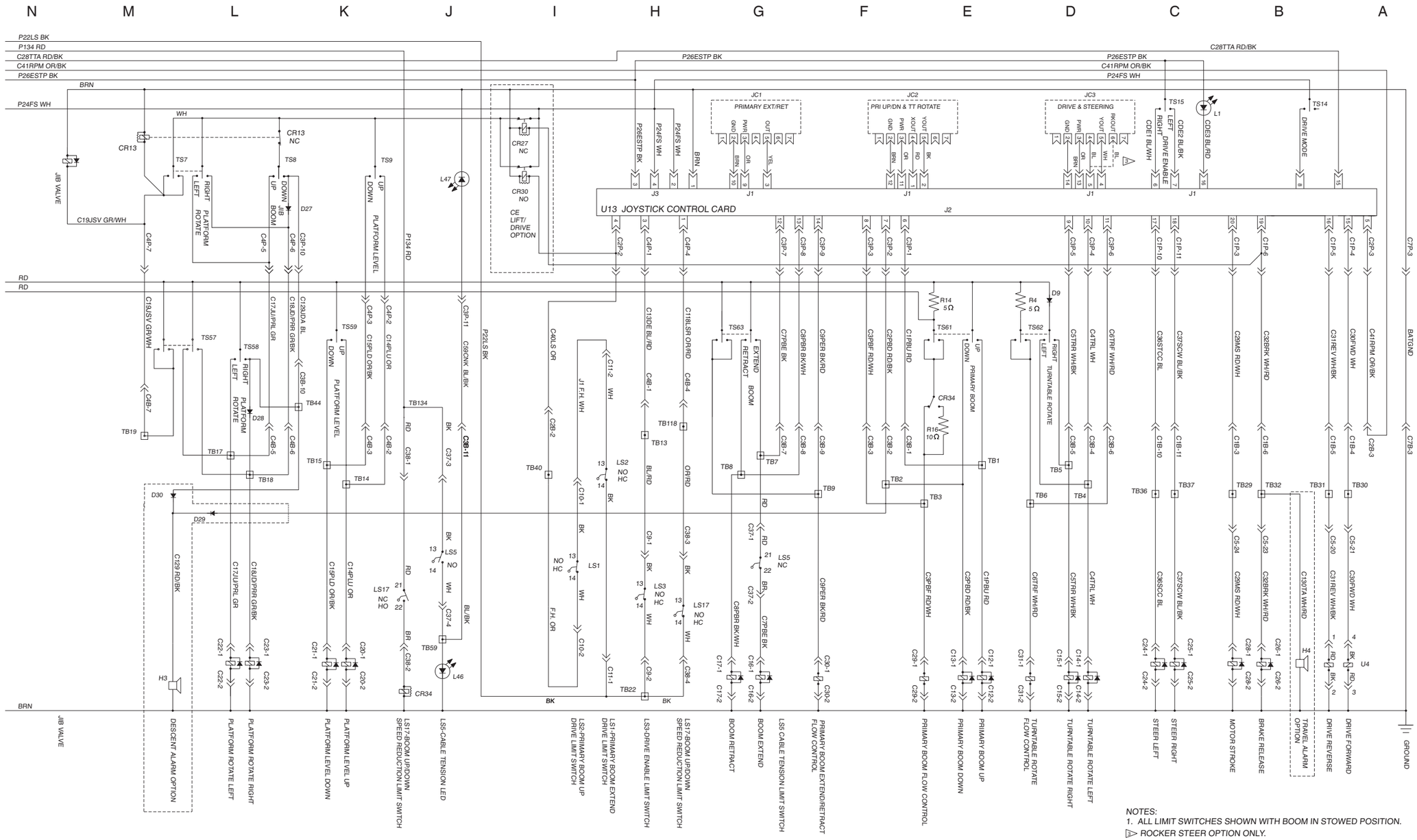

NOTES:
1. ALL LIMIT SWITCHES SHOWN WITH BOOM IN STOWED POSITION.
▷ ROCKER STEER OPTION ONLY.

Electrical Schematic, S-65, CE Models

Deutz F3L-2011 Models (before serial number 11880)

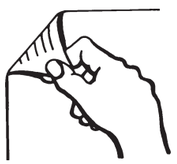

Electrical Schematic, S-65, CE Models

Deutz F3L-2011 Models (after serial number 11879)

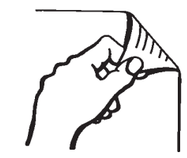

Electrical Schematic, S-65, CE Models

Deutz F3L-2011 Models (after serial number 11879)

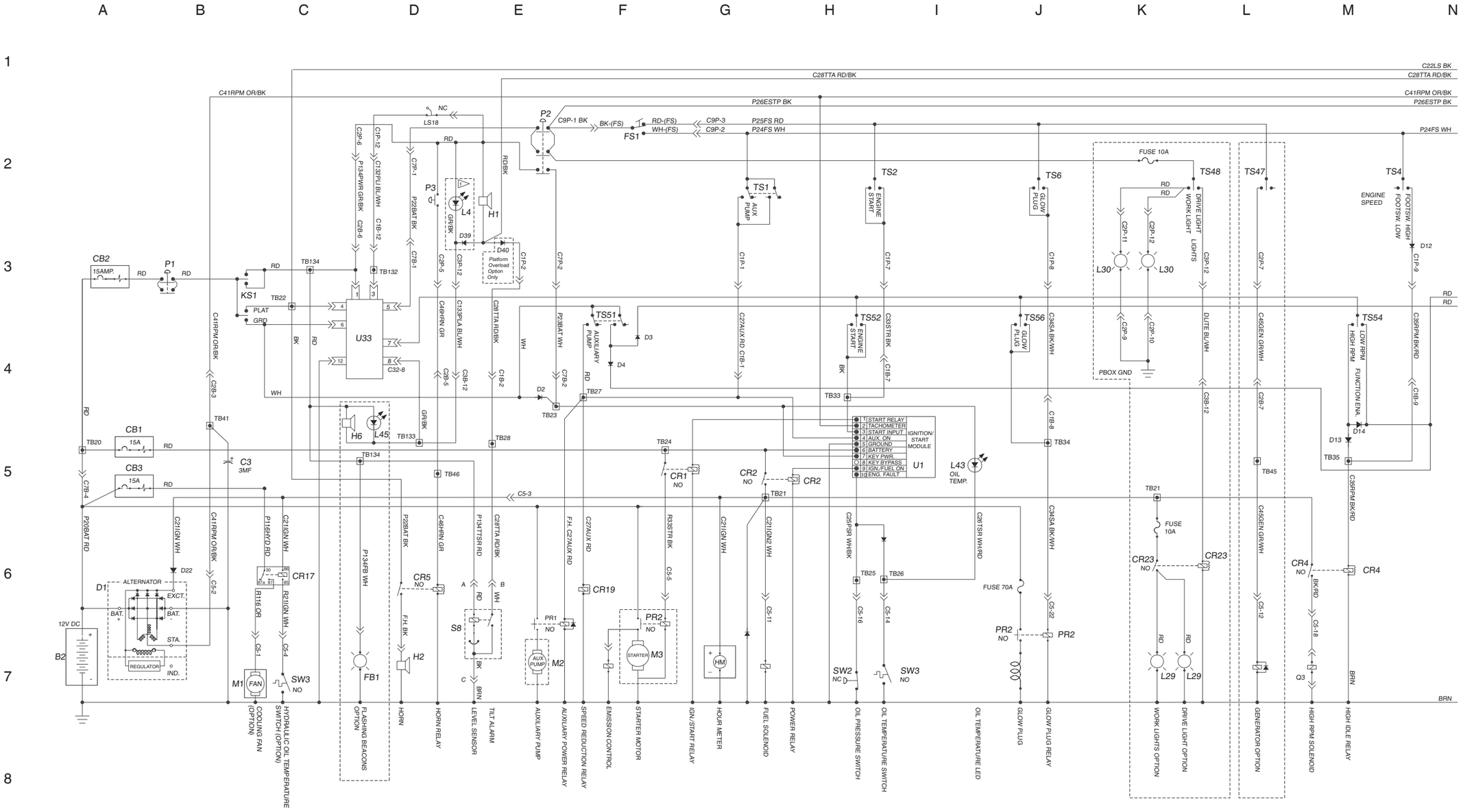

NOTES:
▷ CE AND PLATFORM OVERLOAD OPTION ONLY.

Electrical Schematic, S-65, CE Models

Deutz F3L-2011 Models (after serial number 11879)

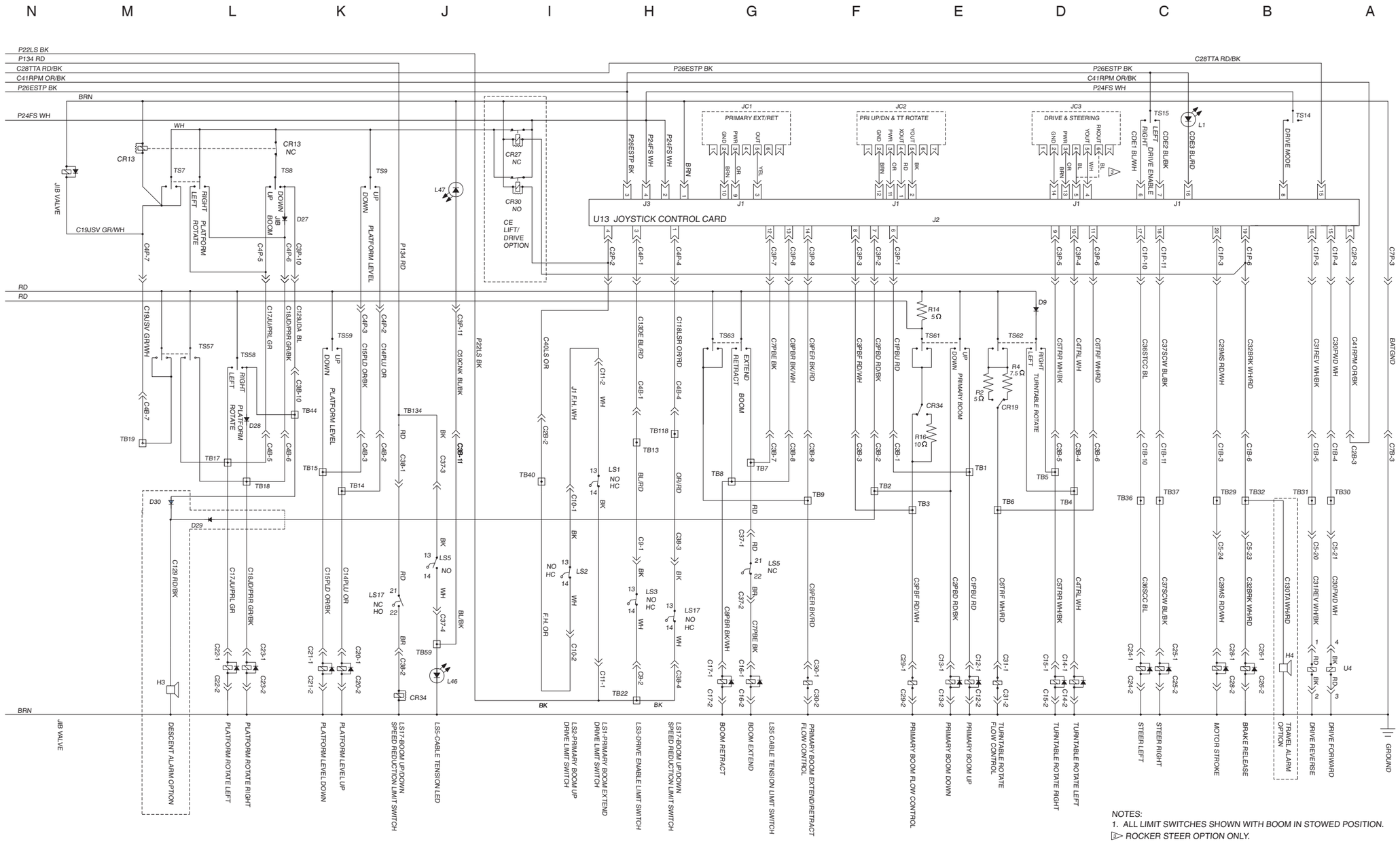

Electrical Schematic, S-65, CE Models

Deutz F3L-2011 Models (after serial number 11879)

Ground Control Box Terminal Strip Wiring Diagram, S-65

Deutz F3L-2011 Models (before serial number 11880)

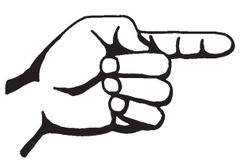

Ground Control Box Terminal Strip Wiring Diagram, S-65

Deutz F3L-2011 Models (before serial number 11880)

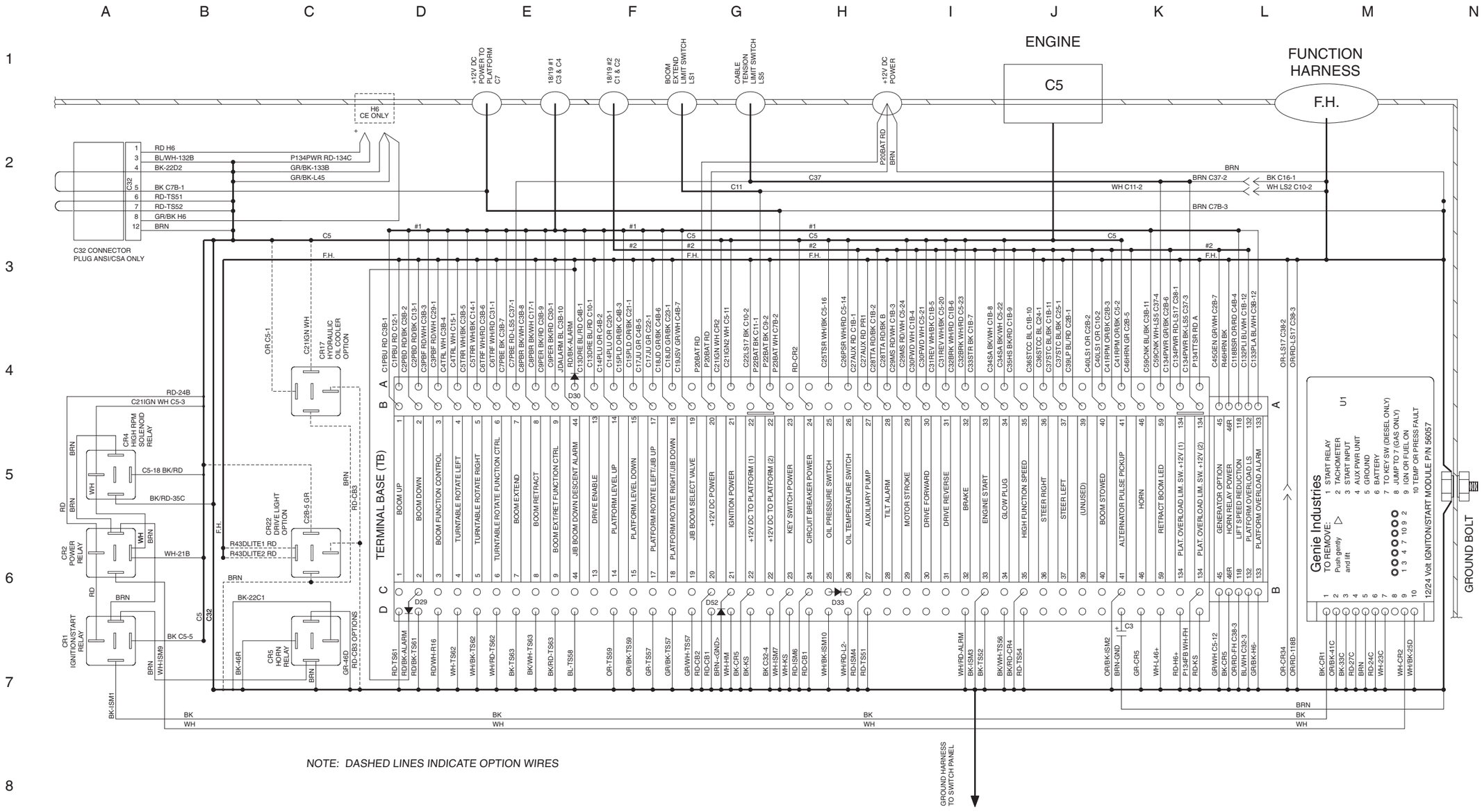

NOTE: DASHED LINES INDICATE OPTION WIRES

Ground Control Box Switch Panel Wiring Diagram, S-65

Deutz F3L-2011 Models (before serial number 11880)

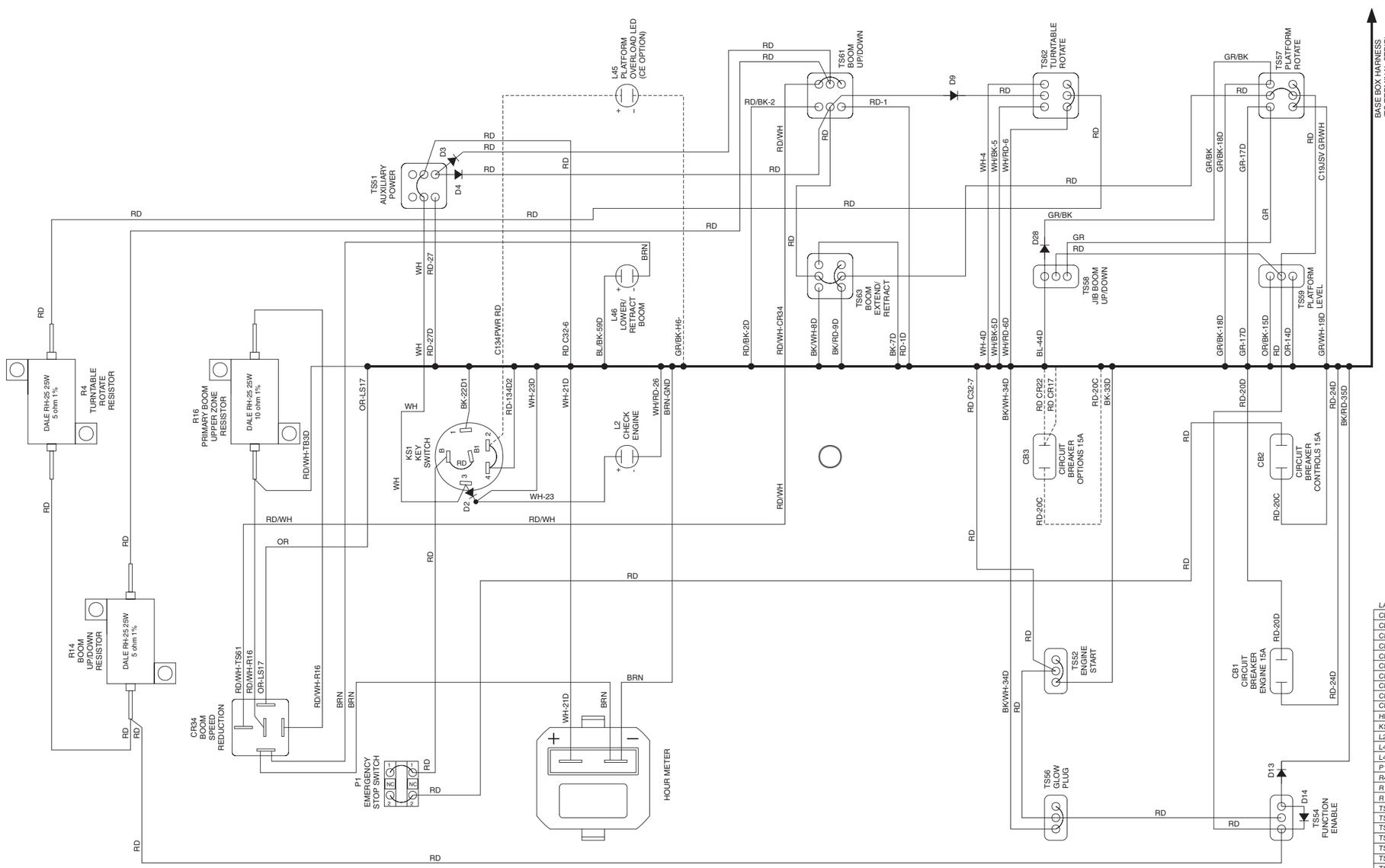

NOTE: DASHED LINES INDICATE OPTION WIRES

LABEL	DESCRIPTION
CB1	CIRCUIT BREAKER, ENGINE, 15A
CB2	CIRCUIT BREAKER, CONTROLS, 15A
CB3	CIRCUIT BREAKER, OPTIONS, 15A
CR1	IGNITION / START RELAY
CR2	IGNITION POWER RELAY
CR4	HIGH IDLE RELAY
CR5	HORN RELAY
CR17	HYDRAULIC OIL COOLER FAN RELAY
CR22	DRIVE LIGHT RELAY (OPTION)
CR34	BOOM SPEED REDUCTION RELAY
HM	HOUR METER
KS1	KEY SWITCH
L2	CHECK ENGINE LED
L46	LOWER/RETRACT BOOM LED
L45	PLATFORM OVERLOAD LED (CE OPTION)
P1	EMERGENCY STOP BUTTON
R4	SPEED LIMITING RESISTOR 5 OHMS
R14	SPEED LIMITING RESISTOR 5 OHMS
R16	SPEED LIMITING RESISTOR 10 OHMS
TS51	AUXILIARY POWER TOGGLE SWITCH
TS52	ENGINE START TOGGLE SWITCH
TS54	FUNCTION ENABLE SWITCH
TS56	GLOW PLUG TOGGLE SWITCH
TS57	PLATFORM ROTATE TOGGLE SWITCH
TS58	JIB BOOM UP/DOWN TOGGLE SWITCH
TS59	PLATFORM LEVEL TOGGLE SWITCH
TS61	PRIMARY BOOM UP/DOWN TOGGLE SWITCH
TS62	TURNTABLE ROTATE TOGGLE SWITCH
TS63	BOOM EXTEND/RETRACT TOGGLE SWITCH

Ground Control Box Switch Panel Wiring Diagram, S-65

Deutz F3L-2011 Models (before serial number 11880)

Ground Control Box Terminal Strip Wiring Diagram, S-65

Deutz F3L-2011 Models (after serial number 11879)

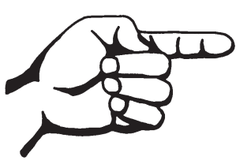

Ground Control Box Terminal Strip Wiring Diagram, S-65

Deutz F3L-2011 Models (after serial number 11879)

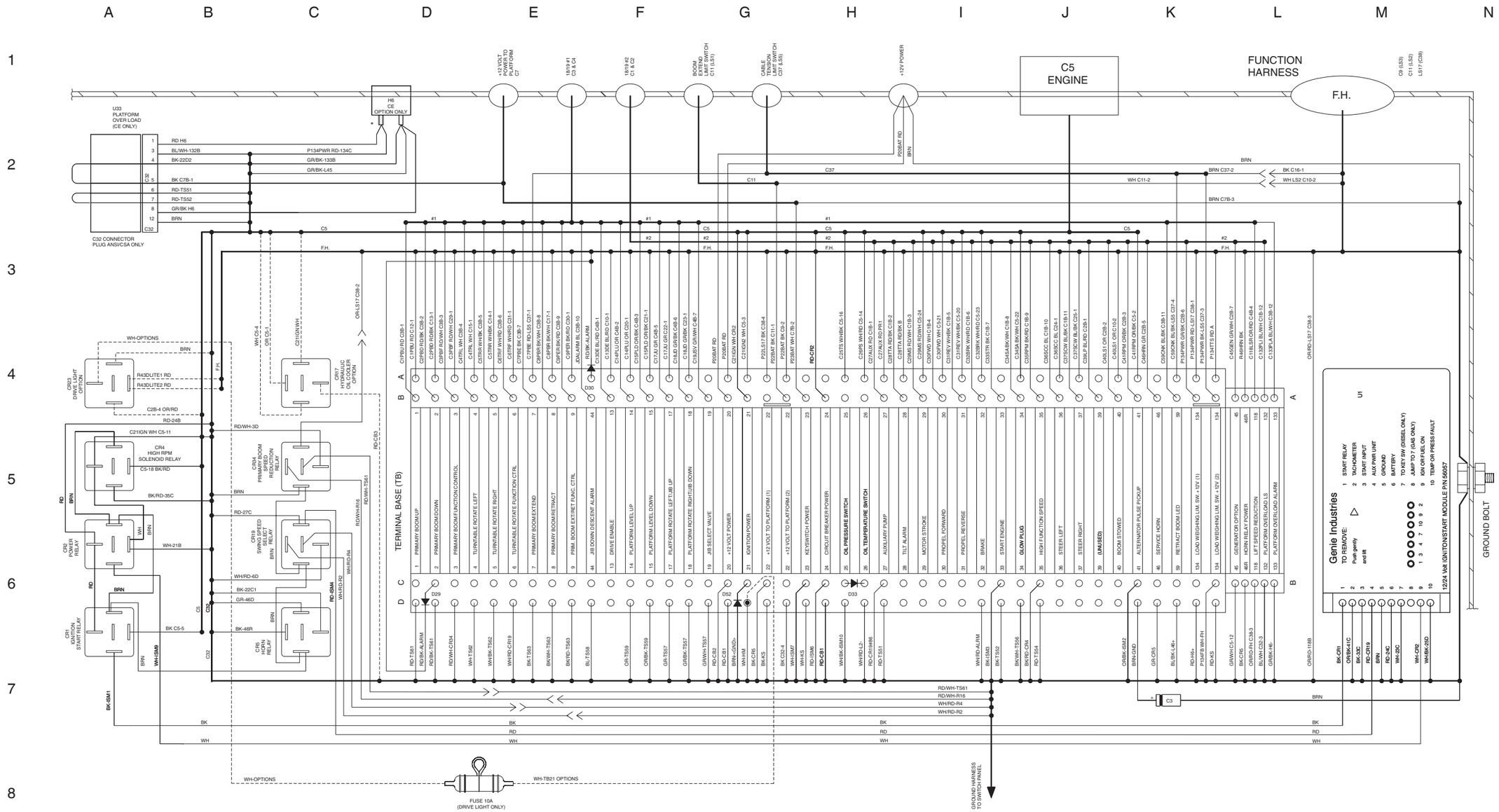

NOTE: DASHED LINES INDICATE OPTION WIRES

Ground Control Box Switch Panel Wiring Diagram, S-65

Deutz F3L-2011 Models (after serial number 11879)

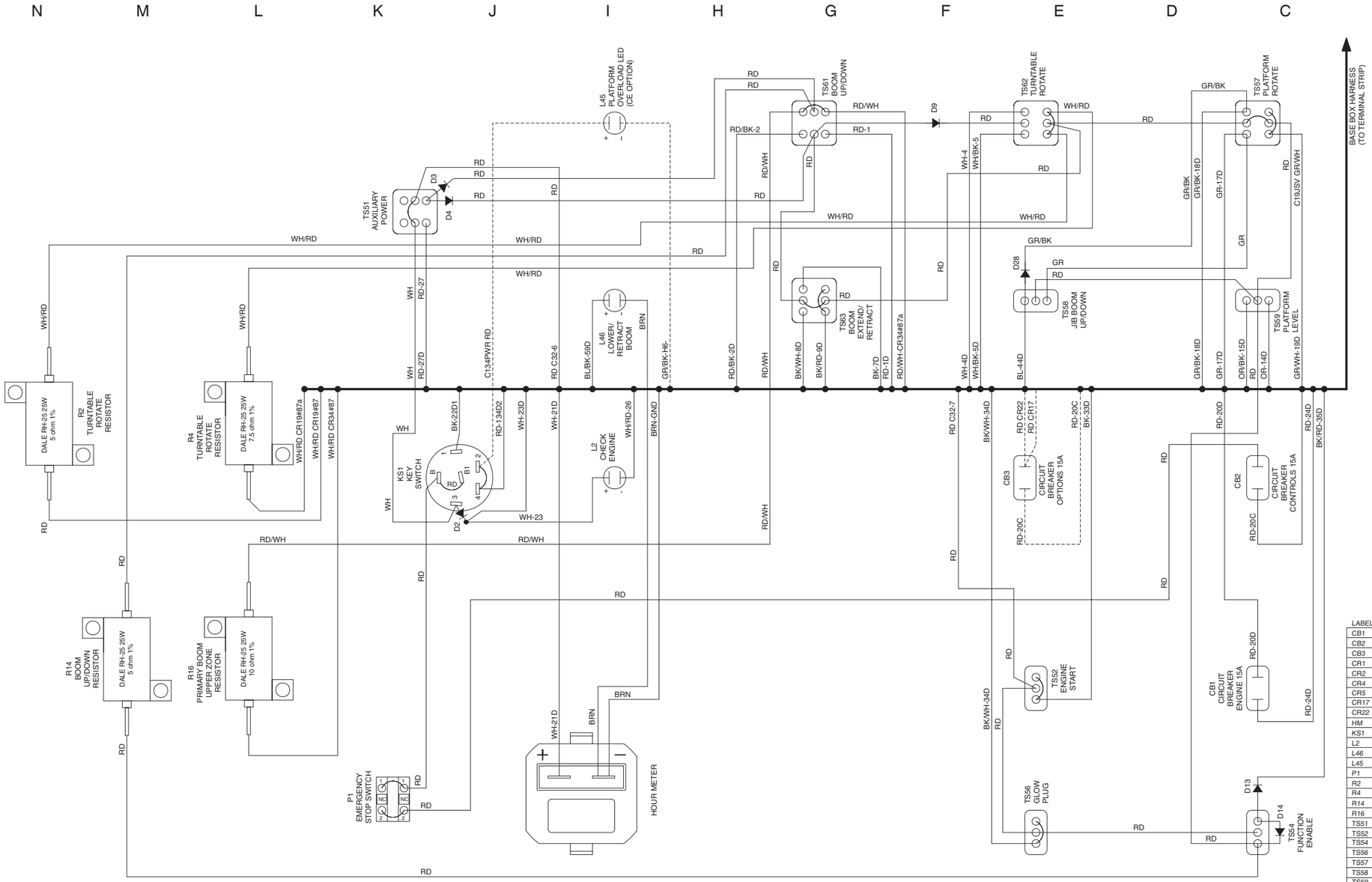

LABEL	DESCRIPTION
CB1	CIRCUIT BREAKER, ENGINE, 15A
CB2	CIRCUIT BREAKER, CONTROLS, 15A
CB3	CIRCUIT BREAKER, OPTIONS, 15A
CR1	IGNITION / START RELAY
CR2	IGNITION POWER RELAY
CR4	HIGH IDLE RELAY
CR5	HORN RELAY
CR17	HYDRAULIC OIL COOLER FAN RELAY
CR22	DRIVE LIGHT RELAY (OPTION)
HM	HOUR METER
KS1	KEY SWITCH
L2	CHECK ENGINE LED
L46	LOWER/RETRACT BOOM LED
L45	PLATFORM OVERLOAD LED (CE OPTION)
P1	EMERGENCY STOP BUTTON
R2	SPEED LIMITING RESISTOR 5 OHMS
R4	SPEED LIMITING RESISTOR 7.5 OHMS
R14	SPEED LIMITING RESISTOR 5 OHMS
R16	SPEED LIMITING RESISTOR 10 OHMS
TS51	AUXILIARY POWER TOGGLE SWITCH
TS52	ENGINE START TOGGLE SWITCH
TS54	FUNCTION ENABLE SWITCH
TS56	GLOW PLUG TOGGLE SWITCH
TS57	PLATFORM ROTATE TOGGLE SWITCH
TS58	JIB BOOM TOGGLE SWITCH
TS59	PLATFORM LEVEL TOGGLE SWITCH
TS61	PRIMARY BOOM UP/DOWN TOGGLE SWITCH
TS62	TURNTABLE ROTATE TOGGLE SWITCH
TS63	BOOM EXTEND/RETRACT TOGGLE SWITCH

NOTE: DASHED LINES INDICATE OPTION WIRES

Ground Control Box Switch Panel Wiring Diagram, S-65

Deutz F3L-2011 Models (after serial number 11879)

Ground Control Box Terminal Strip Wiring Diagram, S-65, CE Models, Deutz F3L-2011 Models (before serial number 11880)

Ground Control Box Terminal Strip Wiring Diagram, S-65, CE Models

Deutz F3L-2011 Models (before serial number 11880)

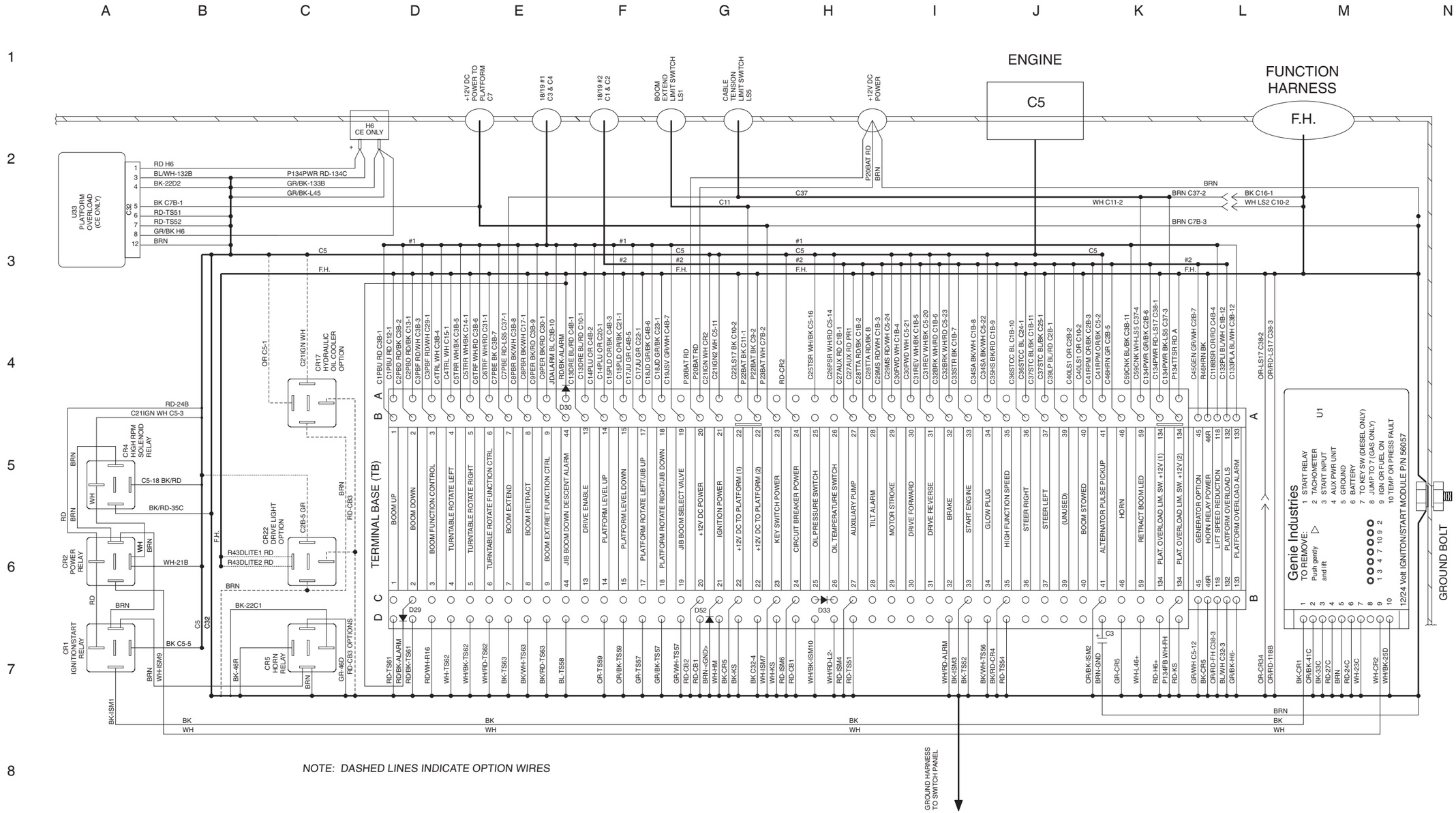

NOTE: DASHED LINES INDICATE OPTION WIRES

Ground Control Box Switch Panel Wiring Diagram, S-65, CE Models

Deutz F3L-2011 Models (before serial number 11880)

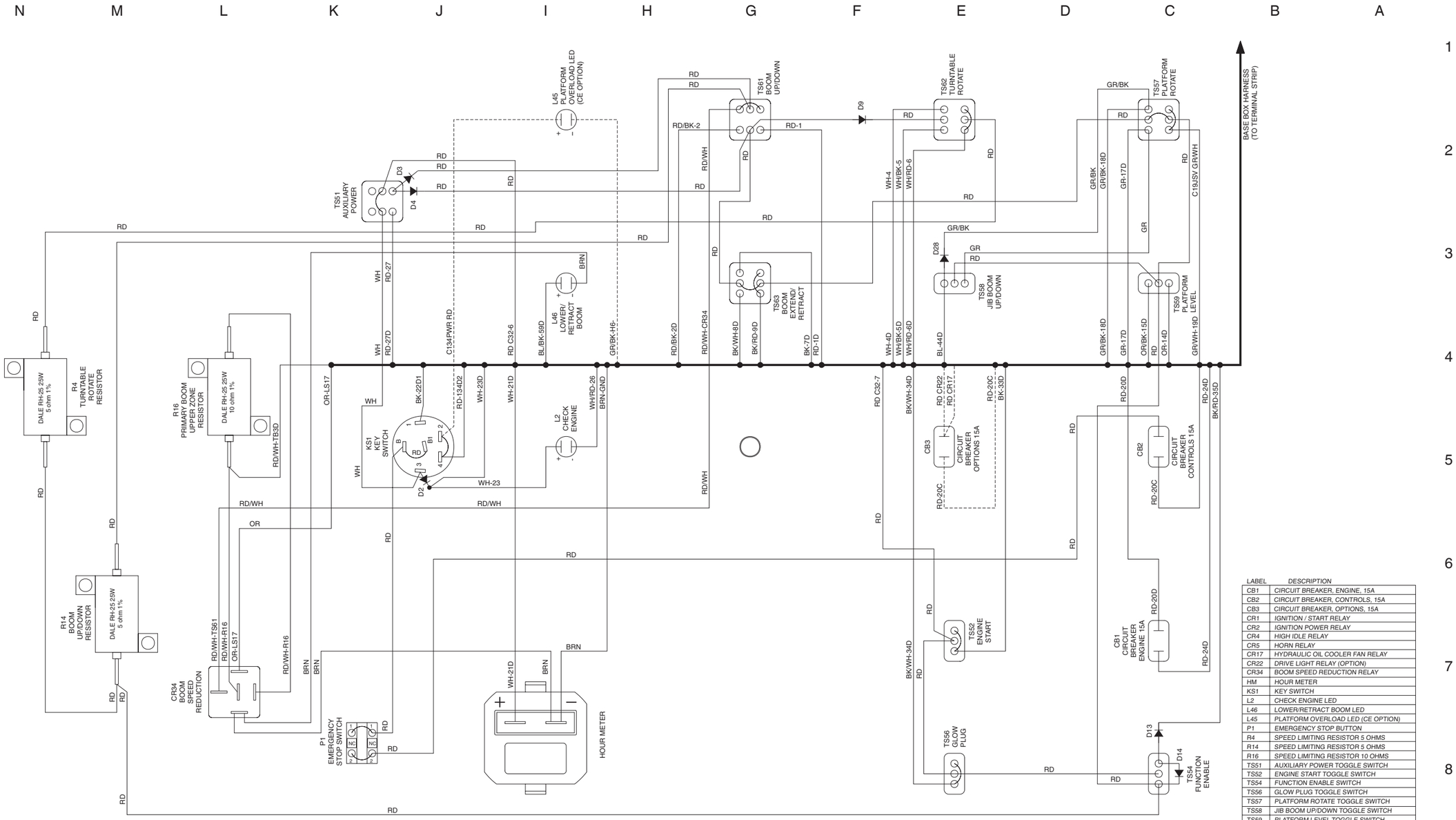

LABEL	DESCRIPTION
CB1	CIRCUIT BREAKER, ENGINE, 15A
CB2	CIRCUIT BREAKER, CONTROLS, 15A
CB3	CIRCUIT BREAKER, OPTIONS, 15A
CR1	IGNITION / START RELAY
CR2	IGNITION POWER RELAY
CR4	HIGH IDLE RELAY
CR5	HORN RELAY
CR17	HYDRAULIC OIL COOLER FAN RELAY
CR22	DRIVE LIGHT RELAY (OPTION)
CR34	BOOM SPEED REDUCTION RELAY
HM	HOUR METER
KS1	KEY SWITCH
L2	CHECK ENGINE LED
L46	LOWER/RETRACT BOOM LED
L45	PLATFORM OVERLOAD LED (CE OPTION)
P1	EMERGENCY STOP BUTTON
R4	SPEED LIMITING RESISTOR 5 OHMS
R14	SPEED LIMITING RESISTOR 5 OHMS
R16	SPEED LIMITING RESISTOR 10 OHMS
TS51	AUXILIARY POWER TOGGLE SWITCH
TS52	ENGINE START TOGGLE SWITCH
TS54	FUNCTION ENABLE SWITCH
TS56	GLOW PLUG TOGGLE SWITCH
TS57	PLATFORM ROTATE TOGGLE SWITCH
TS58	JIB BOOM UP/DOWN TOGGLE SWITCH
TS59	PLATFORM LEVEL TOGGLE SWITCH
TS61	PRIMARY BOOM UP/DOWN TOGGLE SWITCH
TS62	TURNTABLE ROTATE TOGGLE SWITCH
TS63	BOOM EXTEND/RETRACT TOGGLE SWITCH

NOTE: DASHED LINES INDICATE OPTION WIRES

Ground Control Box Switch Panel Wiring Diagram, S-65, CE Models

Deutz F3L-2011 Models (before serial number 11880)

Ground Control Box Terminal Strip Wiring Diagram, S-65, CE Models, Deutz F3L-2011 Models (after serial number 11879)

Ground Control Box Terminal Strip Wiring Diagram, S-65, CE Models

Deutz F3L-2011 Models (after serial number 11879)

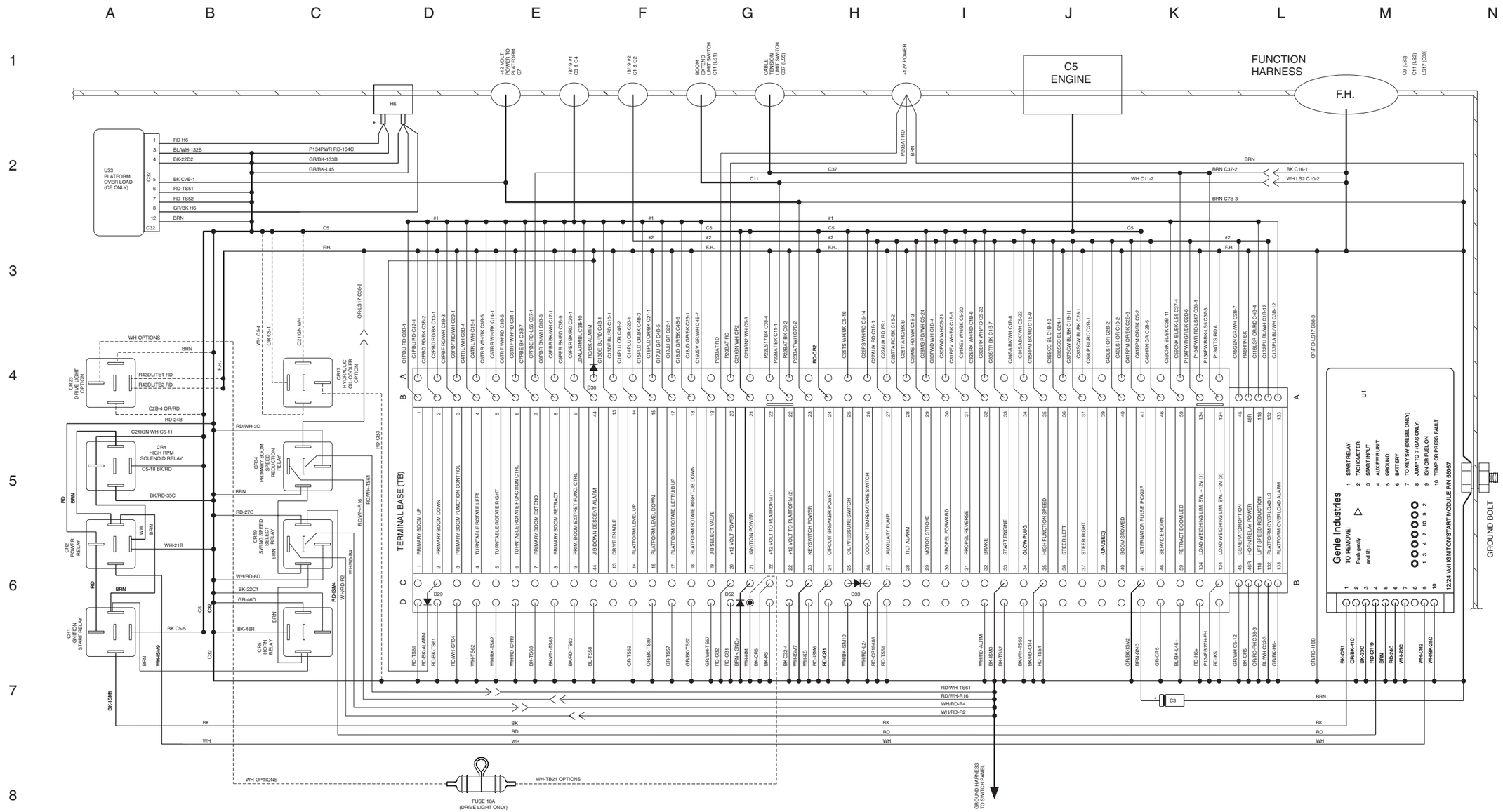

Ground Control Box Switch Panel Wiring Diagram, S-65, CE Models

Deutz F3L-2011 Models (after serial number 11879)

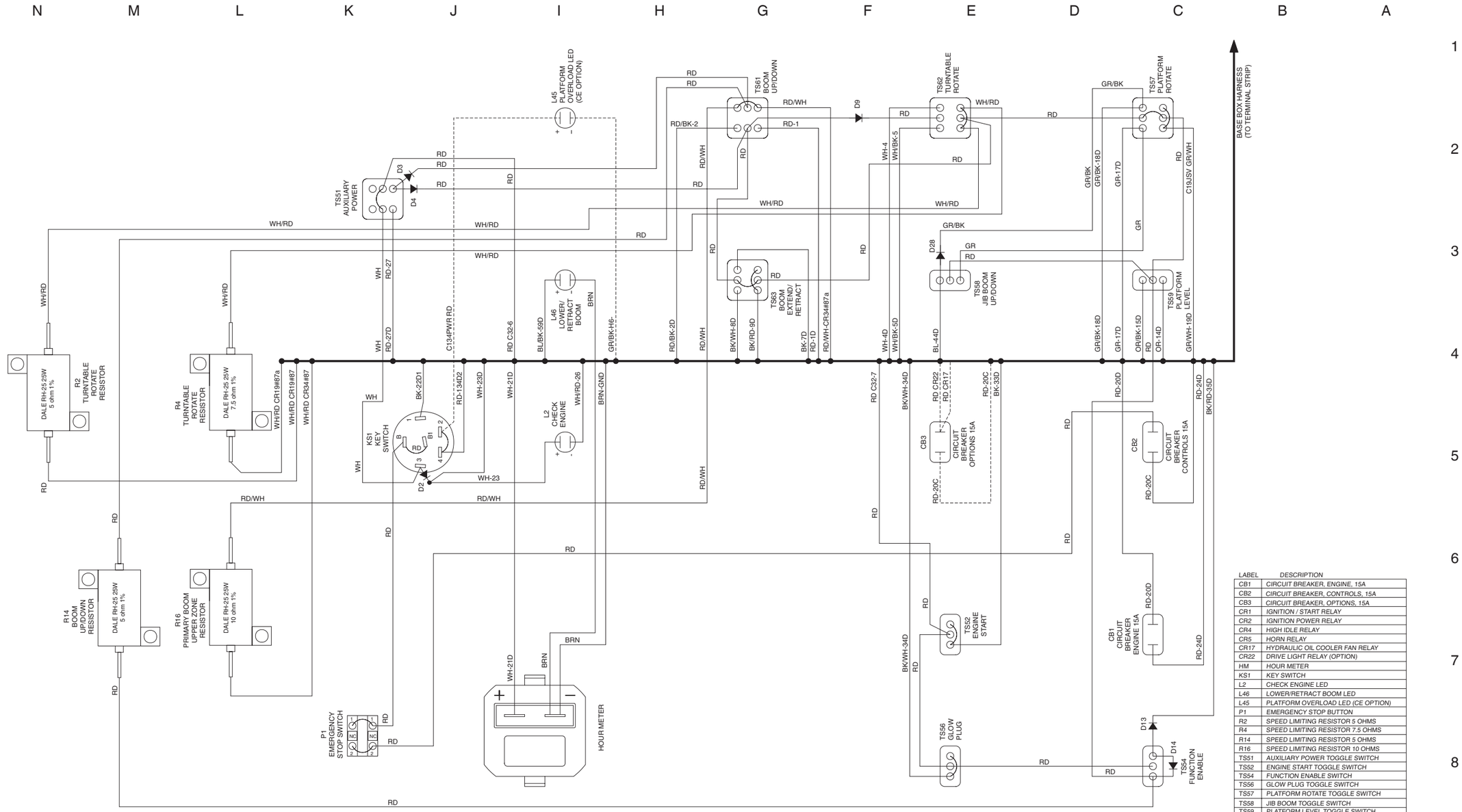

LABEL	DESCRIPTION
CB1	CIRCUIT BREAKER, ENGINE, 15A
CB2	CIRCUIT BREAKER, CONTROLS, 15A
CB3	CIRCUIT BREAKER, OPTIONS, 15A
CR1	IGNITION / START RELAY
CR2	IGNITION POWER RELAY
CR4	HIGH IDLE RELAY
CR5	HORN RELAY
CR17	HYDRAULIC OIL COOLER FAN RELAY
CR22	DRIVE LIGHT RELAY (OPTION)
HM	HOUR METER
KS1	KEY SWITCH
L2	CHECK ENGINE LED
L46	LOWER/RETRACT BOOM LED
L45	PLATFORM OVERLOAD LED (CE OPTION)
P1	EMERGENCY STOP BUTTON
R2	SPEED LIMITING RESISTOR 5 OHMS
R4	SPEED LIMITING RESISTOR 7.5 OHMS
R14	SPEED LIMITING RESISTOR 5 OHMS
R16	SPEED LIMITING RESISTOR 10 OHMS
TS51	AUXILIARY POWER TOGGLE SWITCH
TS52	ENGINE START TOGGLE SWITCH
TS54	FUNCTION ENABLE SWITCH
TS56	GLOW PLUG TOGGLE SWITCH
TS57	PLATFORM ROTATE TOGGLE SWITCH
TS58	JIB BOOM TOGGLE SWITCH
TS59	PLATFORM LEVEL TOGGLE SWITCH
TS61	PRIMARY BOOM UP/DOWN TOGGLE SWITCH
TS62	TURNTABLE ROTATE TOGGLE SWITCH
TS63	BOOM EXTEND/RETRACT TOGGLE SWITCH

NOTE: DASHED LINES INDICATE OPTION WIRES

Ground Control Box Switch Panel Wiring Diagram, S-65, CE Models

Deutz F3L-2011 Models (after serial number 11879)

Platform Control Box Wiring Diagram, S-65

Deutz F3L-2011 Models

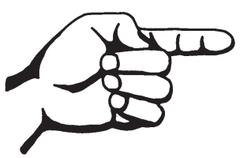

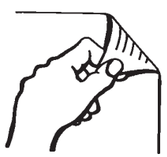

Platform Control Box Wiring Diagram, S-65

Deutz F3L-2011 Models

ITEM	DESCRIPTION
H1	TILT ALARM
C7P	12V DC PLATFORM POWER CONNECTOR
C9	FOOT SWITCH CONNECTOR
C1P-C4P	48 PIN CONNECTOR BLOCK
U13	ALC-500 CONTROL BOARD
J1	CONTROL BOARD INPUT CONNECTOR
J2	CONTROL BOARD OUTPUT CONNECTOR
J3	CONTROL BOARD POWER CONNECTOR
CR27	CONTROL RELAY (CE OPTION)
CR30	CONTROL RELAY (CE OPTION)
LS18	LOAD SENSE LIMIT SWITCH

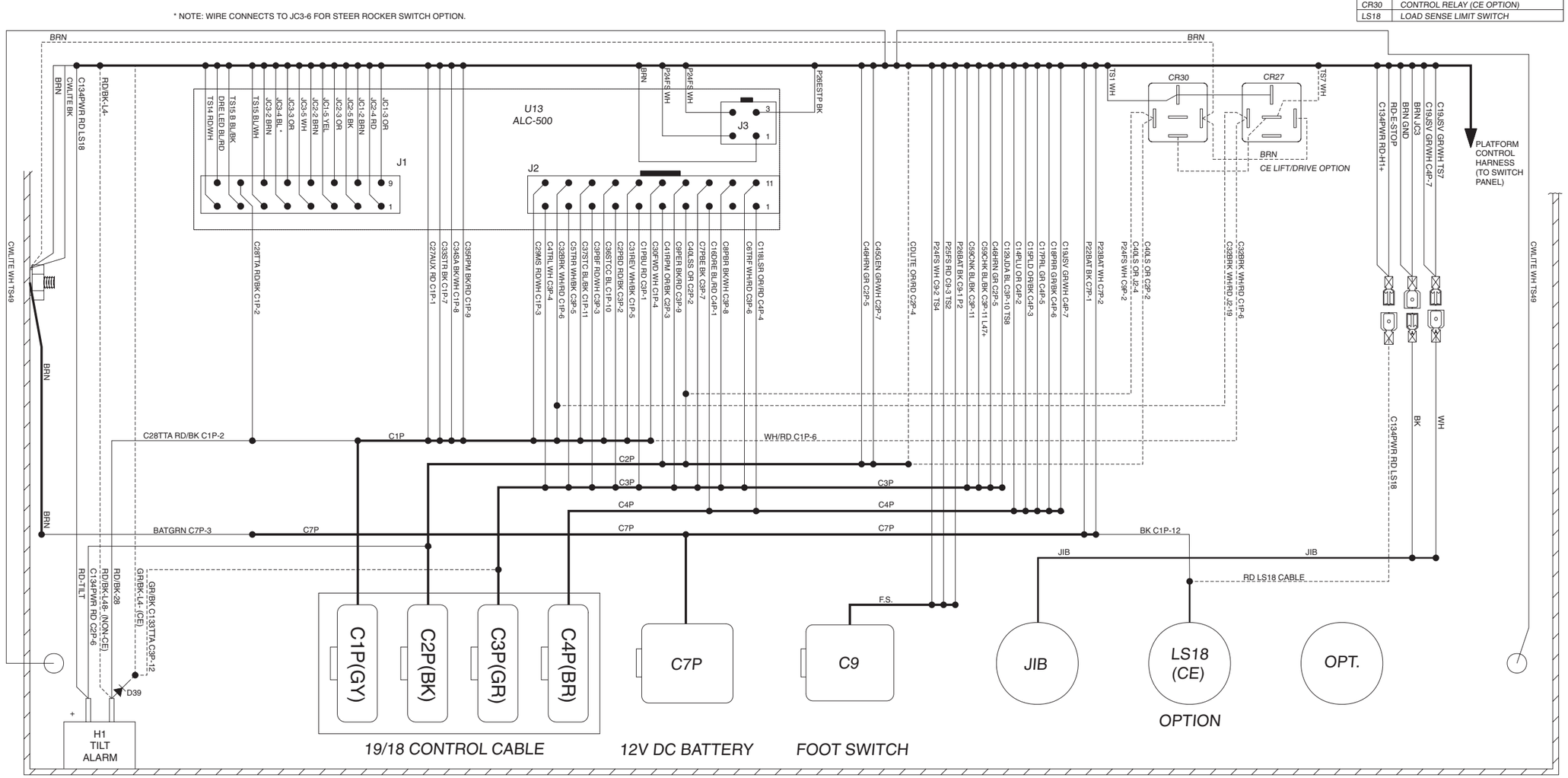

Platform Control Box Switch Panel Wiring Diagram, S-65

Deutz F3L-2011 Models

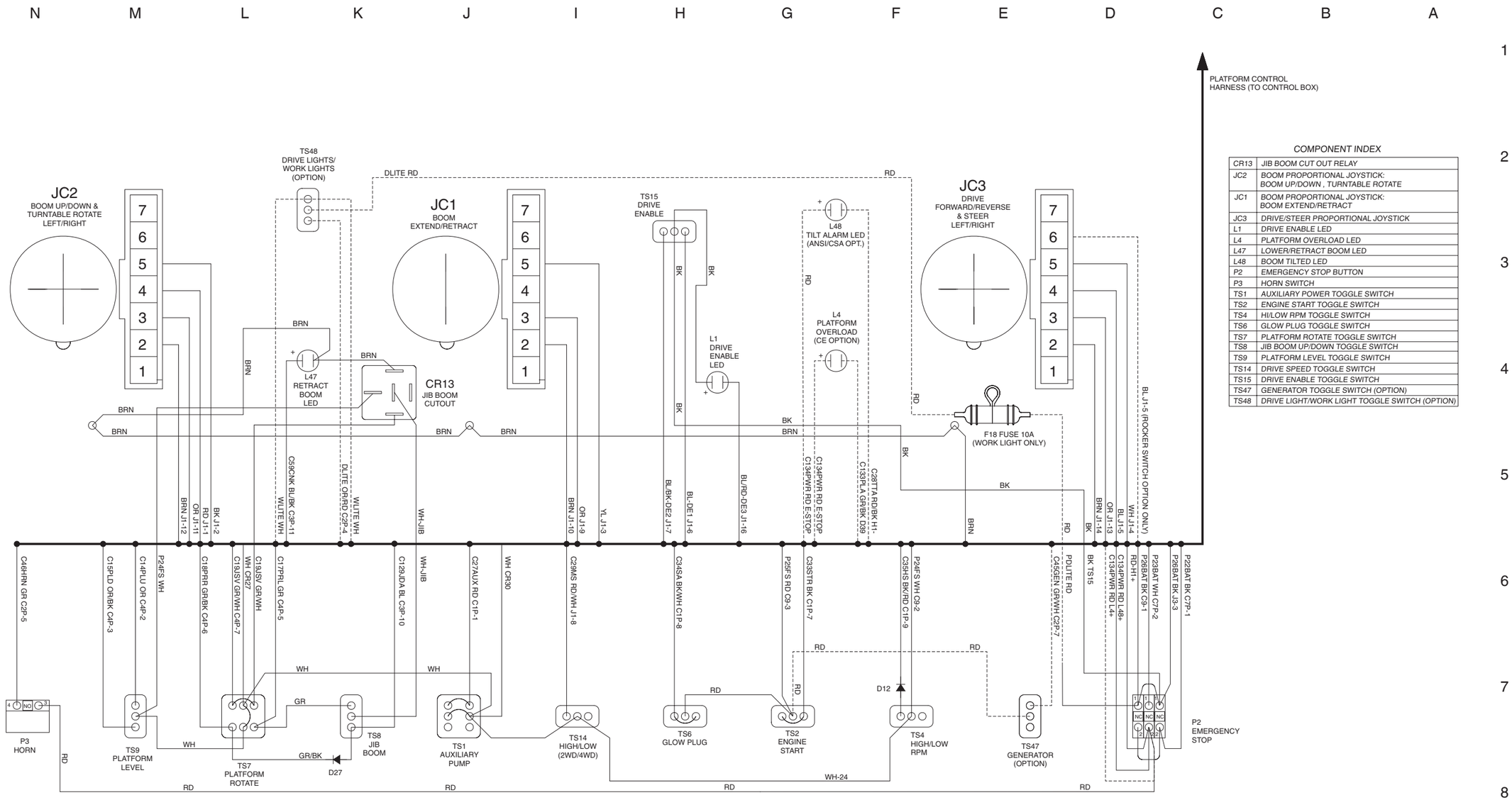

COMPONENT INDEX

CR13	*JIB BOOM CUT OUT RELAY*
JC2	*BOOM PROPORTIONAL JOYSTICK: BOOM UP/DOWN , TURNTABLE ROTATE*
JC1	*BOOM PROPORTIONAL JOYSTICK: BOOM EXTEND/RETRACT*
JC3	*DRIVE/STEER PROPORTIONAL JOYSTICK*
L1	*DRIVE ENABLE LED*
L4	*PLATFORM OVERLOAD LED*
L47	*LOWER/RETRACT BOOM LED*
L48	*BOOM TILTED LED*
P2	*EMERGENCY STOP BUTTON*
P3	*HORN SWITCH*
TS1	*AUXILIARY POWER TOGGLE SWITCH*
TS2	*ENGINE START TOGGLE SWITCH*
TS4	*HI/LOW RPM TOGGLE SWITCH*
TS6	*GLOW PLUG TOGGLE SWITCH*
TS7	*PLATFORM ROTATE TOGGLE SWITCH*
TS8	*JIB BOOM UP/DOWN TOGGLE SWITCH*
TS9	*PLATFORM LEVEL TOGGLE SWITCH*
TS14	*DRIVE SPEED TOGGLE SWITCH*
TS15	*DRIVE ENABLE TOGGLE SWITCH*
TS47	*GENERATOR TOGGLE SWITCH (OPTION)*
TS48	*DRIVE LIGHT/WORK LIGHT TOGGLE SWITCH (OPTION)*

NOTE: DASHED LINES INDICATE OPTION WIRES

Platform Control Box Switch Panel Wiring Diagram, S-65

Deutz F3L-2011 Models

Electrical Schematic, S-60

Perkins 404-22 Models (before serial number 11880)

Electrical Schematic, S-60

Perkins 404-22 Models (before serial number 11880)

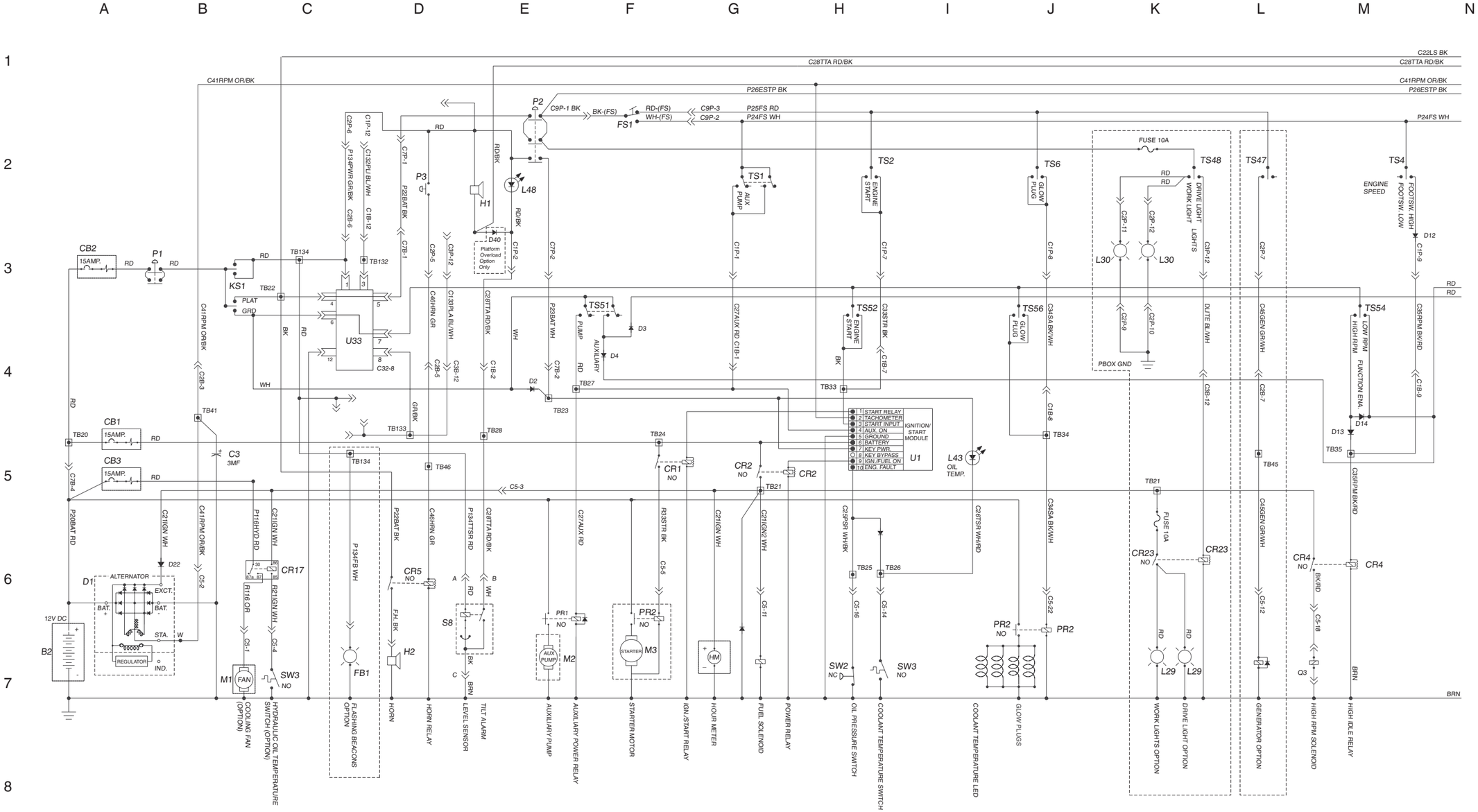

NOTES:
1 CE AND PLATFORM OVERLOAD OPTION ONLY.

Electrical Schematic, S-60

Perkins 404-22 Models (before serial number 11880)

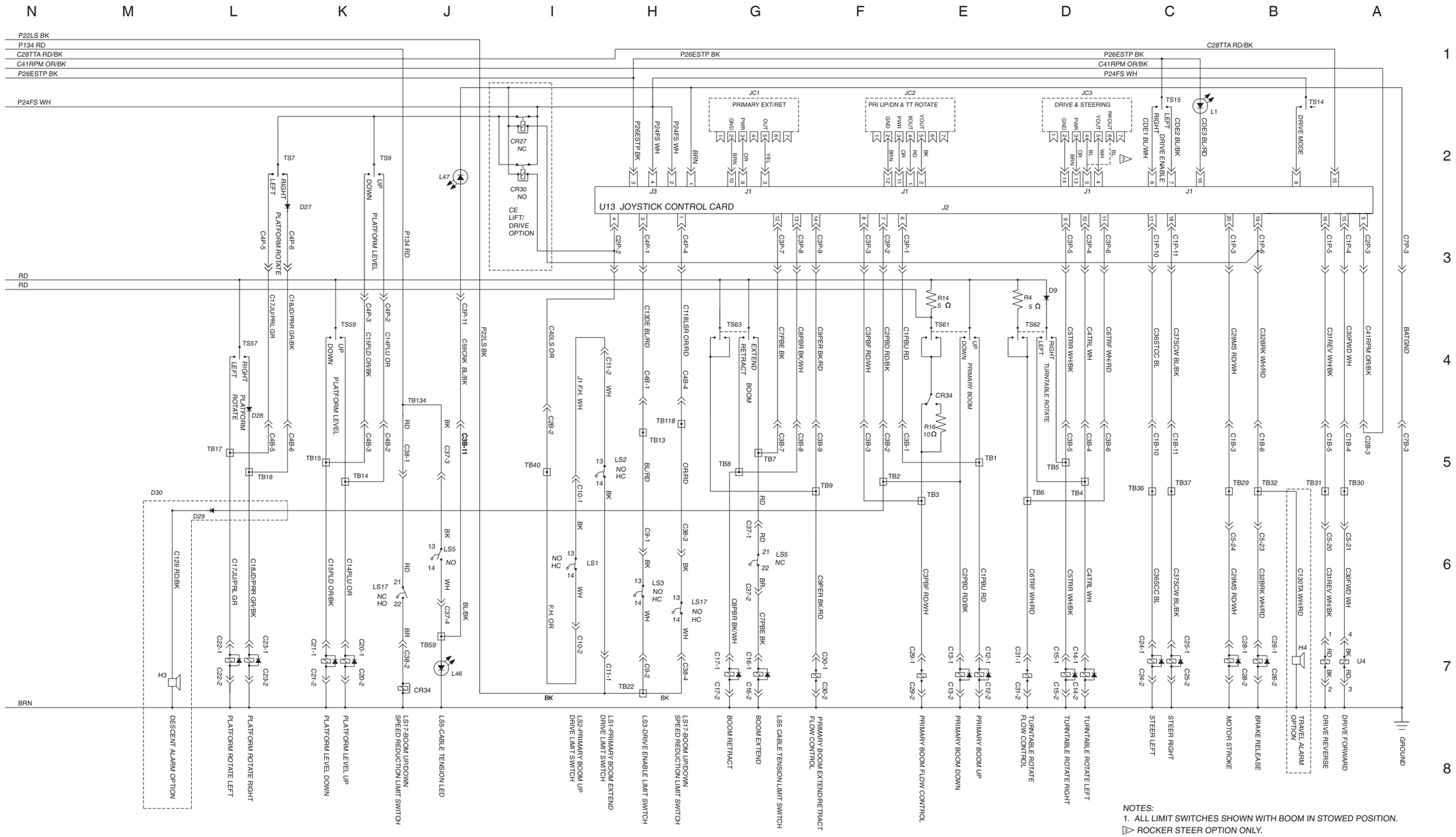

NOTES:
1. ALL LIMIT SWITCHES SHOWN WITH BOOM IN STOWED POSITION.
▷ ROCKER STEER OPTION ONLY.

Electrical Schematic, S-60

Perkins 404-22 Models (before serial number 11880)

Electrical Schematic, S-60

Perkins 404-22 Models (after serial number 11879)

Electrical Schematic, S-60

Perkins 404-22 Models (after serial number 11879)

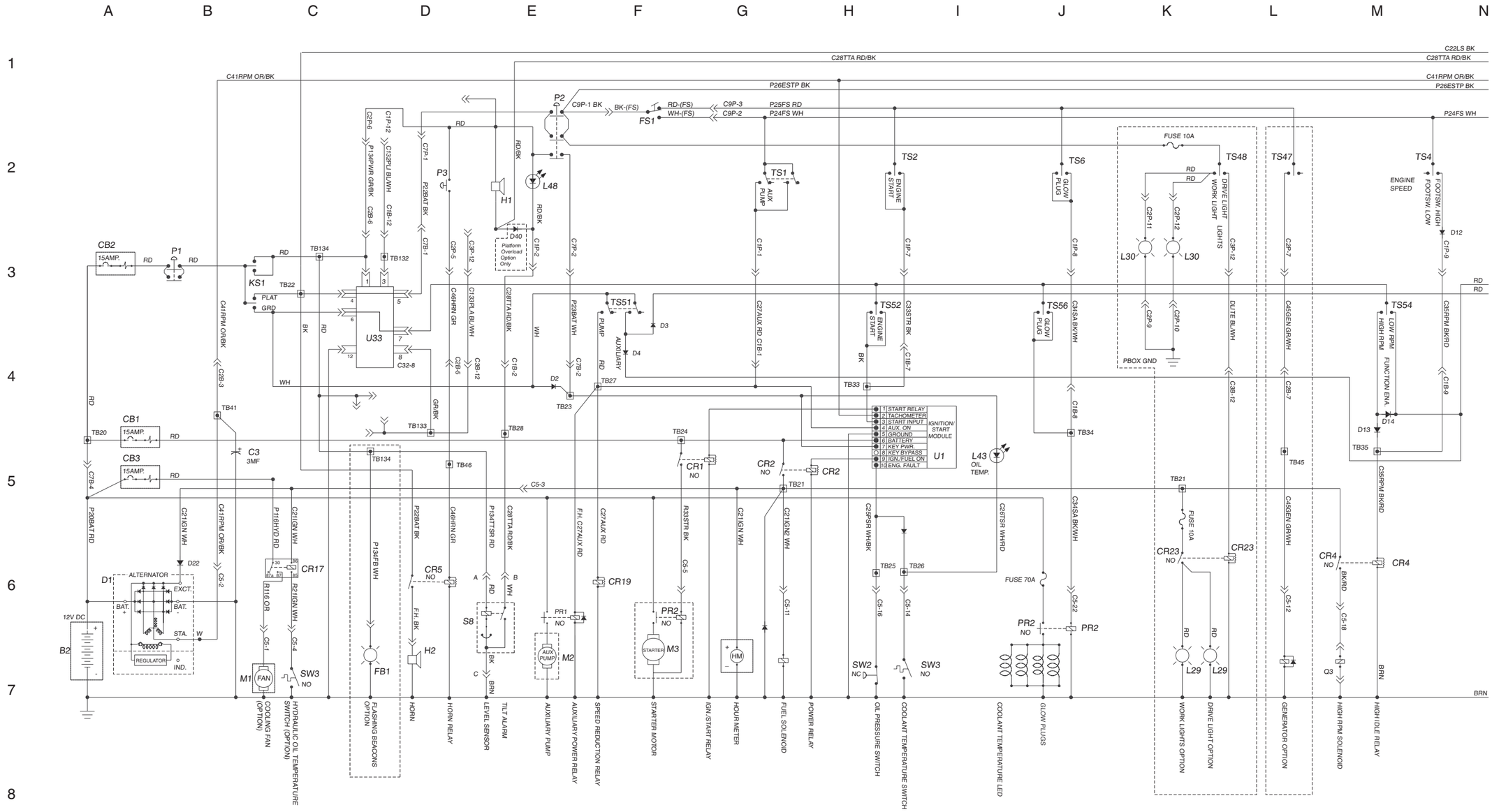

NOTES:

1 CE AND PLATFORM OVERLOAD OPTION ONLY.

Electrical Schematic, S-60

Perkins 404-22 Models (after serial number 11879)

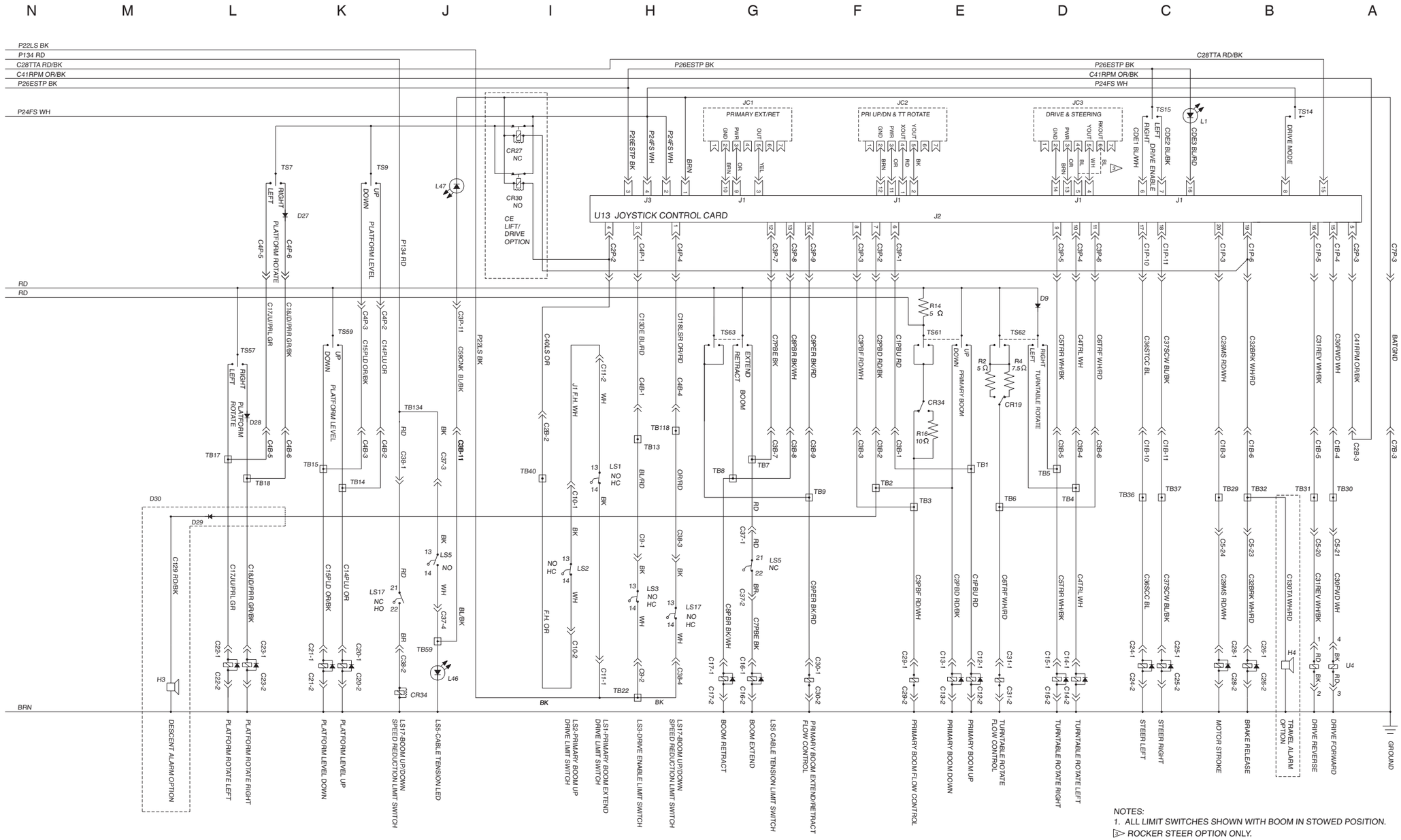

NOTES:
1. ALL LIMIT SWITCHES SHOWN WITH BOOM IN STOWED POSITION.
▷ ROCKER STEER OPTION ONLY.

Electrical Schematic, S-60

Perkins 404-22 Models (after serial number 11879)

Ground Control Box Terminal Strip Wiring Diagram, S-60

Perkins 404-22 Models (before serial number 11880)

Ground Control Box Terminal Strip Wiring Diagram, S-60

Perkins 404-22 Models (before serial number 11880)

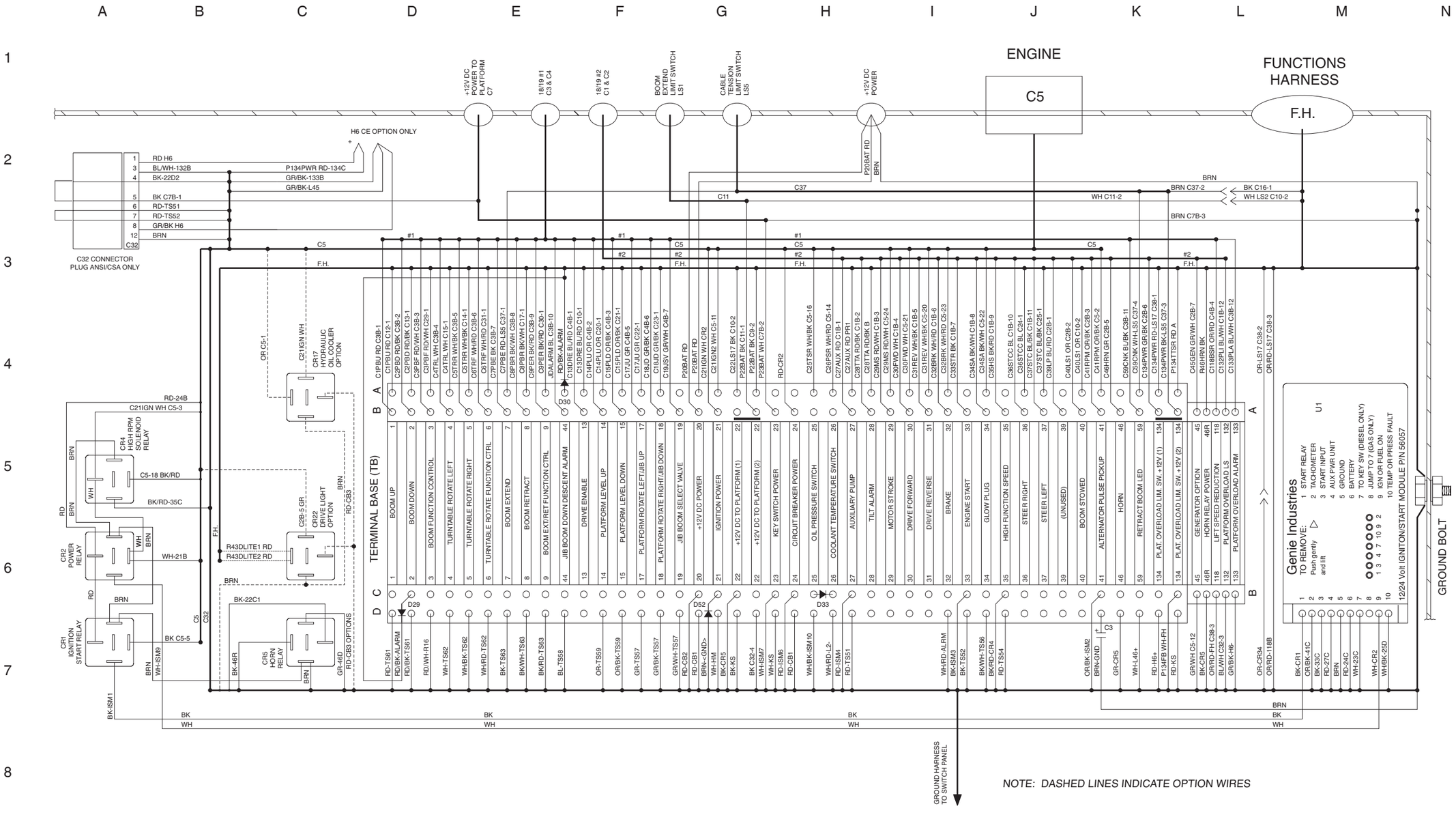

Ground Control Box Switch Panel Wiring Diagram, S-60

Perkins 404-22 Models (before serial number 11880)

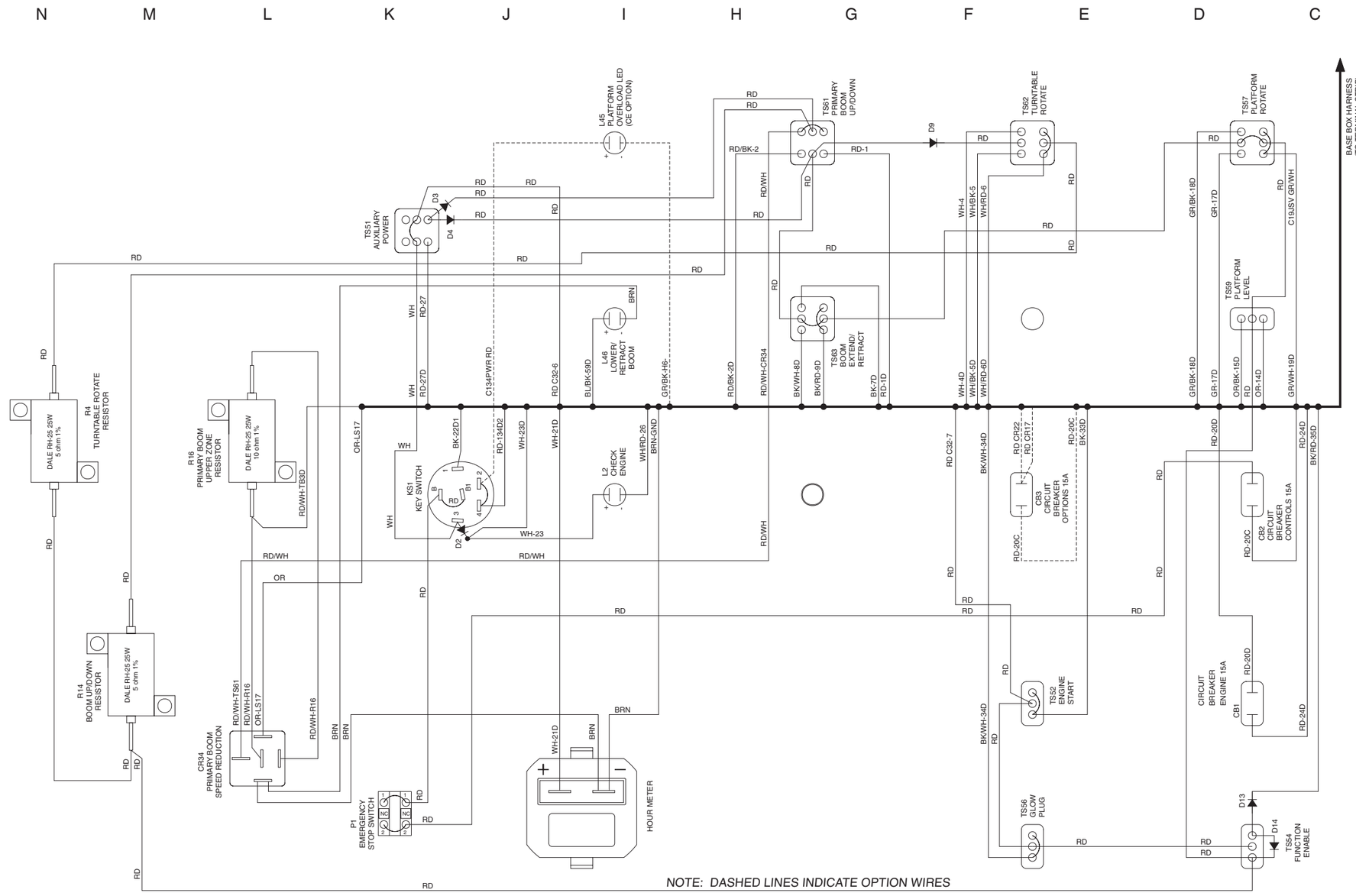

LABEL	DESCRIPTION
CB1	CIRCUIT BREAKER, ENGINE, 15A
CB2	CIRCUIT BREAKER, CONTROLS, 15A
CB3	CIRCUIT BREAKER, OPTIONS, 15A
CR1	IGNITION / START RELAY
CR2	IGNITION POWER RELAY
CR4	HIGH IDLE RELAY
CR5	HORN RELAY
CR17	HYDRAULIC OIL COOLER RELAY
CR22	DRIVE LIGHT RELAY (OPTION)
CR34	BOOM SPEED REDUCTION RELAY
HM	HOUR METER
KS1	KEY SWITCH
L2	CHECK ENGINE LED
L46	LOWER/RETRACT BOOM LED
L45	PLATFORM OVERLOAD LED (CE OPTION)
P1	EMERGENCY STOP BUTTON
R4	SPEED LIMITING RESISTOR 5 OHMS
R14	SPEED LIMITING RESISTOR 5 OHMS
R16	SPEED LIMITING RESISTOR 10 OHMS
TS51	AUXILIARY TOGGLE SWITCH
TS52	ENGINE START TOGGLE SWITCH
TS54	FUNCTION ENABLE TOGGLE SWITCH
TS56	GLOW PLUG TOGGLE SWITCH
TS57	PLATFORM ROTATE TOGGLE SWITCH
TS59	PLATFORM LEVEL TOGGLE SWITCH
TS61	BOOM UP/DOWN TOGGLE SWITCH
TS62	TURNTABLE ROTATE TOGGLE SWITCH
TS63	BOOM EXTEND/RETRACT TOGGLE SWITCH

Ground Control Box Switch Panel Wiring Diagram, S-60

Perkins 404-22 Models (before serial number 11880)

Ground Control Box Terminal Strip Wiring Diagram, S-60

Perkins 404-22 Models (after serial number 11879)

Ground Control Box Terminal Strip Wiring Diagram, S-60

Perkins 404-22 Models (after serial number 11879)

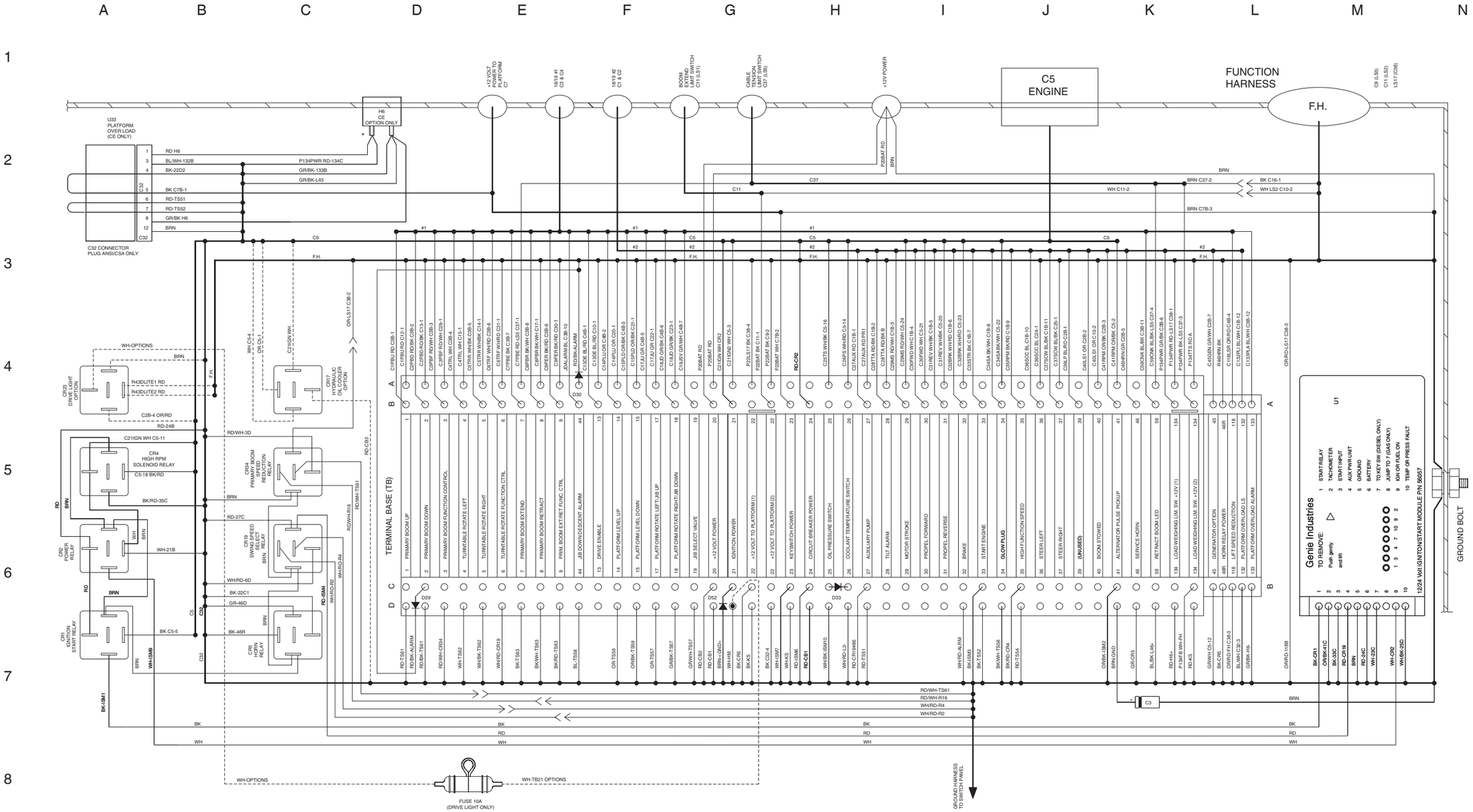

Ground Control Box Switch Panel Wiring Diagram, S-60

Perkins 404-22 Models (after serial number 11879)

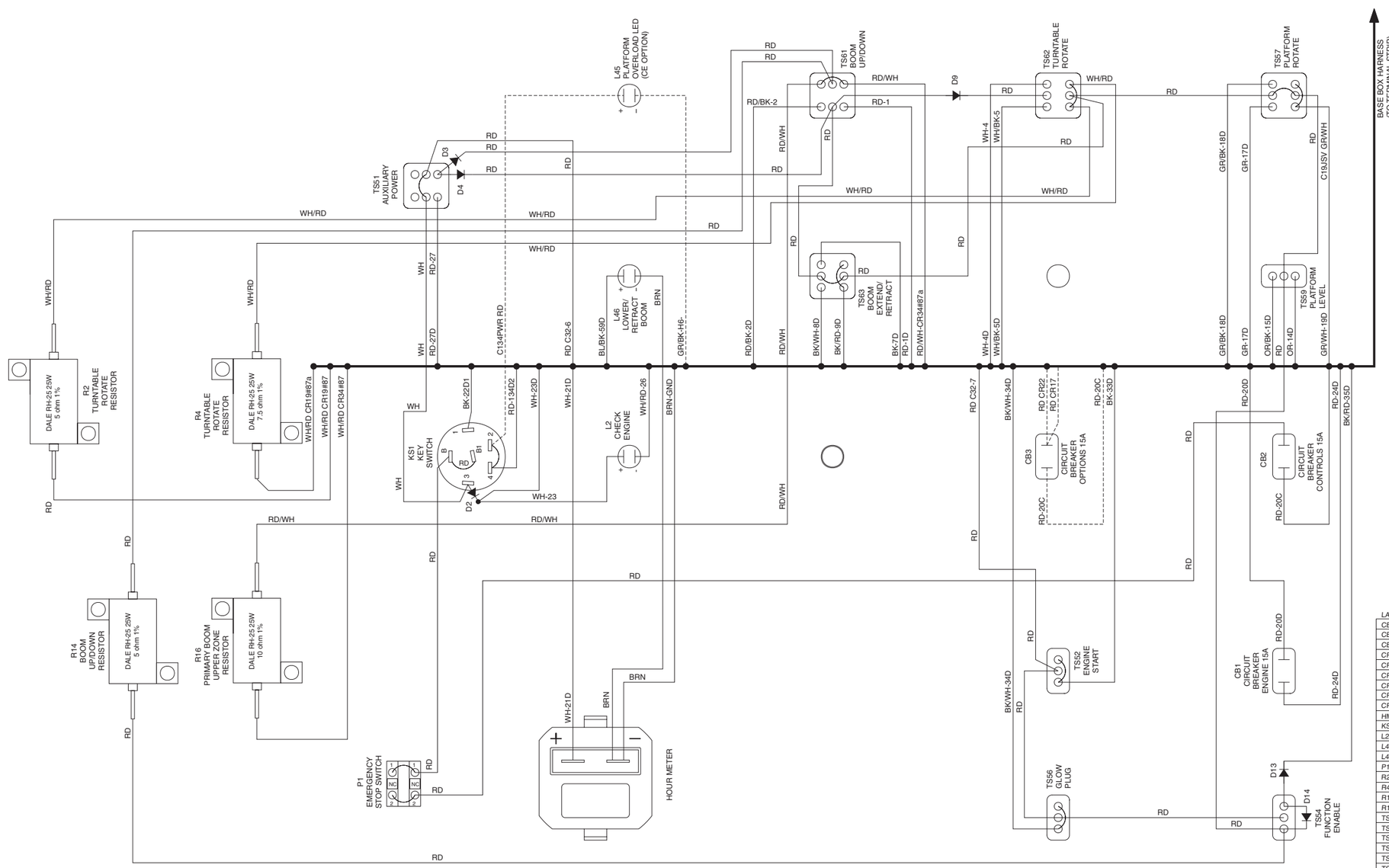

LABEL	DESCRIPTION
CB1	CIRCUIT BREAKER, ENGINE, 15A
CB2	CIRCUIT BREAKER, CONTROLS, 15A
CB3	CIRCUIT BREAKER, OPTIONS, 15A
CR1	IGNITION / START RELAY
CR2	IGNITION POWER RELAY
CR4	HIGH IDLE RELAY
CR5	HORN RELAY
CR17	HYDRAULIC OIL COOLER FAN RELAY
CR22	DRIVE LIGHT RELAY (OPTION)
HM	HOUR METER
KS1	KEY SWITCH
L2	CHECK ENGINE LED
L46	LOWER/RETRACT BOOM LED
L45	PLATFORM OVERLOAD LED (CE OPTION)
P1	EMERGENCY STOP BUTTON
R2	SPEED LIMITING RESISTOR 5 OHMS
R4	SPEED LIMITING RESISTOR 7.5 OHMS
R14	SPEED LIMITING RESISTOR 5 OHMS
R16	SPEED LIMITING RESISTOR 10 OHMS
TS51	AUXILIARY POWER TOGGLE SWITCH
TS52	ENGINE START TOGGLE SWITCH
TS54	FUNCTION ENABLE SWITCH
TS56	GLOW PLUG TOGGLE SWITCH
TS57	PLATFORM ROTATE TOGGLE SWITCH
TS59	PLATFORM LEVEL TOGGLE SWITCH
TS61	PRIMARY BOOM UP/DOWN TOGGLE SWITCH
TS62	TURNTABLE ROTATE TOGGLE SWITCH
TS63	BOOM EXTEND/RETRACT TOGGLE SWITCH

NOTE: DASHED LINES INDICATE OPTION WIRES

Ground Control Box Switch Panel Wiring Diagram, S-60

Perkins 404-22 Models (after serial number 11879)

Platform Control Box Wiring Diagram, S-60

Perkins 404-22 Models

Platform Control Box Wiring Diagram, S-60

Perkins 404-22 Models

ITEM	DESCRIPTION
H1	TILT ALARM
C7P	12V DC PLATFORM POWER CONNECTOR
C9	FOOTSWITCH CONNECTOR
C1P-C4P	48 PIN CONNECTOR BLOCK
U13	ALC-500 CONTROL BOARD
J1	CONTROL BOARD INPUT CONNECTOR
J2	CONTROL BOARD OUTPUT CONNECTOR
J3	CONTROL BOARD POWER CONNECTOR
CR27	CONTROL RELAY (CE OPTION)
CR30	CONTROL RELAY (CE OPTION)
LS18	LOAD SENSE LIMIT SWITCH

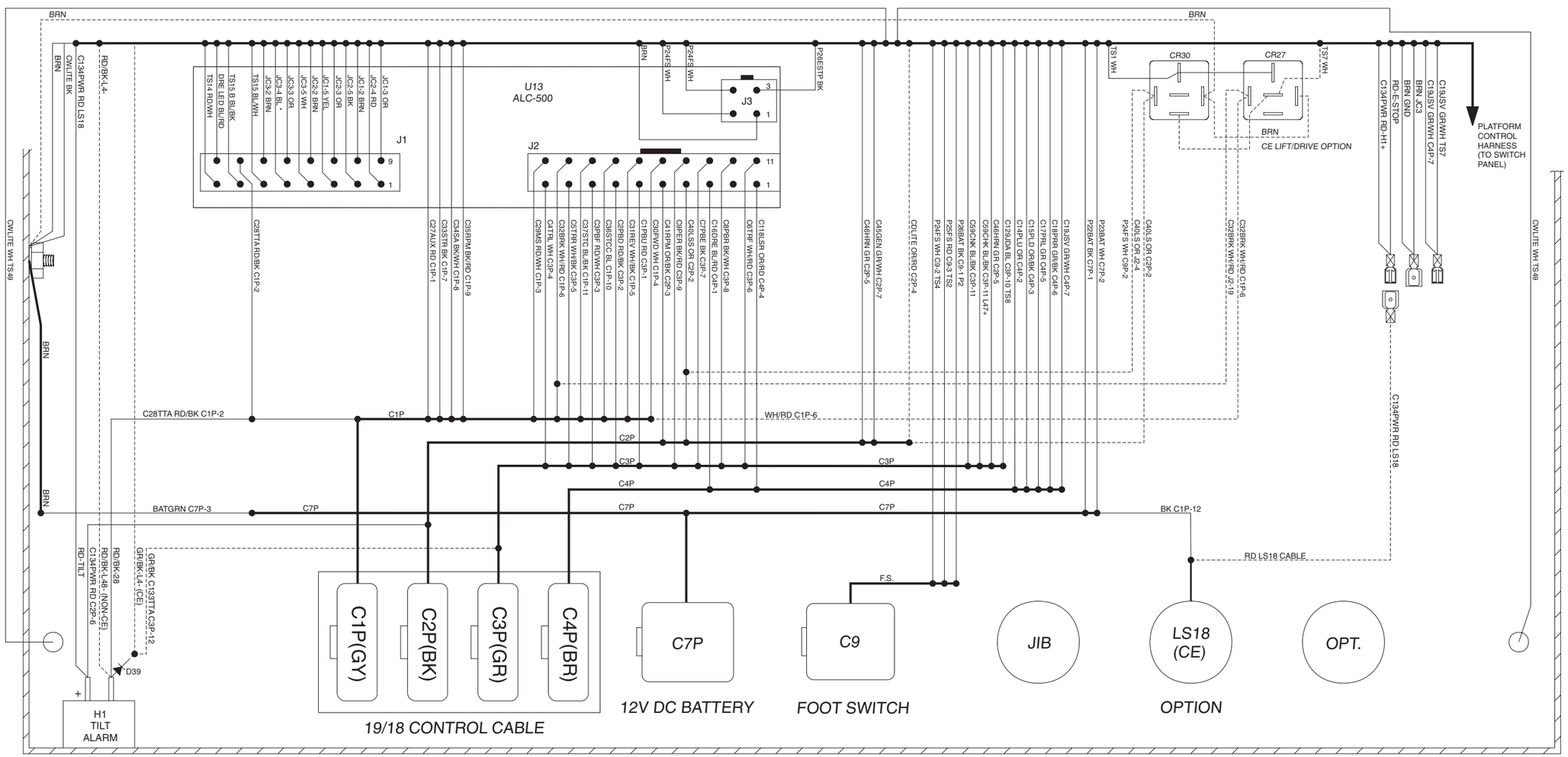

Platform Control Box Switch Panel Wiring Diagram, S-60

Perkins 404-22 Models

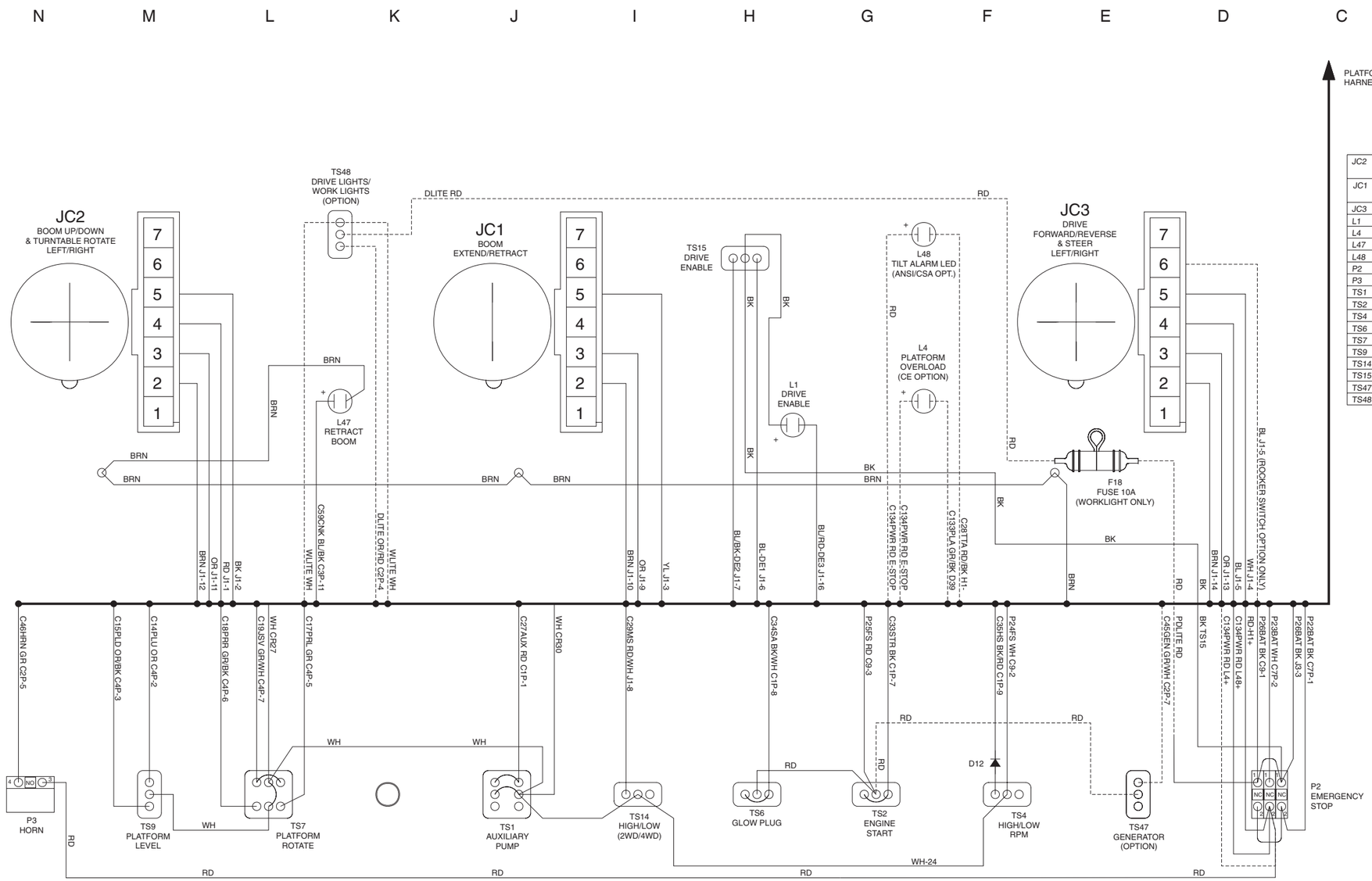

COMPONENT INDEX

JC2	BOOM PROPORTIONAL JOYSTICK: BOOM UP/DOWN , TURNTABLE ROTATE
JC1	BOOM PROPORTIONAL JOYSTICK: BOOM EXTEND/RETRACT
JC3	DRIVE/STEER PROPORTIONAL JOYSTICK
L1	DRIVE ENABLE LED
L4	PLATFORM OVERLOAD LED
L47	LOWER/RETRACT BOOM LED
L48	BOOM TILTED LED
P2	EMERGENCY STOP BUTTON
P3	HORN SWITCH
TS1	AUXILIARY TOGGLE SWITCH
TS2	ENGINE START TOGGLE SWITCH
TS4	HI/LOW RPM TOGGLE SWITCH
TS6	GLOW PLUG TOGGLE SWITCH
TS7	PLATFORM ROTATE TOGGLE SWITCH
TS9	PLATFORM LEVEL TOGGLE SWITCH
TS14	DRIVE SPEED TOGGLE SWITCH
TS15	DRIVE ENABLE TOGGLE SWITCH
TS47	GENERATOR TOGGLE SWITCH (OPTION)
TS48	DRIVE LIGHT/WORK LIGHT TOGGLE SWITCH (OPTION)

NOTE: DASHED LINES INDICATE OPTION WIRES

Platform Control Box Switch Panel Wiring Diagram, S-60

Perkins 404-22 Models

Electrical Schematic, S-65

Perkins 404-22 Models (before serial number 11880)

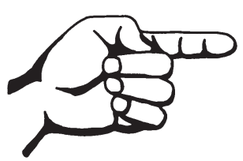

Electrical Schematic, S-65

Perkins 404-22 Models (before serial number 11880)

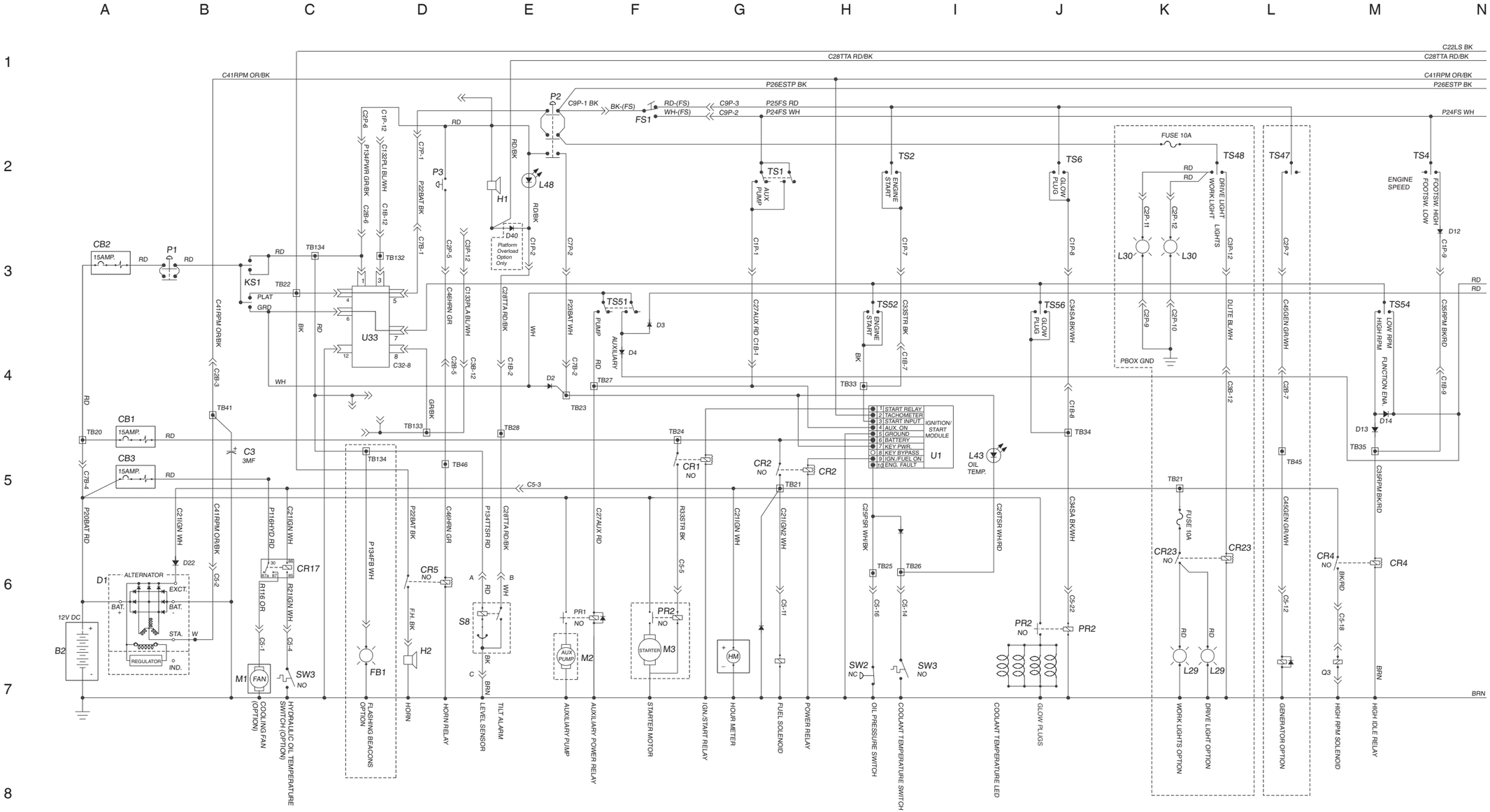

NOTES:
CE AND PLATFORM OVERLOAD OPTION ONLY.

Electrical Schematic, S-65

Perkins 404-22 Models (before serial number 11880)

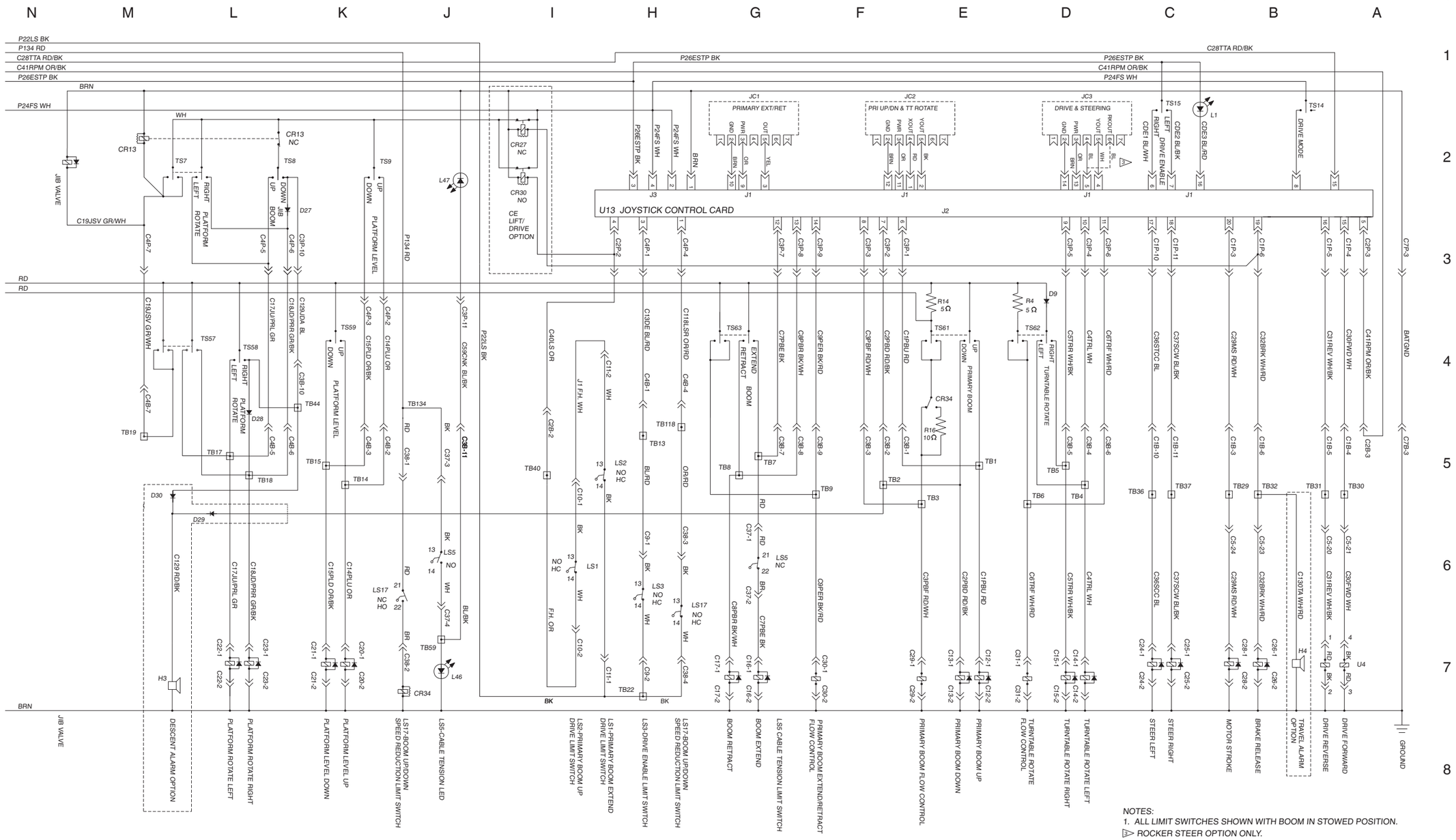

NOTES:
1. ALL LIMIT SWITCHES SHOWN WITH BOOM IN STOWED POSITION.
▷ ROCKER STEER OPTION ONLY.

Electrical Schematic, S-65

Perkins 404-22 Models (before serial number 11880)

Electrical Schematic, S-65

Perkins 404-22 Models (after serial number 11879)

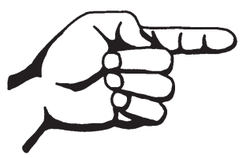

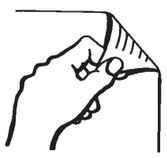

Electrical Schematic, S-65

Perkins 404-22 Models (after serial number 11879)

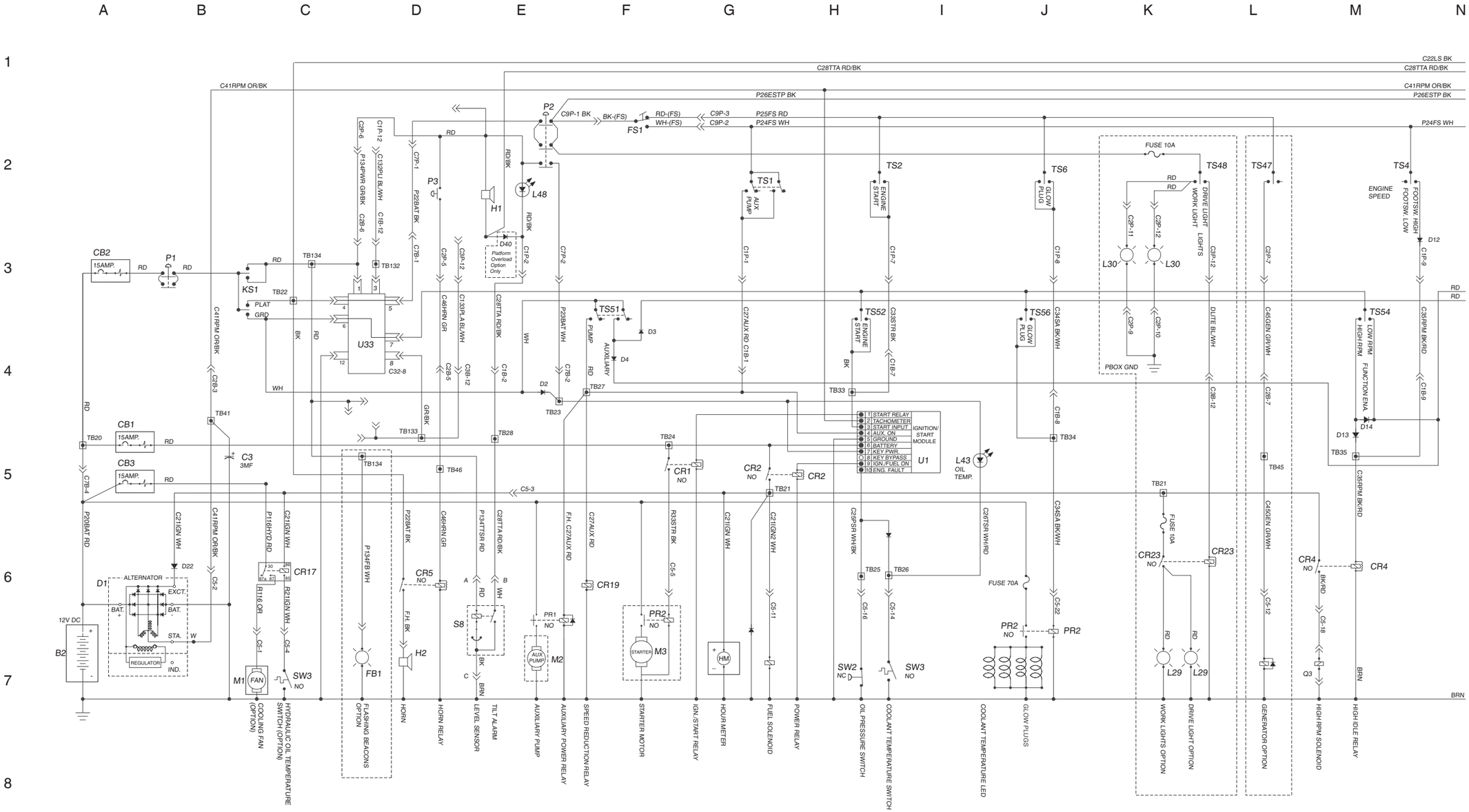

NOTES:
▷ CE AND PLATFORM OVERLOAD OPTION ONLY.

Electrical Schematic, S-65

Perkins 404-22 Models (after serial number 11879)

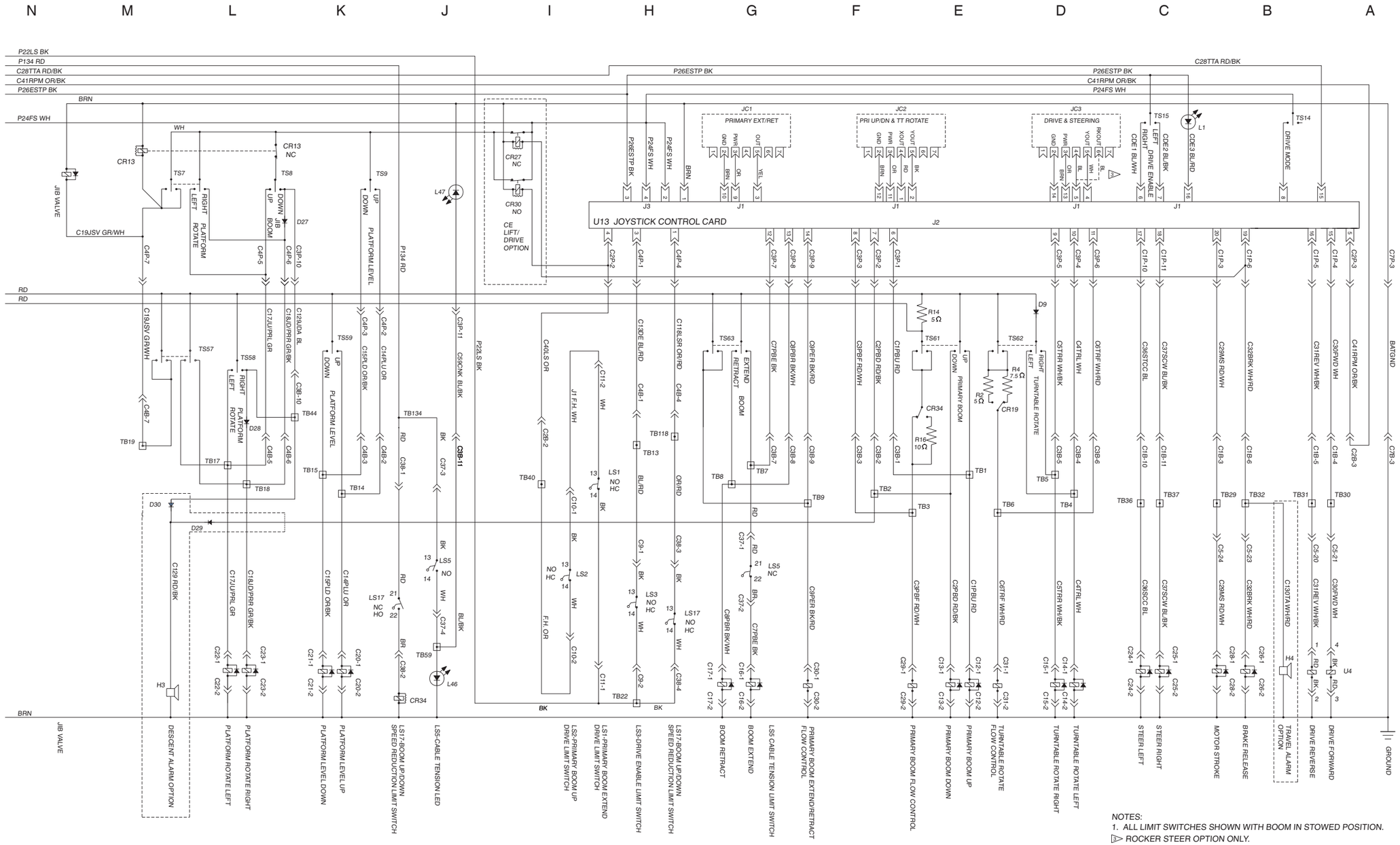

NOTES:
1. ALL LIMIT SWITCHES SHOWN WITH BOOM IN STOWED POSITION.
ROCKER STEER OPTION ONLY.

Electrical Schematic, S-65

Perkins 404-22 Models (after serial number 11879)

Ground Control Box Terminal Strip Wiring Diagram, S-65

Perkins 404-22 Models (before serial number 11880)

Ground Control Box Terminal Strip Wiring Diagram, S-65

Perkins 404-22 Models (before serial number 11880)

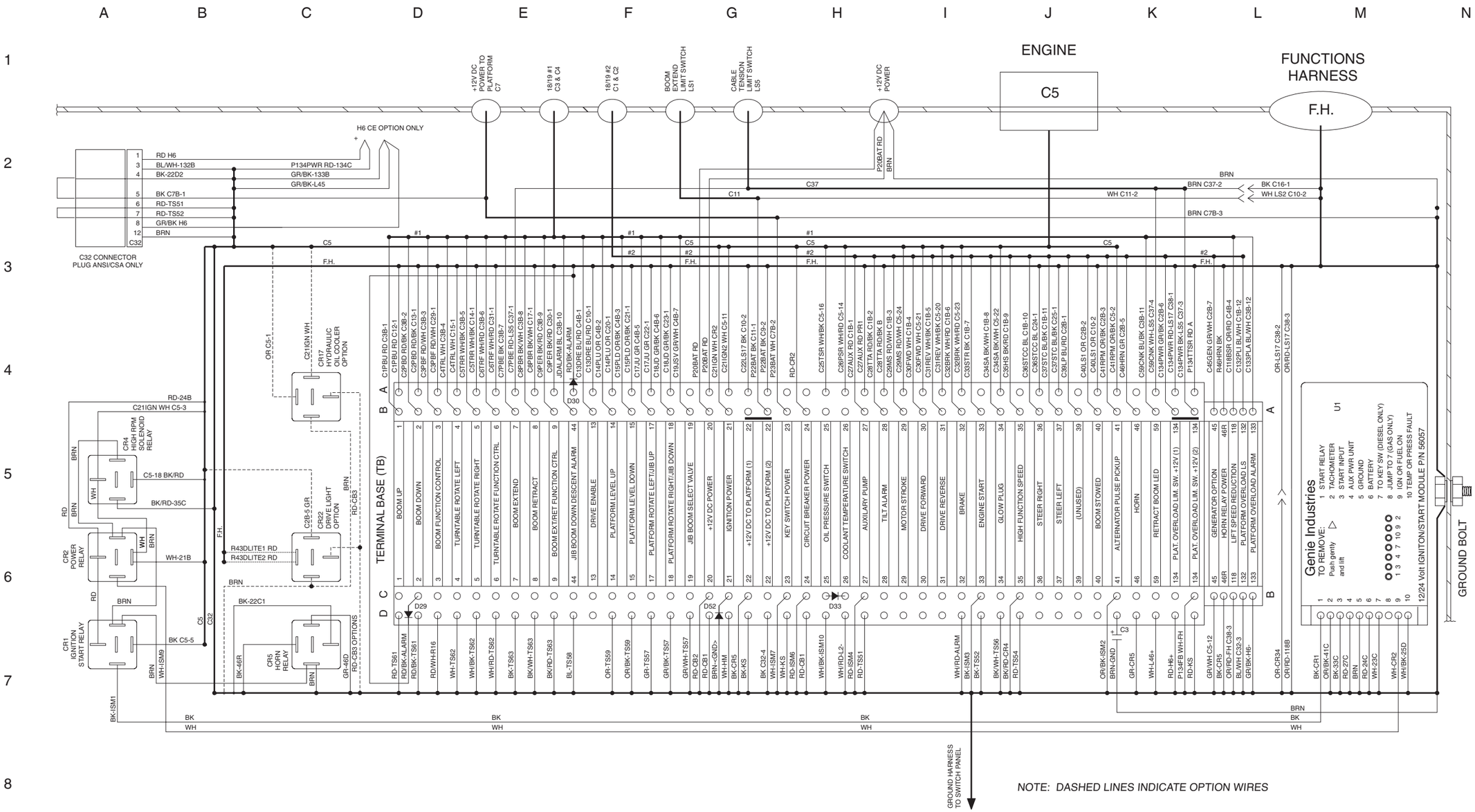

Ground Control Box Switch Panel Wiring Diagram, S-65

Perkins 404-22 Models (before serial number 11880)

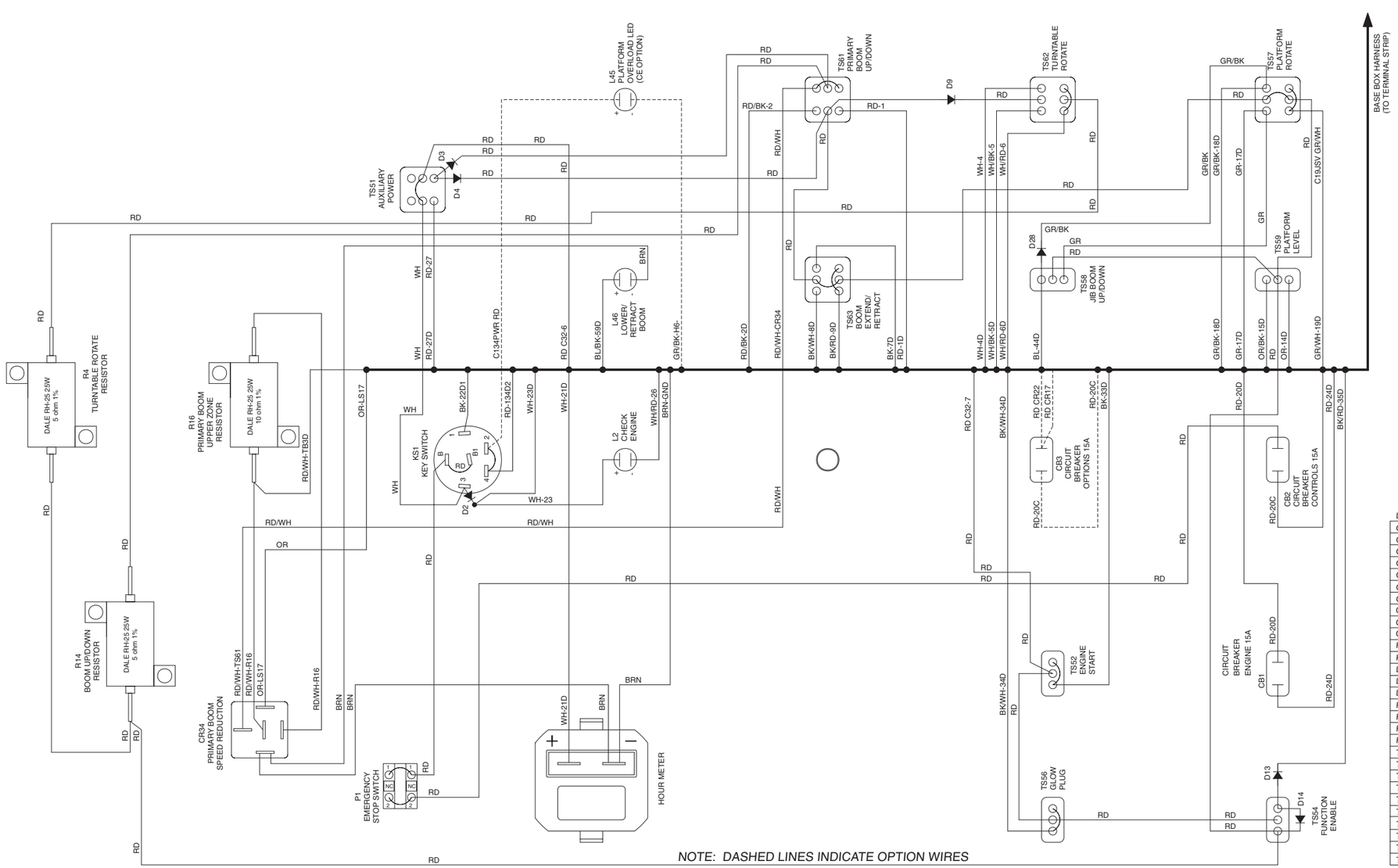

LABEL	DESCRIPTION
CB1	CIRCUIT BREAKER, ENGINE, 15A
CB2	CIRCUIT BREAKER, CONTROLS, 15A
CB3	CIRCUIT BREAKER, OPTIONS, 15A
CR1	IGNITION / START RELAY
CR2	IGNITION POWER RELAY
CR4	HIGH IDLE RELAY
CR5	HORN RELAY
CR17	HYDRAULIC OIL COOLER RELAY
CR22	DRIVE LIGHT RELAY (OPTION)
CR34	BOOM SPEED REDUCTION RELAY
HM	HOUR METER
KS1	KEY SWITCH
L2	CHECK ENGINE LED
L46	LOWER/RETRACT BOOM LED
L45	PLATFORM OVERLOAD LED (CE OPTION)
P1	EMERGENCY STOP BUTTON
R4	SPEED LIMITING RESISTOR 5 OHMS
R14	SPEED LIMITING RESISTOR 5 OHMS
R16	SPEED LIMITING RESISTOR 10 OHMS
TS51	AUXILIARY TOGGLE SWITCH
TS52	ENGINE START TOGGLE SWITCH
TS54	FUNCTION ENABLE TOGGLE SWITCH
TS56	GLOW PLUG TOGGLE SWITCH
TS57	PLATFORM ROTATE TOGGLE SWITCH
TS58	JIB BOOM UP/DOWN TOGGLE SWITCH
TS59	PLATFORM LEVEL TOGGLE SWITCH
TS61	BOOM UP/DOWN TOGGLE SWITCH
TS62	TURNTABLE ROTATE TOGGLE SWITCH
TS63	BOOM EXTEND/RETRACT TOGGLE SWITCH

Ground Control Box Switch Panel Wiring Diagram, S-65

Perkins 404-22 Models (before serial number 11880)

Ground Control Box Terminal Strip Wiring Diagram, S-65

Perkins 404-22 Models (after serial number 11879)

Ground Control Box Terminal Strip Wiring Diagram, S-65

Perkins 404-22 Models (after serial number 11879)

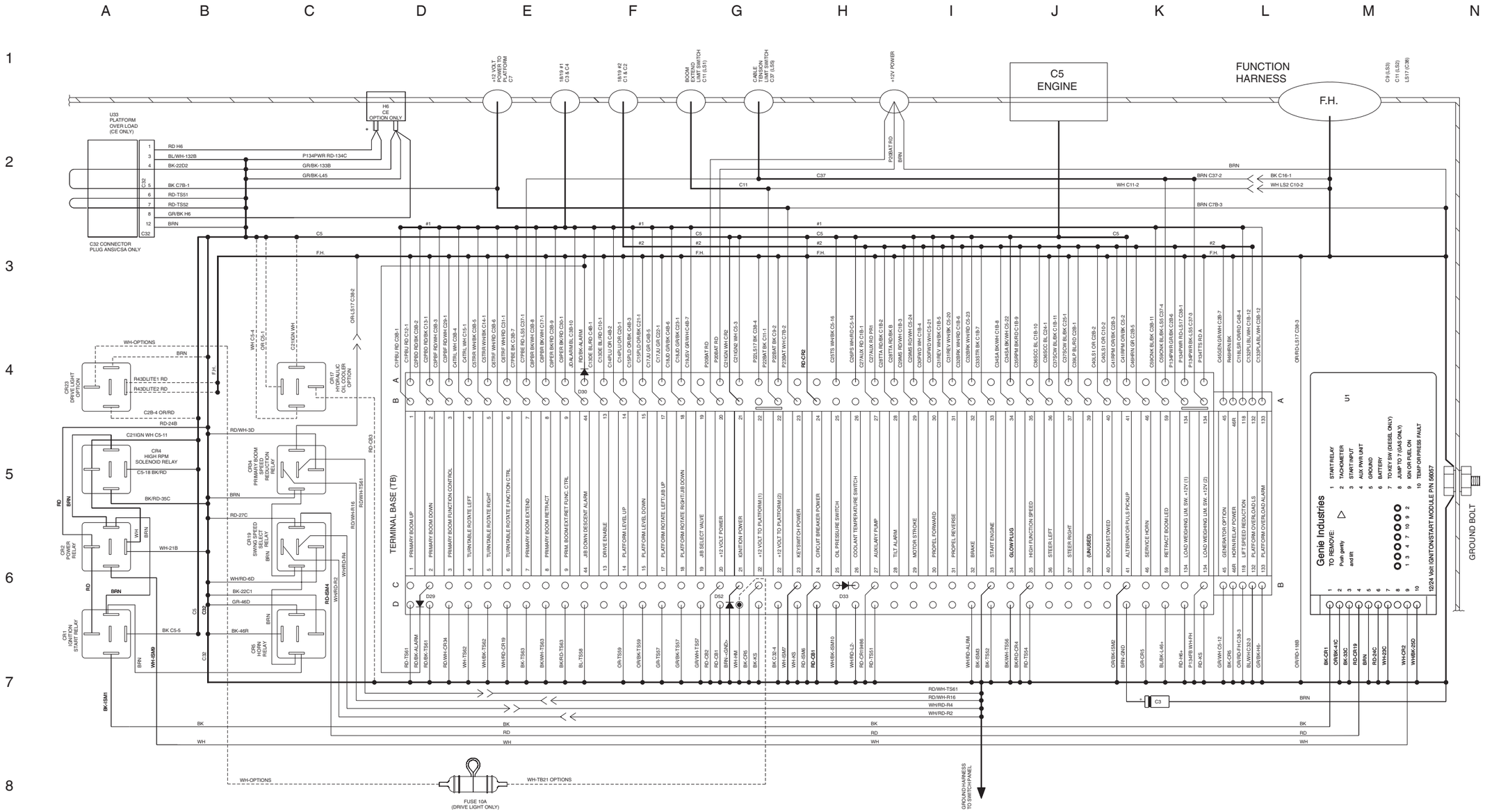

Ground Control Box Switch Panel Wiring Diagram, S-65

Perkins 404-22 Models (after serial number 11879)

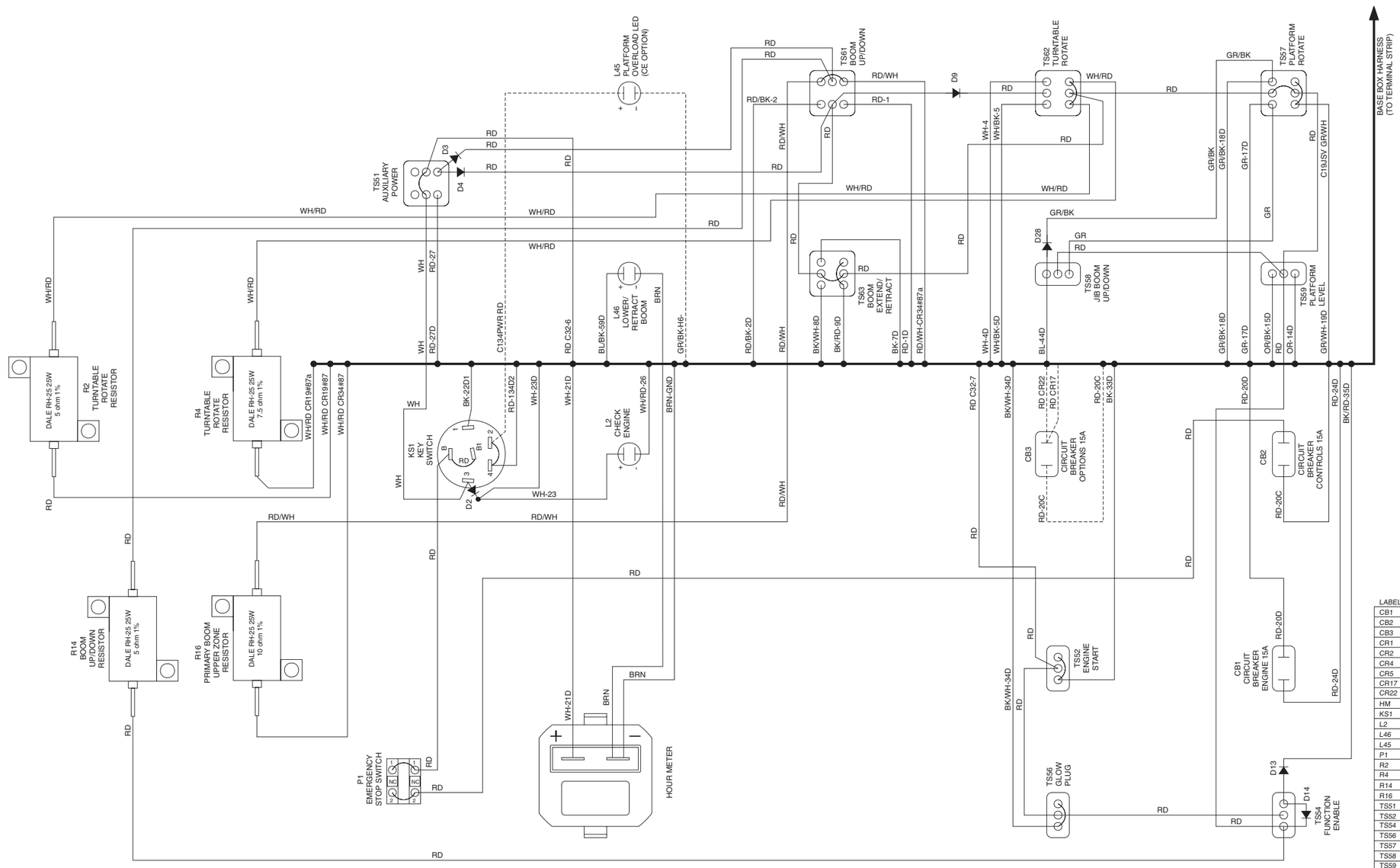

LABEL	DESCRIPTION
CB1	CIRCUIT BREAKER, ENGINE, 15A
CB2	CIRCUIT BREAKER, CONTROLS, 15A
CB3	CIRCUIT BREAKER, OPTIONS, 15A
CR1	IGNITION / START RELAY
CR2	IGNITION POWER RELAY
CR4	HIGH IDLE RELAY
CR5	HORN RELAY
CR17	HYDRAULIC OIL COOLER FAN RELAY
CR22	DRIVE LIGHT RELAY (OPTION)
HM	HOUR METER
KS1	KEY SWITCH
L2	CHECK ENGINE LED
L46	LOWER/RETRACT BOOM LED
L45	PLATFORM OVERLOAD LED (CE OPTION)
P1	EMERGENCY STOP BUTTON
R2	SPEED LIMITING RESISTOR 5 OHMS
R4	SPEED LIMITING RESISTOR 7.5 OHMS
R14	SPEED LIMITING RESISTOR 5 OHMS
R16	SPEED LIMITING RESISTOR 10 OHMS
TS51	AUXILIARY POWER TOGGLE SWITCH
TS52	ENGINE START TOGGLE SWITCH
TS54	FUNCTION ENABLE SWITCH
TS56	GLOW PLUG TOGGLE SWITCH
TS57	PLATFORM ROTATE TOGGLE SWITCH
TS58	JIB BOOM TOGGLE SWITCH
TS59	PLATFORM LEVEL TOGGLE SWITCH
TS61	PRIMARY BOOM UP/DOWN TOGGLE SWITCH
TS62	TURNTABLE ROTATE TOGGLE SWITCH
TS63	BOOM EXTEND/RETRACT TOGGLE SWITCH

NOTE: DASHED LINES INDICATE OPTION WIRES

Ground Control Box Switch Panel Wiring Diagram, S-65

Perkins 404-22 Models (after serial number 11879)

Platform Control Box Wiring Diagram, S-65

Perkins 404-22 Models

Platform Control Box Wiring Diagram, S-65

Perkins 404-22 Models

ITEM	DESCRIPTION
H1	TILT ALARM
C7P	12V DC PLATFORM POWER CONNECTOR
C9	FOOTSWITCH CONNECTOR
C1P-C4P	48 PIN CONNECTOR BLOCK
U13	ALC-500 CONTROL BOARD
J1	CONTROL BOARD INPUT CONNECTOR
J2	CONTROL BOARD OUTPUT CONNECTOR
J3	CONTROL BOARD POWER CONNECTOR
CR27	CONTROL RELAY (CE OPTION)
CR30	CONTROL RELAY (CE OPTION)
LS18	LOAD SENSE LIMIT SWITCH

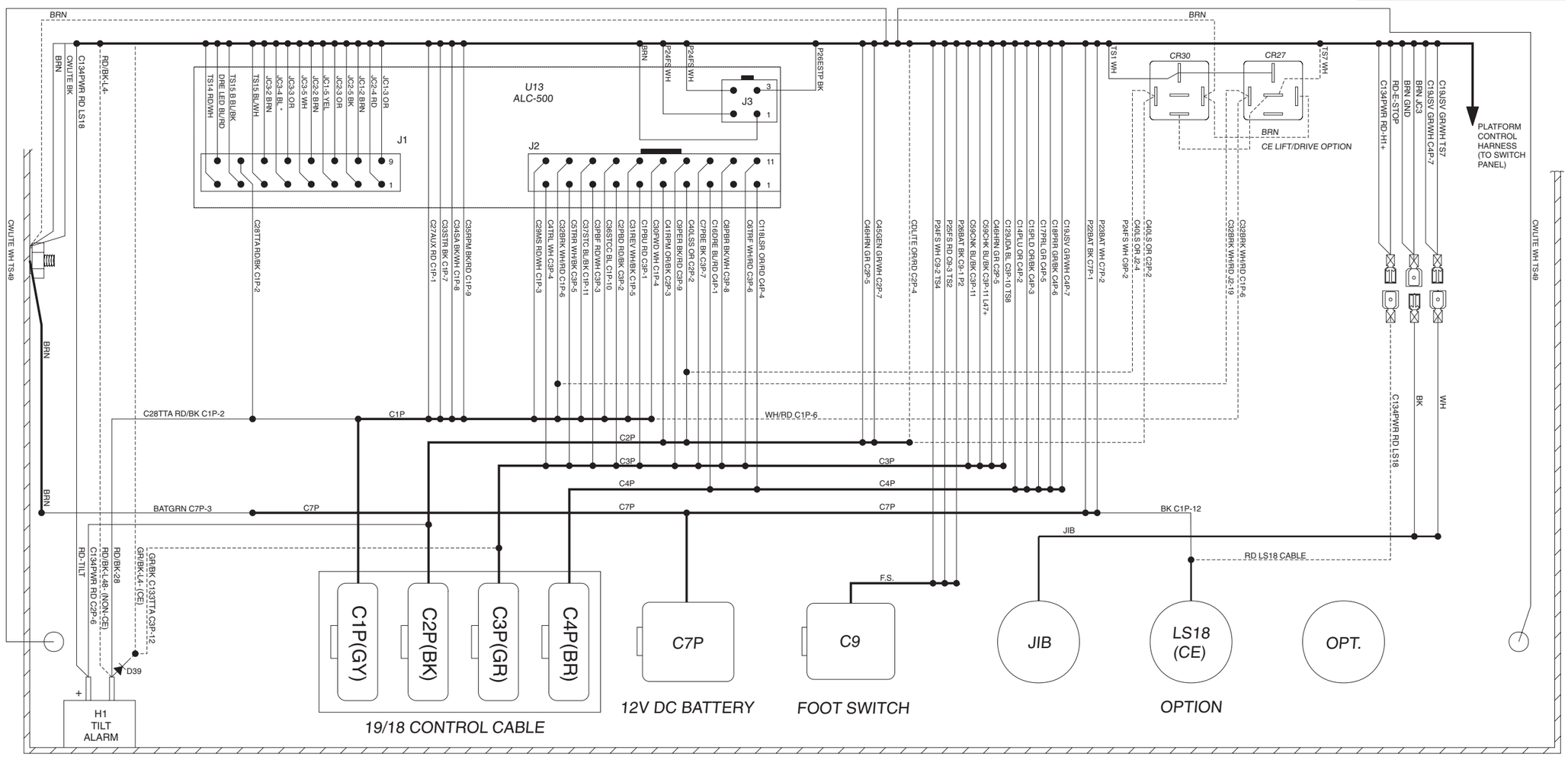

Platform Control Box Switch Panel Wiring Diagram, S-65

Perkins 404-22 Models

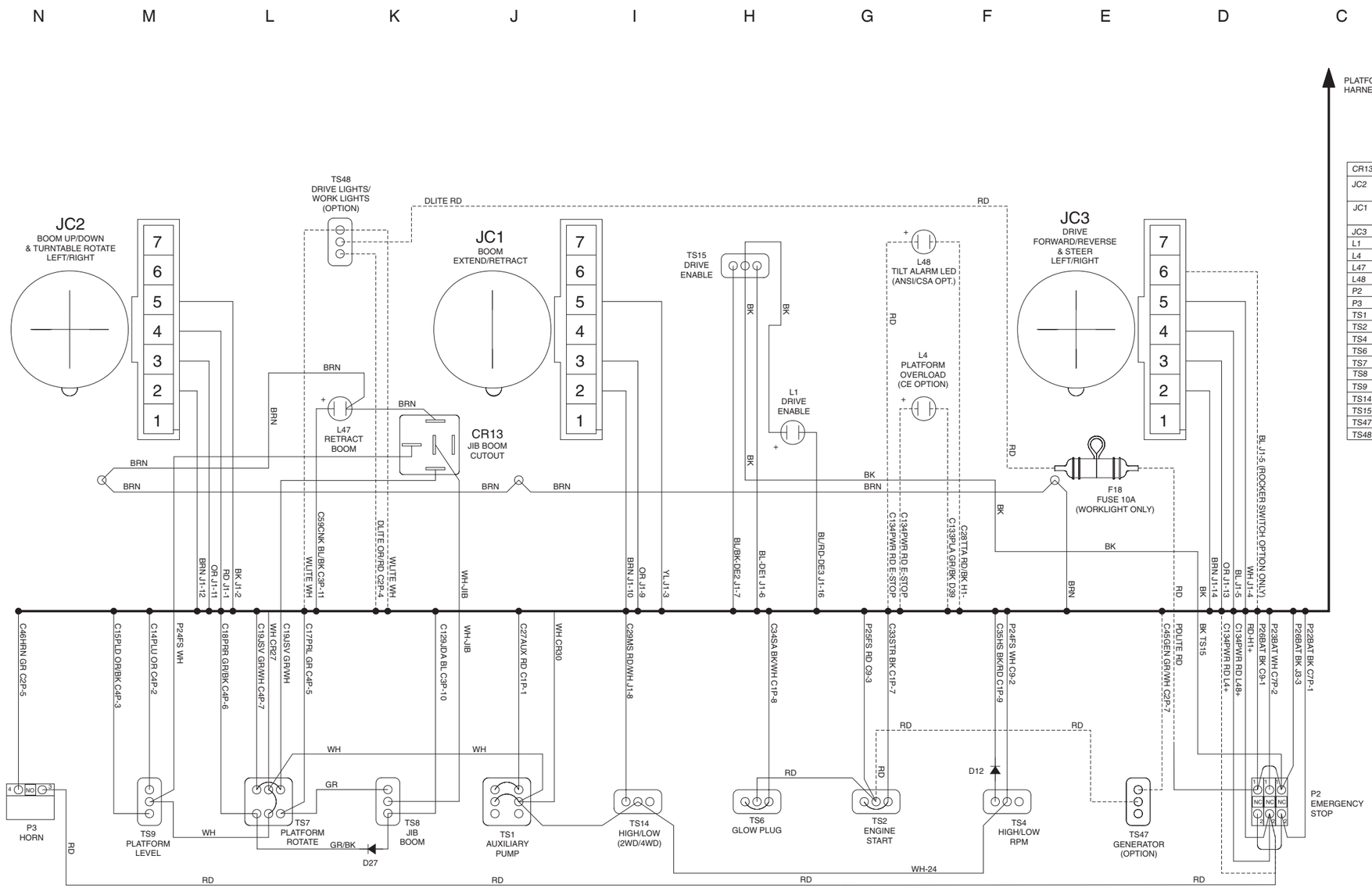

COMPONENT INDEX

CR13	*JIB BOOM CUTOUT RELAY*
JC2	*BOOM PROPORTIONAL JOYSTICK: BOOM UP/DOWN , TURNTABLE ROTATE*
JC1	*BOOM PROPORTIONAL JOYSTICK: BOOM EXTEND/RETRACT*
JC3	*DRIVE/STEER PROPORTIONAL JOYSTICK*
L1	*DRIVE ENABLE LED*
L4	*PLATFORM OVERLOAD LED*
L47	*LOWER/RETRACT BOOM LED*
L48	*BOOM TILTED LED*
P2	*EMERGENCY STOP BUTTON*
P3	*HORN SWITCH*
TS1	*AUXILIARY TOGGLE SWITCH*
TS2	*ENGINE START TOGGLE SWITCH*
TS4	*HI/LOW RPM TOGGLE SWITCH*
TS6	*GLOW PLUG TOGGLE SWITCH*
TS7	*PLATFORM ROTATE TOGGLE SWITCH*
TS8	*JIB BOOM UP/DOWN TOGGLE SWITCH*
TS9	*PLATFORM LEVEL TOGGLE SWITCH*
TS14	*DRIVE SPEED TOGGLE SWITCH*
TS15	*DRIVE ENABLE TOGGLE SWITCH*
TS47	*GENERATOR TOGGLE SWITCH (OPTION)*
TS48	*DRIVE LIGHT/WORK LIGHT TOGGLE SWITCH (OPTION)*

NOTE: DASHED LINES INDICATE OPTION WIRES

Platform Control Box Switch Panel Wiring Diagram, S-65

Perkins 404-22 Models

Belt Driven Generator Wiring Diagram

N M L K J I H G F E D C B A

1 2 3 4 5 6 7 8

120V AC W/REGULATOR

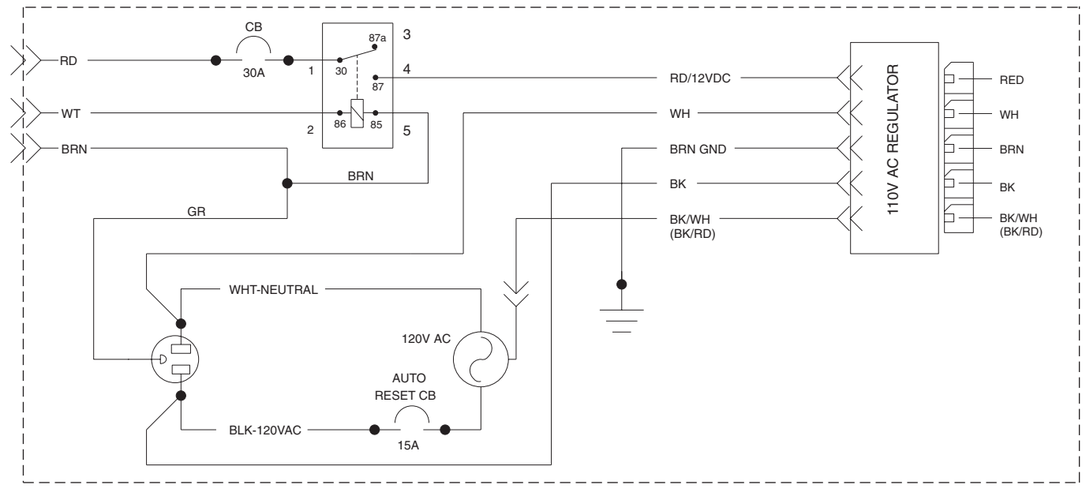

120V AC W/O REGULATOR

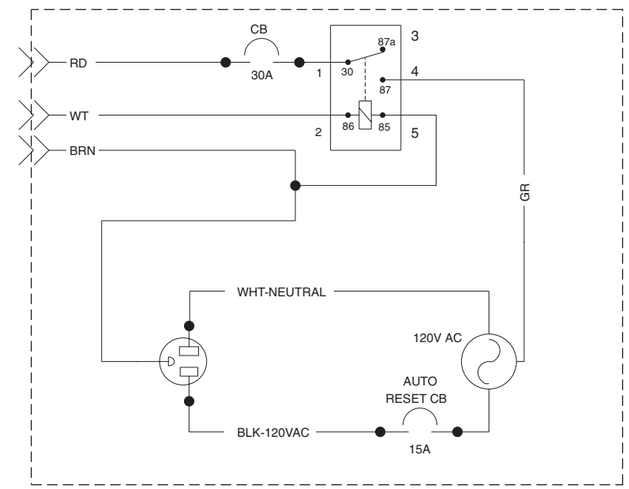

220V AC W/REGULATOR

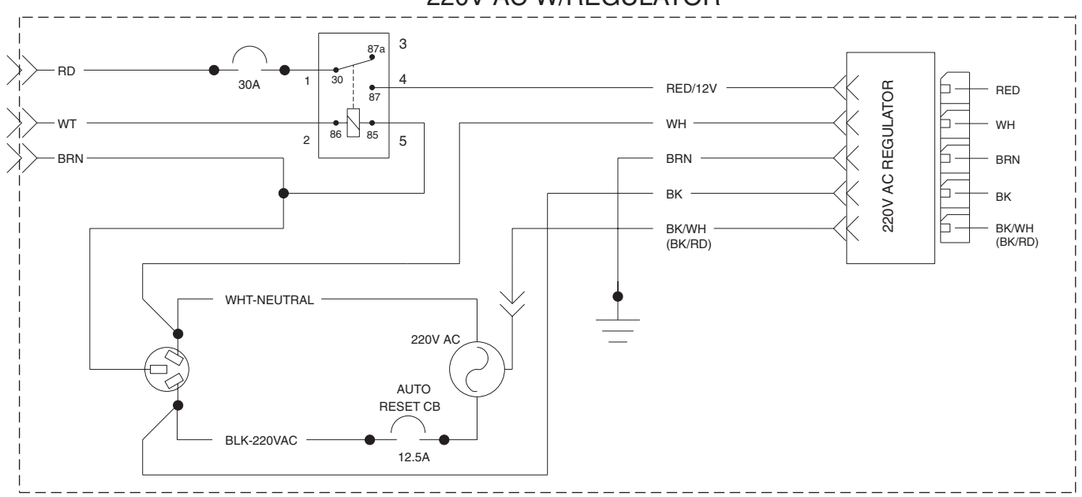

Belt Driven Generator Wiring Diagram

12kW Hydraulic Generator Option Wiring Diagram

12kW Hydraulic Generator Option Wiring Diagram

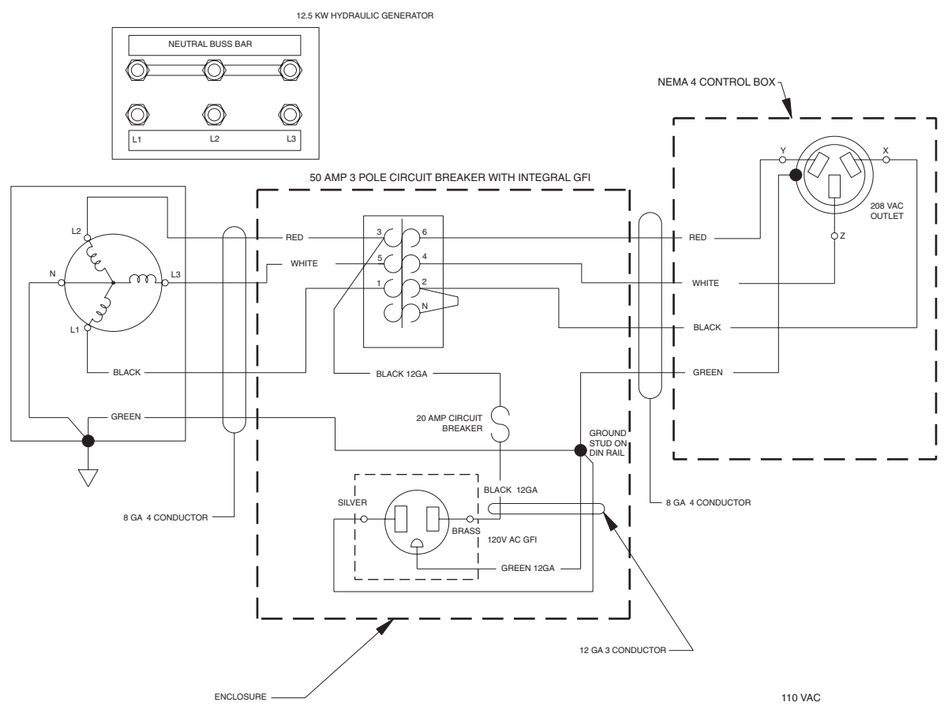

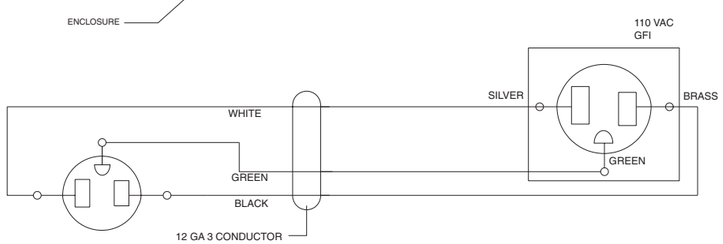

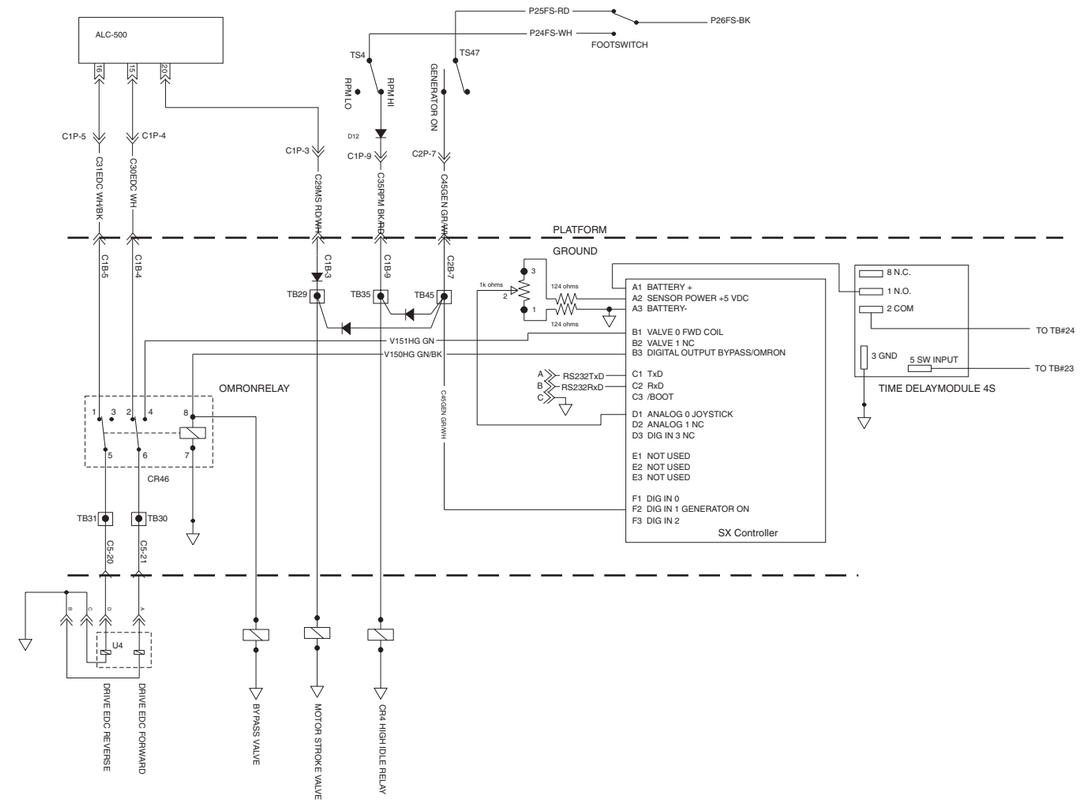

1. Turning on the Generator supplies current to the high idle relay through the diode switching the engine to high RPM. In addition the diode between TB45 and TB29 supplies power to the motor stroke valve switching the motors to high speed/low torque mode.

2. The SX controller is turned ON supplying power to bypass valve and the change over relay. The EDC valve is switched over to the output of the SX controller.

3. When the AC generator is turned OFF the SX module will ramp the output to the EDC to threshold preventing cavitation to the hydraulic motor powering the generator. When threshold is reached the bypass valve is turned OFF.

Harness			Inside Enclosure
PIN#	COLOR	CKT#	COLOR
1	BR	GND	WH/RD
2	WH	C30EDC+	WH
3	WH/BK	C31EDC-	WH/BK
4	BR	GND	BK/RD
5	BR	GND	BL/RD
6	WH	C30EDC+(A)	RD
7	WH/BK	C31EDC-(A)	RD/BK
8	BR	GND	OR/RD
9	GR/WH	C45GEN	GR/WH
10	GR/BK	V150HG	GR/BK
11	WH	C22PWR	RD/WH
12	BR	GND	GR

Hydraulic Schematic, 12kW Hydraulic Generator Option

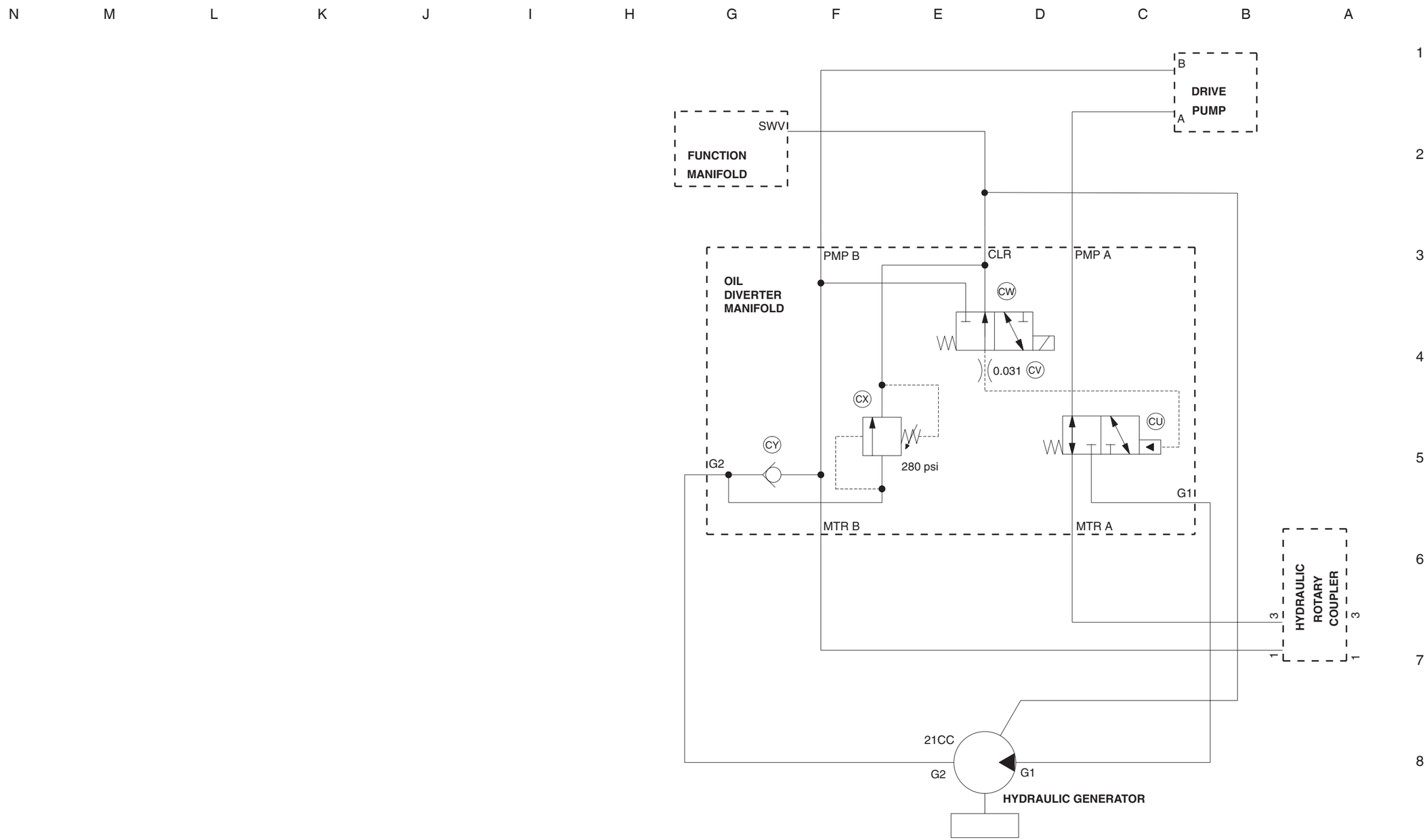

Hydraulic Schematic, 12kW Hydraulic Generator Option

Hydraulic Schematic, 2WD Models

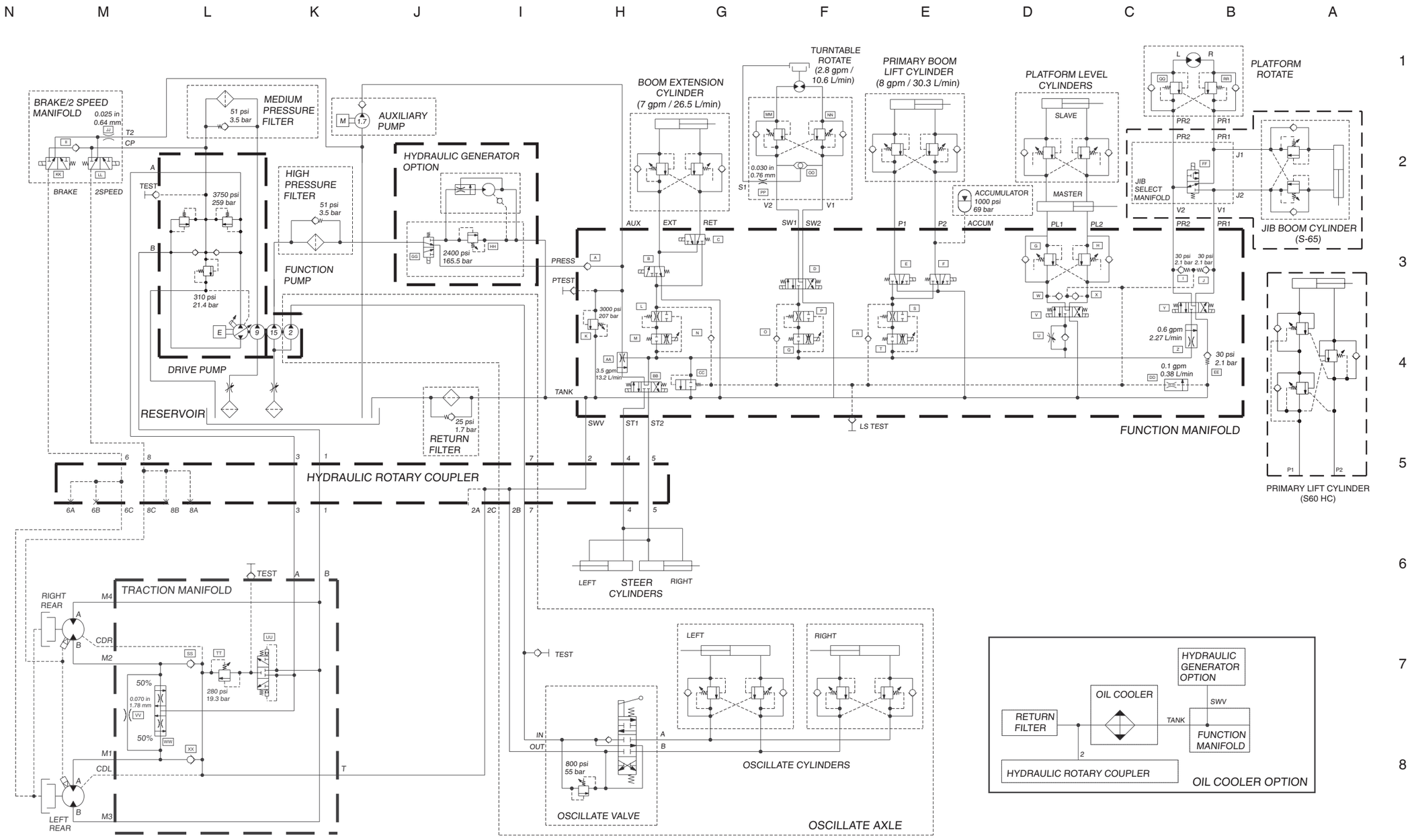

Hydraulic Schematic, 2WD Models

Hydraulic Schematic, 4WD Models

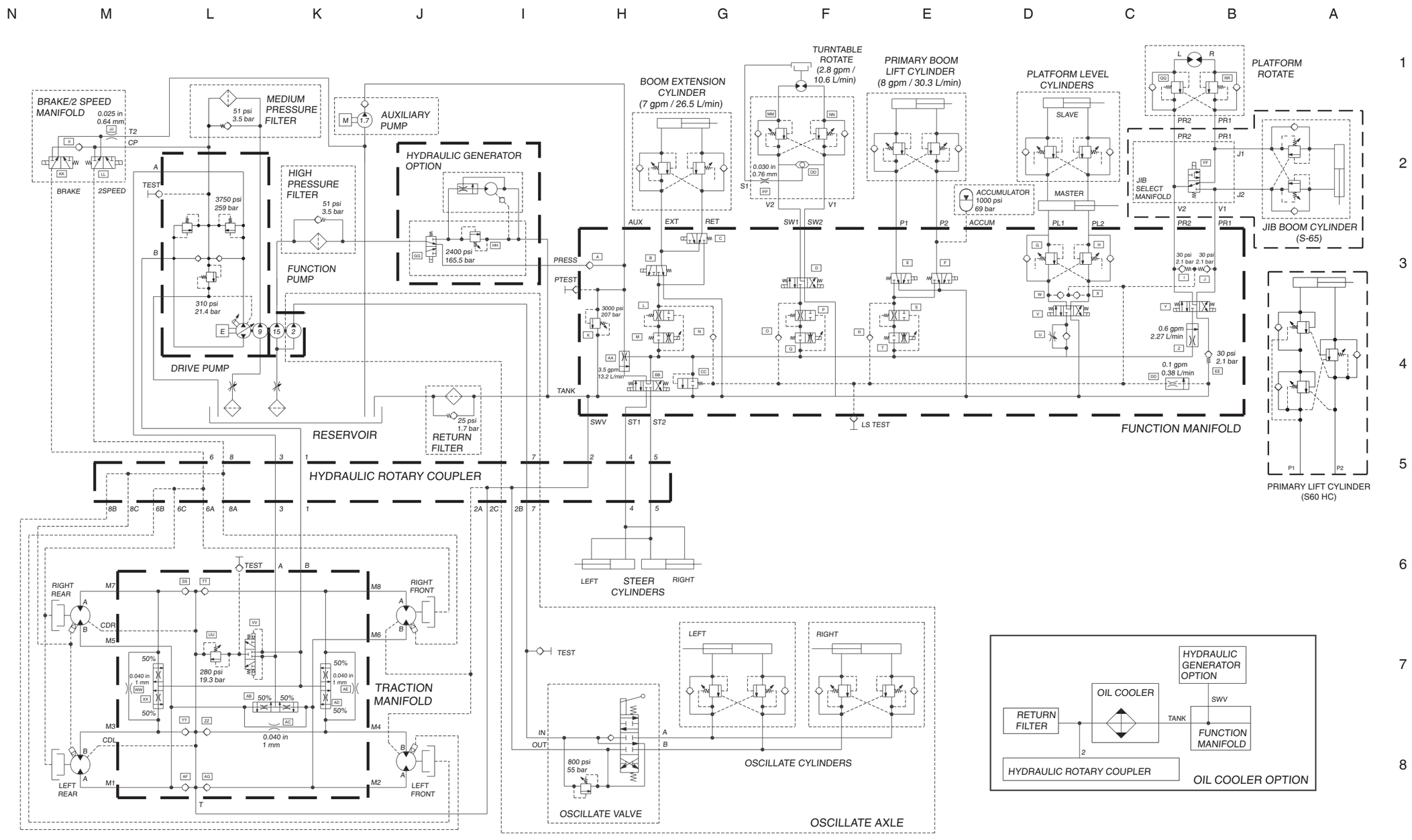

Hydraulic Schematic, 4WD Models

California Proposition 65

Warning

The exhaust from this product contains chemicals known to the State of California to cause cancer, birth defects or other reproductive harm.

Distributed By:

Genie North America
Phone 425.881.1800
Toll Free USA and Canada 800.536.1800
Fax 425.883.3475

Genie Australia Pty Ltd.
Phone +61 7 3375 1660
Fax +61 7 3375 1002

Genie China
Phone +86 21 53853768
Fax +86 21 53852569

Genie Singapore
Phone +65 67533544
Fax +65 67533544

Genie Japan
Phone +81 3 6436 2020
Fax +81 3 5445 1231

Genie Korea
Phone +82 2 558 7267
Fax +82 2 558 3910

Genie Brasil
Phone +55 11 4082 5600
Fax +55 22 4082 5630

Genie Holland
Phone +31 183 581 102
Fax +31 183 581 566

Genie Sweden
Phone 0046 3157 5101
Fax 0046 3157 5104

Genie France
Phone 0033 237 260 986
Fax 0033 237 260 998

Genie Iberica
Phone 0034 900 808 110
Fax 0034 935 725 080

Genie Germany
Phone 0800 180 9017
Phone 0049 4221 491 821
Fax 0049 4221 491 820

Genie U.K.
Phone 0044 1476 584 333
Fax 0044 1476 584 330

Genie Mexico City
Phone +52 55 5666 5242
Fax +52 55 5666 3241